Harbor Commission

Regular Meeting Agenda

Tuesday, November 18, 2014, 5:30 p.m.
Council Chambers, South Haven City Hall

City of South Haven

Please note that the meeting will be held in South Haven City Hall, Council Chambers.

1. Call to Order

Roll Call: Chairman Jeff Arnold, Vice-Chairman Mary Stephens, Cathy Pyle, Tim Reineck, Alan Silverman, Daniel Strong, Greg Sullivan.

2. Approval of Agenda

3. Approval of Minutes: September 16, 2014 Regular Meeting
September 30, 2014 Workshop Meeting

4. Interested Citizens in the Audience Will be Heard on Items Not on the Agenda

5. Marina Reports

6. Strategic Plan

7. Dyckman Bridge

8. Marina Audit

<u>Member and Staff Comments</u>

Adjourn

RESPECTFULLY SUBMITTED,
Paul VandenBosch
Secretary, Harbor Commission

Harbor Commission

Regular Meeting Minutes

Tuesday, September 16, 2014, 5:30 p.m.
Council Chambers, South Haven City Hall

City of South Haven

1. Call to Order by Arnold at 5:30 p.m.

Present: Pyle, Silverman, Stephens, Strong, Sullivan, Arnold
Absent: Tim Reineck

Also present: Ron Wise, Fire Chief; Tony Marsala, Deputy Chief/Fire Marshall; Larry Halberstadt, City Engineer

2. Approval of Agenda

Motion by Stephens, second by Pyle to approve the September 16, 2014 agenda as presented.

All in favor. Motion carried.

3. Approval of Minutes: August 19, 2014 Regular Meeting

Motion by Stephens, second by Sullivan to approve the August 19, 2014 regular meeting minutes with corrections.

All in favor. Motion carried.

4. Interested Citizens in the Audience Will be Heard on Items Not on the Agenda

None

5. Marina Reports

VandenBosch reviewed the Marina Reports. Noted the increase in Seasonal Marina Revenue for the calendar year; above all previous years. Also pointed out that when seasonal dock revenue goes up at Black River Park that leaves fewer docks for transients.

VandenBosch commented that water levels are just below average, still, but looking better than last year and that there was a fairly heavy storm last Monday with waves that went from two (2) to three (3) feet to eleven (11) feet in a matter of hours, with some damage to boats at the Marina.

6. Fireboat Discussion

Tony Marsala, Deputy Chief/Fire Marshall. Reported on the feasibility of having the fire boat stay in the marina during the summer season as requested by the commission. Described the boat and how it operates; noted problems that could arise during time in the water including possible fouling of the intake and nozzle and algae on pontoons; detailed how some of these problems could be eliminated by having a lift with an enclosure for top and sides, chaps and other covers. Marsala also noted that maintenance is currently being monitored at the station; commented on the cost of man hours away from the station to maintain the boat on site at the marina; gave historical information of the boat and noted that the boat has been called for service, on average, a little over twice a year.

Marsala noted that staff performed timed response simulations to a call received; from hitching the boat to an available truck at the station to having the boat in the water and running took between nine (9) to eleven (11) minutes.

Marsala explained that the used Magnum boat lift, available for $1,500, needs new cables at a cost of $400 to $500 if all sheaves are okay. Marsala also contacted Magnum to get quotes on a new Magnum boat lift and Leaders Marine provided prices for a new lift enclosure for top and sides which has manual operation in case of power outage.

Marsala does not think very much time could be cut off the readiness of the boat if the boat is up in a lift. The one way cycle time for a lift is twenty-four (24) inches per minute. Feels that it would not cut much time off the current time needed for launching of the boat starting at the station. Marsala's conclusion is that the costs and time indicates that it is better to leave the boat where it is.

Discussion ensued regarding whether the lift has to be removed every fall. More information is needed about the used lift to determine if it would need to be removed. The lift from Leaders would have to be removed.

VandenBosch asked who makes the decision regarding whether to stay with the dry storage or purchase a used or new lift and have it installed. Chief Ron Wise responded that the board generally leaves the day to day decision making up to him, but this decision would probably be made by a combination of the South Haven Area Emergency Services (SHAES) board and him.

Marsala pointed out that maintenance fees would be more costly in sending two (2) men down to the marina with the necessary equipment to inspect and maintain the boat.

VandenBosch said the time estimate seems to him to be fairly quick and asked how long it takes, on average, to respond to a fire in the city. Wise noted that it takes from three (3) to four (4) minutes to get to a structure fire in the city with a truck. Wise said the bridge is sometimes a problem with time. Township structure fires can be more like eleven (11) minutes response time, depending on weather and traffic.

Marsala noted that lines at the gate and other boats launching could add to the time needed. Sullivan wondered if it could be arranged to get someone to go ahead of the fire boat to clear the way. VandenBosch gave his permission if there's a line at the gate to break through the exit gate. Marsala said if there were multiple calls, particularly a medical call, all of those estimates could change.

VandenBosch pointed out that the maintenance would be less in dry storage and noted even if stored above the water there can be potential humidity damage.

Wise noted that the Sheriff's marine patrol has a boat in the water. "That is a very valuable piece to have in the river for life safety."

Strong asked if it is the chief's opinion that the boat would be better off in the dry storage and both Marsala and Wise agreed that considering maintenance and costs involved the best place to keep the boat is in dry storage.

7. Bridge Reconstruction

VandenBosch noted that during the bridge reconstruction the city will permit people to store their boats upriver of the bridge so they can get their boats out of the water.

Larry Halberstadt, City Engineer: Pointed out the press release in commissioners' packet. Explained that the contractor plans to start around October 1st. Noted that the channel will be open until midnight on October 14th and work will start on October 15th. There may be a barge with a crane on it in the river; there is some steel work that needs to be done on the bridge structure.

Silverman asked about the date. Halberstadt said according to federal regulations the bridge tender must be in attendance through October 14th. Silverman and Stephens suggested that the city needs to make it clear that the bridge will be closed on October 15th. Halberstadt assured that in the case of boats still being upriver on the 15th, the city will work with the contractor to be sure any late stragglers get through; there is no intention to leave anyone stranded.

VandenBosch wondered when staff will find out where the contractor will place the barge and how quickly removal of the equipment will begin. Halberstadt noted that if there is any opportunity to extend the season beyond October 15th, the city plans to do that. Halberstadt thinks the contractors are still working out when the various activities will take place.

Pyle pointed out that this time of year and in spring there are major runs; salmon, steelhead and brown trout. The biggest question in her store has been whether fishermen will be able to get through. Halberstadt said it will be a forty foot (40') wide barge while the main navigation channel is about sixty feet (60'); a sixteen foot (16') shallow draft boat should be able to get around without any issues.

VandenBosch asked whether the project includes lights to let people know when the bridge is going to open and video for the bridge tender. Halberstadt stated that new navigation lighting will be put on the bridge; there will be additional lights at channel level, in addition to replacing the existing lights. "There will be four (4) video cameras being installed on the bridge, allowing the bridge tender to see approaching traffic from both directions on both bridge and river."

Silverman suggested having the contractor have lights on the barge during the construction.

8. Capital Improvement Plan

VandenBosch pointed out the Capital Improvement Plan on page twenty (20) which lists projects staff would like to do, with a very rough estimate of cost, indicating future years and estimates of how the funding may be available.

Two projects VandenBosch would like to apply for grants for are the South Side building renovation from the Waterways Commission, which requires a fifty percent (50%) match and the South Side Dock Extension and Wave Attenuation study, an engineering study to help us understand how we could reduce surge on our South Side and potentially North Side. Staff would also like to know how such a project might affect other parts of the harbor. VandenBosch thinks a floating dock with wave attenuation hulls underneath is probably an ideal idea but would like an engineer to look at it and tell us how it works; what the effects would be; whether it would have to be removed every year and how much it would cost.

The Maritime Museum Dock Replacement, shown as two (2) years from now, is also a grant application and the South Side dock project is related to the wave attenuation study, according to VandenBosch. The South Side Headwall Electric Upgrade is about one (1) year out. VandenBosch noted that the projects are kind of staggered. While staff does not expect to get all these grants or that this timeline is a perfect representation of what will actually happen, but it gives an idea of what would be spent and what the cash flow impact is on the Marina Fund.

Black River Park Fund. VandenBosch noted that the new fish cleaning station plan has been broken up into smaller pieces because the maximum grant that is easy to get is $300,000 from Waterways, so the city could not apply for the entire thing as one project. The Waterways Commission does not pay for fish cleaning stations. We would apply to Great Lakes Fisheries for the fish cleaning station.

The Black River Park Driveway Improvements does not include the parking lot but includes just about everything else, according to VandenBosch, who explained that the project may need to be scaled back, or there may be extra money.

The Black River Park Boat Launch Restroom project could fall under the Recreation Passport Grant. This grant requires a twenty-five percent (25%) match and bid specs will need to be prepared for renovations that will not exceed a $45,000 cost estimate.

VandenBosch explained that he included numbers on dredging because this Five Year Plan is something new, required by the Waterways Commission, and VandenBosch wanted to have something about dredging in the plan. VandenBosch is not confident of these figures for dredging but noted that it is roughly what could be expected.

Stephens asked if the dredging figure includes applying for permits. VandenBosch explained the city has a long term dredging contract to which he added a little bit. Permits are in place through 2016 with another a little later. This plan does not have acquisition of land for dredge spoil which could be a big issue, according to VandenBosch, but for this Capital Improvement Plan, these projects are what staff spent time on; the dredging figure is in there to show Waterways that the city is making a plan for dredging.

VandenBosch noted that the staff at Black River Park is very good at fixing and improving things so he wants to make sure they have some money to do that.

In response to questions, VandenBosch stated he would like to get a motion so approval by the Harbor Commission can be included when the grants are applied for.

VandenBosch pointed out the Abonmarche proposal for grant writing noting that in some cases prices to do the engineering have been included. On page 33 there is a list of seven (7) tasks which Abonmarche is prepared to pursue as directed by the Harbor Commission. The seventh (7th) item is to pave the gravel lot we created. VandenBosch hopes the Downtown Development Authority (DDA) or City Council General Fund) will partner with us to get that paved; the parking lot would definitely benefit the downtown and is a little above what the Harbor Commission can afford.

VandenBosch also pointed out that page 33 noted that the design is for bidding and construction after we get the grant. At this time we would only want to authorize the grant portion, generally the smaller number of the two.

Stephens asked if there is no plan or place to put dredge spoils. VandenBosch said above the bridge tested clean so those spoils can be put anywhere. “Downstream, we have a later discussion item that the Army Corps can provide dredging at almost half price, however, they may only do work in the federal channel and turning basin. I don’t think their equipment can get inside marinas and inside pilings, so we would still have to find a way to get marinas dredged and dispose of that material. It can always go to a landfill, although it is more expensive. The trucking is the cost that impacts us. There are ways to get all the dredging done, in some cases cheaper and in some cases more expensive.”

Stephens asked if the commission should consider reflecting in this time line the need for purchasing land for dredge spoils or paying for the cost of removing it. VandenBosch explained that the issue he sees is that it is very difficult to identify land where dredge spoil can be placed, noting that the hill on Blue Star is getting quite high. Stephens asked if the costs for land or trucking should be included when discussing dredging. VandenBosch said that would be wise, but the focus of this plan is Black River Park and the Southside Marina. VandenBosch also noted, on page 28, this is the way long range planning for dredging is done and agrees that staff does need to start looking for funds to do those things.

Sullivan asked if we are just telling the Waterways an idea of what we would like to do, helps organize us, this could always change. VandenBosch agreed. Sullivan asked if we should put a little more emphasis on dredging so staff knows that is a priority. VandenBosch noted that complete dredging has been done at this point; “We’re in good shape; that could change.”

In response to a question by Silverman, VandenBosch clarified that he is just covering the bases by putting that number in there.

VandenBosch noted that if one looks at the numbers of other grantees Waterways will be looking at, South Haven is ahead of many of the others. The city already has a long term dredging plan in place. Stephens asked if grants were received for the dredging done last year to which VandenBosch responded, “Yes, perhaps you could ask for money for dredging for year five (5). We like to hope that we won’t have to dredge for another five (5) years. We could have things silt up and we might have to do some spot-dredging.”

After discussion regarding the pros and cons of purchasing land to put dredge spoils on versus paying for trucking to a land fill, Pyle commented there are so many costs and liabilities

associated with purchasing land and maintaining it, that the cost of trucking might be the better way.

Silverman asked if the motion VandenBosch is calling for is to support the Capital Improvement Plan to which VandenBosch responded, "Yes, I'd like the Harbor Commission to approve the Capital Improvement Plan." VandenBosch would like to go ahead and authorize Abonmarche to start work on the grant applications.

Motion by Silverman to recommend to city council the approval of the South Haven Harbor Capital Improvement Plan as reflected in the report provided by staff today. Second by Strong.

All in favor. Motion carried.

Motion by Stephens that city staff proceed in pursuing grant applications as reflected in the report. Second by Silverman.

All in favor. Motion carried.

9. Strategic Plan

VandenBosch marked the plan up to show what items he thought had been completed, noting that a number of items are ongoing, so may have to be addressed again in the future.

Silverman recommended that a workshop be considered that this is something to be done on an annual basis; that staff and the commission would benefit by having the conversation to propose modifications to what has been completed, what is in progress, and any changes that come up during that conversation.

VandenBosch and Silverman noted dates that they will be out of town. VandenBosch will email some possible dates to commissioners.

10. Marina Rates

VandenBosch explained his thoughts regarding the way he presented the rates.

Marina Manager can allow short term dock rentals less than eight (8) hours.

Commercial use of marinas was approved by City Council in July or August; these figures just reflect that policy being in place. VandenBosch explained that allows for charter boats at South Marina and prevented jet skis from using the Black River Boat Launch.

Pyle asked, "If someone is here for a week do the rates go up on the weekend?" to which VandenBosch stated that from July 1st to September 1st the weekends are always higher.

Regarding the first year discount, Silverman asked if the intent is to offer this discount to encourage boaters to go to Black River Park. VandenBosch concurred but stated that when there is a waiting list that discount would not be offered. Implementation of that policy is up to the marina manager.

Stephens asked for details on the list of discounts regarding shallow draft or unused slips being rented for jet skis, kayaks and small boats. “These are typically,” according to VandenBosch, “surge slips on the North Side.”

Pyle asked for an update about trailer storage. VandenBosch said that is going in the contract for Black River Park Marina seasonal boaters. There is already an ordinance that prohibits it, but it has not been enforced. Due to the number of trailers increasing, with the Black River Launch parking lot becoming an empty trailer parking spot, signage will be put up next year to make it clear that trailer parking will not be permitted. VandenBosch will be authorized to issue citations citing the section of the code pertaining to trailer parking. Discussion ensued regarding alternate places where trailers may be legally parked.

Motion by Silverman to recommend to City Council the approval of the resolution setting the seasonal and transient slip rates at South Haven Municipal Marinas. Second by Strong.

All in favor. Motion carried.

11. Pierhead Dredging

VandenBosch asked the Army Corps if they would dredge near the pier heads where the wave action is, if the city paid them and received in response a detailed email of how that might work. VandenBosch noted that ten dollars ($10) per cubic yard is not a bad rate except when one recalls that the Corps used to just do it. VandenBosch’s questions for them are: Can they dredge marinas? What is the minimum project size? noting that there is always a mobilization and demobilization cost. Whatever that is, double that might be the size of the project to consider. VandenBosch asked whether the commission has other questions.

VandenBosch noted he was pleased to see the price and if they are able to do marinas, that is certainly the direction to go.

Sullivan asked if they are doing anything more than dredging, to which VandenBosch responded that the Corps has done soundings every year. Sullivan asked about having them do the hydrology studies regarding wave attenuation, however VandenBosch noted that he does not think the Corps will act as consulting engineers to us’ it is a very different organization.

Silverman asked when the last soundings were which VandenBosch said was spring 2014. Silverman said we have a significant increase since spring. VandenBosch explained the areas the Corps would dredge. Silverman noted that fourteen feet (14’) in the approach is probably not bad, but except for events like the Queen’s Cup there aren’t any vessels he knows of that utilizes that depth.

VandenBosch noted that another question might be, “Can you do 12’ depth on Sheet One and what would the cost be?” Silverman would be surprised if there was a significant portion of at least the channel that is at least 12’ now. VandenBosch noted the concern as always is the high spots and where waves are breaking. The Lake Michigan approach and where the piers come together and any spots that are approaching ten feet (10’) for the Friends Goodwill are what the city needs dredged. VandenBosch will give the Corps an idea of what the city really needs and see if they can reduce the project to that.

<u>Member and Staff Comments</u>

Stephens: Asked if questionnaires are still being used.

Pyle: Commented that she didn't think the cleaning and maintenance around the Black River Parks restrooms was done as well as in the past when Black River Park staff was doing it. Passed on Norm's comments about people knocking tires off their boat trailers from hitting the posts that are there at the gate.

Noted that there is a river tournament on November 22 (normally it is after Thanksgiving) but the docks need to be left in until after that event. VandenBosch will let Ron Dotson know.

Asked if the North Side Fish Cleaning Station is still working. VandenBosch noted that it is not; staff had to take a part off that grinder to put on the other grinder and is still waiting for the part. VandenBosch noted that the missing part is the part that keeps the motor from overheating.

Asked if anyone has taken pictures of the bridge so we will have before pictures. VandenBosch responded that staff would love to have a large inventory of pictures that could be used for a website or print material. John Marple has been looking at photographer portfolios. Silverman will provide the name of a local photographer who does photos for the regattas.

Stephens: Asked for an update about Adventure Water Sports. VandenBosch is not aware that they have been back; the city attorney said if Adventure Water Sports comes in again, VandenBosch can write him a civil infraction based on the pertinent section of the ordinance. That could be taken to court if necessary. Strong questioned whether he would be renting jet skis when there is no staff there.

Adjourn

Motion by Silverman, second by Strong to adjourn at 7:05 p.m.

All in favor. Motion carried.

RESPECTFULLY SUBMITTED,

Marsha Ransom
Recording Secretary

Harbor Commission

Workshop Minutes

Tuesday, September 30, 2014
4:30 p.m., North Side Marina
148 Black River Street, South Haven, Michigan

City of South Haven

1. Call to Order at 6:03 p.m.

Present: Silverman, Stephens, Sullivan, Pyle, Arnold
Absent: Reineck, Strong
Also present: John Marple, Marina Manager

2. The Harbor Commission will hold a workshop to discuss its strategic plan for the harbor.

Mission Statement

VandenBosch read and commented on the mission statement. Minor changes suggested were to replace the words "Black River" with South Haven and correct "it" and "it's" to "its".

Silverman suggested defining what we mean by "South Haven Harbor", which was followed with discussion regarding whether people think of the area from the bridge to the channel as "the river"; the use of "the harbor", "the river", etc. in a general form. Silverman suggested an asterisk or footnote by the words "South Haven Harbor". After the following definition was offered: "Beginning at the entrance to the pier heads, the channel, the harbor and the Black River to the city limits," VandenBosch pointed out that the city now considers Sherman Hills being the end of the city limits. Silverman commented that if someone submitted an application for development along there, the Harbor Commission would go through the navigational assessment as we would do in the harbor itself. VandenBosch will put something together for review.

Goals and Objectives:

VandenBosch noted that some of the following items are ongoing; there may be some that are completed.

A. <u>Safety & Navigation.</u>

1. <u>Dredging Needs of the Harbor</u>

Assess the river conditions – general, ongoing, continuous project with new challenges.

After discussion, it was noted that there seem to be general statements and occasional very specific ideas. Feels the document does not read smoothly. Requested to go through this document and determine what is general and what is specific.

Silverman commented perhaps the general items would remain over a period of time and the specific ones would disappear over time.

Develop a checklist – the board has never done that, and now that we've learned how to get through the permitting and dredging process we could put a checklist together. The term "the process of dredging" was questioned for meaning. VandenBosch thinks that means "getting the dredging done". Sullivan commented that process might include finding sites for dredge spoils. Stephens asked if it would be like an implementation plan, for next time we need to dredge.

Maintain valid permits for maintenance dredging. We currently have a permit. Experience has taught that it takes a long time to get a permit; need to start a year ahead of time.

Delete the comment about dredging being one element of a maintenance program.

Sullivan suggested adding something about "sedimentation traps" and "working with Conservation District." Stephens noted that the Conservation District has a different approach – being proactive about planting native species that prevent erosion and sedimentation. "Investigating proactive means of controlling sediment in the river." Debate ensued regarding whether this is the responsibility of the Harbor Commission. Pyle noted that the DNR is offering very large grants to implement this proactive measure; are we passing that by because no one is taking responsibility for it? Pyle pointed out that our mission statement talks about maintenance. VandenBosch noted it also relates to "navigability" which is our responsibility/mission.

VandenBosch pointed out that prior to the Army Corps stepping back from their responsibility of dredging; the city and Harbor Commission were not involved with dredging.

Stephens reminded about filters for the storm drains as something to consider in the maintenance or preventative program.

Develop recommendations for maintaining ingress and egress **. . .** – Pyle asked if that statement could be part of the checklist. VandenBosch noted this is a general statement, while the details are specific. Suggested that this statement be combined with the first statement in this section.

Apply for . . . grant funding . . . other funding . . . for dredging . . . or other safety improvements - VandenBosch noted the city did get some funding for dredging and were fortunate that the Waterways Commission restated their priorities. General statement. Ways the commission can help: Ask the legislature to fund the Army Corps. Recommend that City Council pass a resolution which can then sent to our senator and representatives. Silverman noted that the

Harbor Commission does not apply for grant funding; VandenBosch noted there is a bit of overlap.

Things have happened due to Harbor Commission recommending activities. Silverman suggested “support efforts to obtain funding” as opposed to “apply for grant funding”.

2. Electrical Utilities.

Encourage all marinas and private slips to upgrade their electrical wiring if they are making any electrical improvements.

Silverman thinks this is odd wording. “Is it within our area of responsibility?” VandenBosch said when people do work they must meet the code. Silverman wondered how the Harbor Commission can encourage electrical upgrades. Silverman wonders whether we need to have any reference to electrical. Sullivan noted he’s been working with an electrician who has told him that there have been deaths related to incorrect wiring across the country. Suggested educating as the commission did with direct fueling. Silverman asked what we can do to educate.

Delete or reword this statement? Replace “marinas and private slips” with “marinas and boat owners” since Sullivan noted that most stray voltage issues seem to originate with boat owners.

After discussion regarding the responsibilities of the Harbor Commission, Silverman read the Harbor Commissions statement in the City Code. VandenBosch asked if river safety is included in that. Stephens said it is a general statement but it seems to include code. VandenBosch suggested including this in the draft for further discussion. What about plumbing, mechanical and building codes? All affect the safety of the harbor.

3. Fueling of Marine Vessels.

VandenBosch said we did quite a bit; educated everybody in the harbor, including himself, fire marshall, marine patrol and the public. Everybody learned what rules apply. Made quite a bit of progress on this but it is ongoing.

Stephens noted that in the city code it says “the Harbor Commission shall with concurrence with the governing agency . . . recommend ordinances to the city.”

VandenBosch noted that when we started working on this there was not a lot of knowledge about how that ordinance should be applied and it was only by this board discussing it that we were all educated.

Discussion ensued whether the electrical issues and other codes (plumbing, building, mechanical) relates to what was done regarding direct fueling. VandenBosch wondered if we added “in the city marinas” would that make the electrical issue more relevant.

Annual electrical safety inspection has been done for several years; the city manager pushes testing for stray voltage each year before the boats get in the water (in the city marinas). Discussion of whether stray current is usually from a boat, which Sullivan stated the electrician he has been in contact with has said stray voltage usually originates with an incorrectly wired boat. Silverman believes we can encourage the city to continue to maintain their electrical system according to standards. Sullivan doesn't see much difference in education for the boaters about direct fueling or electrical safety while Silverman does not believe that our charge is that broad.

4. Emergency Services.

Promote a close working relationship. Meet at least annually to discuss mutual issues related to harbor safety. - Ongoing

VandenBosch noted we have been and probably should continue to work with agencies such as the Sheriff Marine Patrol, Coast Guard, Coast Guard Auxiliary, South Haven Police Department and South Haven Emergency Services.

Review procedures . . .

Encourage agencies to maintain oil absorbent equipment . . .

The city does maintain some oil absorbent equipment, probably could use more.

5. Erosion and Contaminants

Work with the DEQ, DNRE, and Drain Commission etc.

Add the Conservation District to this list.

Later discussion suggested changing the name of this section to read "Erosion, Contaminants and Other Environmental Issues.

Support testing for E.coli and work to resolve any related issues. - Ongoing

The city has been testing for E.coli; we have a grant in to continue to do that. It is very difficult to follow it and make conclusions from the test results due to a time lag in receiving results.

Generally muddy water and high temperatures are indicative of possible presence of E.coli.
It was noted that we do test in the river; we do not allow swimming in the river so other than kayakers and canoers there are not many direct contact issues. The city relies on the county to tell us when the count is too high in the beach area. VandenBosch said the purpose of the E.coli testing is to try to understand how it affects the beaches, not to shut off a section of the river or allow no contact. Pyle asked if you are testing the same area each time to develop a possible

pattern. VandenBosch said it hasn't been very helpful so far, inconclusive, just getting started, but we are writing a grant to do more testing.

Sullivan asked about sewage treatment plant or sanitary system overflows but generally the high E.coli counts are not coming from our system. Discussion of farming, animal feeding practices. VandenBosch stated he does not like to point fingers because currently we do not know where it is coming from.

6. Harbor Traffic Flow and Safety.

Discussion of the lights on the bridge and the video monitor for the bridge tenders due to the upcoming bridge work. Might help with traffic flow and safety. Silverman said he does not see congestion very often; VandenBosch said for the fireworks congestion is an issue but we do have the marine patrol for those times.

Ensure that the channel between the harbor lines is kept clear . . .

Silverman isn't comfortable with the word ensure. Sullivan said that is part of the duties of the harbor master, perhaps change "ensure that" to "support" Silverman said we don't have much to do with it, other than when the materials come before us for a permit, then we make a recommendation. If a dock is built without a permit it is up to the Harbormaster and the building department.

Silverman asked if there was a permit for docks by Oak Harbor. There is now a series of floating docks. Silverman said there are boats in there. VandenBosch will check into that.

Add a light to the bridge . . .
The City Engineer said there will be lights on the bridge. There were questions about how the lights will be set up to signal when the bridge is going to close, or whether there will be red and green lights for boats coming up and down river. Silverman said we should have the answers to those questions before they complete that bridge work as this directly impacts navigation and safety.

7. Public access.

Support public access and use . . .

It was suggested that the above stated be amended with the addition "of the South Haven Harbor."

Explore installation of a mast hoist . . .

Traffic at the launch area can be dangerous, identify safety improvements.

Pyle wondered if the redevelopment of that area will include clear markings on pavement and noted that the driveway reconfiguration should be a help.

Silverman suggested changing the wording of this item to “Encourage safe use of the launch ramps”.

Silverman reminded that there was previous discussion of changing the launch area’s location. VandenBosch said we looked at that and did not pursue that because the sediment falls out there and the launch ramp area scours out. A grant application has been submitted to replace the launch ramps. There was discussion regarding accessibility and the narrowness of the docks; VandenBosch will look into width issue. It was noted that modifying one ramp for handicap access would be an improvement.

8. Signage.

After discussion of current and future signage, VandenBosch stated he needs to check the bridge signage plan. Silverman noted that the no wake sign has disappeared. Discussion ensued regarding signage for no wake sign; on the pier head is fine but the size was too big.

B. Municipal Marina Facilities.

1. Municipal Marina Facilities.

Promote quality facilities at all municipal marinas. – Ongoing

Delete the next two paragraphs (completed or outdated).

Reword the fourth paragraph to read “Support upgrade and expansion of the facilities at the Maritime Marina and Black River Park.”

Delete most of the next paragraph retaining “Keep all facilities handicap accessible.”

Support availability of bicycles for boater use at the municipal marinas. VandenBosch noted that bicycles have been a very popular item and we want to buy more.

C. Infrastructure.

1. Develop a Capital Improvement Plan

The first paragraph can be deleted since it has been completed.

Annually review all capital improvement plans. Slight wording change - Ongoing

2. Dinghy Docks and Paddle Craft Facilities

Eliminate the word “fully” so the paragraph reads:

Support the Pedestrian, Bicycle and Paddle Plan which was adopted by the City Council on 2/15/2009. Improve existing dinghy docks and access at the Dyckman bridge.

VandenBosch noted that we would like to have more dinghy docks but there are budget restrictions. Dinghy docks are also a maintenance issue as they must be removed for winter.

Link to the Paddle Plan is included here.

Clean out celery pond and creek (this has been done) to create a small craft launch site and dinghy dock.

High water makes it possible to be used although no dock has been installed. VandenBosch noted that the city applied for handicap access docks but didn’t get any of those grants.

Add a dinghy dock to the Museum Marina.
Design dinghy docks so they would be usable for a river launch service if one becomes available.

There are river launch tours now . . . the launch is not being used as river taxis but they could be. We have a few docks. Need more.

3. Harbor Walk.

Complete the Harborwalk to include signage, lighting, benches, landscaping, etc.

VandenBosch noted the city spends a lot of time on maintenance of the Harborwalk.

Stephens asked Marple about the harbor walk and maritime district. Marple said new interpretive displays will be modeled after our catwalk, all existing will be upgraded and we hope to add additional ones as time goes on. Once one is done and received we can start fundraising for subsequent ones.

Public access by Mariner’s Cove and Piers End Cove – needs to be cleaned up to the greatest extent possible as we have an asset here that’s unbelievable – miles of public access you don’t get anywhere else. Maritime District wants to celebrate the history. Marple would like to see emphasis on ensuring that public access of harbor remains free and clear.

VandenBosch said we have discussed how to acquire land next to Piers End Cove; currently trying to purchase a little bit more room along what used to be the Three Pelicans property. Doesn’t completely eliminate the pinch point.

Stephens suggested "Support the maintenance of all public access along the Harborwalk / Maritime District. Discussion ensued regarding the narrowness of the Harbor Walk in some areas.

Questions and discussion regarding what the Maritime District is. Marple explained that there are no defined boundaries by design. Stephens noted that some business owners are promoting the Maritime District. Marple (speaking as a business person) noted the Maritime District provides a unique characteristic for South Haven. Designation of a district is a proven method of attracting additional visitors. Speaking as a historical person, Marple stated, "We have a rich history, let's celebrate it!" then commented, "All we need is an Indian massacre."

VandenBosch stated that we do and told about the Ottawa, Potawatomi massacre near Harbor Springs. After interest was shown, VandenBosch stated he will send everyone a link. Suggested that South Haven needs to have a Chief Pokagon memorial; Pokagon himself claims this is his home. The bluff near the light keeper's house is significant in Chief Pokagon's narrative.

4. Green space & Views

Silverman suggested the following wording: Support the retainage and acquisition of adequate public space along waterfronts.

5. Former Street Garage

Keep sea wall extension statement.

D. Planning.

1, Future Development and Impact on Safe Navigation.

Silverman volunteered to revise this section and submit to VandenBosch.

2. Development Approval Role

Keep: All projects using harbor maintenance funds and all developments along the river should come before the Harbor Commission for their recommendation. - ongoing

Delete: Participate in any discussion regarding the Celery Pond property.

Keep: The Harbor Commission should have a role in any changes that affect marinas, river or harbor. - ongoing

3. Natural Environment Preservation.

Consensus to delete this section, retaining only

Work with DNRE and other entities regarding environmental issues for the entire Black River watershed. – ongoing

Include the above statement in Section A-5 with suggested rewording.

VandenBosch will research the criteria of Clean Marina Status.

4. Effects of Development and Loss of Marine Services.

The group discussed why this section was written. It was during the era when the city lost Patterson Marine and was concerned about losing All Seasons Marine.

Assess whether we have adequate marine services in the harbor, including fueling, haul out, storage, marine repair service, marine parts and supply, dockage (seasonal and transient) and

pump out facilities. If some services appear to be lacking, encourage private businesses to provide them. If private businesses are unable to provide the services or stop providing needed services, consider municipal services.

Silverman suggested including these concerns into the study we have a consultant do.

E. Funding

1. Ongoing Dredging Project Funding

Investigate other sources of revenue for dredging. - ongoing

Recommend an increase from 3% to 6% of marina revenues set aside for the River Maintenance budget.

Recognize the need for additional funding for dredging and allocate some of the tax collection from the increased assessments of property and homes on the river for dredging.

Request funding from the DDA to allocate toward harbor maintenance. – ongoing

Determine if the current method of calculating special assessments for dredging is equitable or if changes are needed.

2. Capital Improvement Plan

The Commission duties include an annual review of this plan along with the Black River Maintenance document. As part of that review recommendations must be made in a timely manner.

3. Harbor Budget Policies

It is the duty of the Commission to review and make recommendations to the annual River Maintenance, Marina Fund and Black River Park budgets in a timely manner so they can be considered during the budget adoption process of the City Council. – ongoing

All assessment categories should identify a budget and funding mechanism. Consider for example:

- Future waterfront developments should be specifically assessed for their impact on the harbor.
- Establish a broad based assessment (as broad as possible) to fund the maintenance of the harbor.
- Analyze the current income from the operation of the Municipal Marinas and appropriate contribution to harbor maintenance.

After questions and comments, VandenBosch informed the Commission that they may forward the bridge work email to anyone. This change was necessitated by a ruling from the Coast Guard.

3. Adjourn

The meeting adjourned at 7:47 p.m.

All in favor. Motion carried.

RESPECTFULLY SUBMITTED,

Marsha Ransom
Recording Secretary

City of South Haven
Marina Fund - Fund 594
For the period ended October 31, 2014

Revenues:	*Month Actual*		*YTD Actual*	*2014-15 Adopted Budget*
State GrantS-Bldg & Dredging	$ -		$ -	$ -
Interest and Rents	4		16	2,000
Charges for Service	12,111		125,797	510,000
Other Revenue	421		4,117	8,000
Total Revenues	$ 12,536	#	$ 129,930	$ 520,000

Expenses:	*Month Actual*	*0*	*YTD Actual*	*2014-15 Adopted Budget*
Personnel Costs	$ 90		$ 37,577	$ 79,792
Supplies	875		5,558	10,500
Admin/Computing/Equipment Fees	3,309		13,237	39,710
Contractual Services	14,131		39,277	87,000
Other Services and Charges	8,320		32,350	118,749
Utilities	3,621		17,874	46,000
Repairs and Maintenance	2,068		8,540	22,000
Capital Outlay	-		2,031	-
Operating Transfers Out	1,757		7,027	21,080
Total Expenses	34,170	-	163,471	424,831
Depreciation	-		-	133,300
Total Expenses and Depreciation	$ 34,170		$ 163,471	$ 558,131

Net Fund Change	$ (21,635)	**$**	**(33,541)**	$ (38,131)

Retained Earnings	June 30	$	2,391,030	
Less Net Capital Assets		$	(2,261,516)	
Net Undesignated Reserves		**$**	**129,514**	Net Working Capital
Add Seasonal Rentals paid but not posted to income yet		**$**	**234,498**	
Deduct Expenses paid in advance, not posted to expense yet			**-**	
Deduct Receivables owed to Marina but not yet received		**$**	**(2,156)**	
Deduct State amounts owed to Marina but not yet received		**$**	**(71)**	
Add current expenses owed but not paid yet		**$**	**9,485**	
Adjusted Undesignated Reserves		**$**	**337,729**	
Cash & Investments Balance at month end		**$**	**337,729**	

Marina Fund Revenue
As of October 31, 2014

Fiscal Year Ending in	Seasonal	Transient	Revenue Total	Operational Expense	Net Revenue
2002	234,236	161,984	396,220	369,081	27,139
2003	259,840	166,084	425,924	403,463	22,461
2004	280,151	167,907	448,058	429,353	18,705
2005	282,245	170,944	453,189	479,287	-26,098
2006	300,819	173,817	474,636	517,881	-43,245
2007	343,171	170,869	514,040	471,088	42,952
2008	368,408	168,362	536,770	493,906	42,864
2009	377,955	166,674	544,629	492,039	52,590
2010	350,635	161,584	512,219	485,399	26,820
2011	314,270	140,546	454,816	521,900	-67,084
2012	330,660	151,046	481,706	427,390	54,316
2013	377,199	89,267	466,466	599,418	-132,952
2014	402,337	154,894	557,231	535,339	21,892
2015	32,387	93,410	125,797	156,444	-30,647

NOTES ON OPERATIONAL EXPENSES:

Operational Expense does not include depreciation of approximately $133,000 per year.
Operational Expenses do not include large construction expenses.
Operational Expenses do not include the annual transfer to the River Maintenance Fund of approximately $21,080 annually.

Operating Expense excludes reimbursable dredging costs

Seasonal Marina Revenue

	Jan	Feb	Mar	Apr	May	Jun	Jul	Aug	Sep	Oct	Nov	Dec	Calendar Year Total
2007	58,007	147,702	34,975	42,960	23,115	-3,846	6,199	1,554	703	1,100	22,348	19,285	354,102
2008	60,795	185,520	32,325	36,210	19,130	16,761	820	50	0	6,550	26,799	900	385,860
2009	44,784	185,069	32,390	25,955	31,150	23,488	843	50	850	900	27,990	1,000	374,469
2010	13,035	218,460	41,530	20,235	5,050	20,692	0	434	350	200	29,812	1,000	350,798
2011	43,222	157,210	38,473	31,230	12,498	-158	800	1,950	400	1,100	17,625	8,865	313,215
2012	31,810	178,650	44,840	14,750	31,795	-1,925	0	200	1,050	3,940	11,420	850	317,380
2013	29,476	169,790	80,125	37,555	28,362	14,431	0	0	750	7,735	7,300	7,545	383,069
2014	328,765	5,389	22,415	950	13,080	8,408	3,918	4,814	12,360	11,295			411,394
2015													0

Transient Marina Revenue

	Jan	Feb	Mar	Apr	May	Jun	Jul	Aug	Sep	Oct	Nov	Dec	Calendar Year Total
2007	0	0	0	8,528	11,494	39,340	56,647	48,986	10,983	1,553	-41	0	177,490
2008	0	0	0	11,657	8,957	29,620	53,315	53,501	11,385	630	0	0	169,065
2009	0	0	0	11,972	10,994	24,877	55,645	39,835	22,176	1,301	0	0	166,800
2010	0	0	0	8,445	9,029	25,154	52,730	40,107	8,654	1,299	0	0	145,418
2011	0	0	0	373	16,162	21,221	47,565	41,459	12,635	515	0	0	139,930
2012	0	0	0	4,684	12,448	31,740	40,344	21,935	4,392	0	-267	0	115,276
2013	0	706	3,502	2,466	3,689	12,501	33,066	40,527	17,724	843	359	542	115,924
2014	2,236	4,453	5,894	6,520	10,785	31,946	42,313	40,590	9,691	816			155,243
2015													0

City of South Haven
Black River Park Fund - Fund 545
For the period ended October 31, 2014

Revenues:	*Month Actual*		*YTD Actual*	*2014-15 Adopted Budget*
State Grant	$ -	#	$ -	$ -
Charges for Service	5,903		45,514	148,500
Interest and Rents	4		15	3,000
Other Revenue	-		10,000	-
Total Revenues	$ 5,907	#	$ 55,529	$ 151,500

Expenses:	*Month Actual*	*YTD Actual*	*2014-15 Adopted Budget*
Personnel Costs	$ 6,533	$ 22,048	$ 42,078
Supplies	102	2,346	3,000
Admin/Computing/Equipment Fees	2,095	8,382	25,145
Contractual Services	2,729	5,502	12,000
Utilities	957	3,838	10,050
Other Services and Charges	627	2,525	10,050
Repairs and Maintenance	-	-	7,500
Capital Outlay	-	-	-
Operating Transfers Out to 296	483	1,933	5,800
Total Expenses	13,526	46,573	115,623
Depreciation	-	-	50,300
Total Expenses and Depreciation	$ 13,526	$ 46,573	$ 165,923

Net Fund Change	$ (7,619)	**$ 8,956**	$ (14,423)
Retained Earnings	June 30	$ 570,415	
Less Net Capital Assets		$ (416,853)	
Net Undesignated Reserves		**$ 153,562**	
Add Seasonal Rentals paid but not posted to income yet		**$ 49,881**	
Deduct Receivables owed to BRP but not yet received		**$ -**	
Deduct Expenses paid in advance, not posted to expense yet		**-**	
Add(Deduct) Amount due to/ from Beach, Rev earned but not in cash		**$ -**	
Add Accounts Payable owed but not paid yet		**$ 625**	
Adjusted Undesignated Reserves		**$ 213,024**	
Cash & Investments Balance at month end		**$ 213,024**	

Black River Park Revenue
As of October 31, 2014

Fiscal Year Ending	Boat Launch & Parking fees	Seasonal Launch Permit	Seasonal Dock	Transient Dock	Revenue Total	Operational Expense	Net Revenue
2007	84,563	9,480	42,544	10,471	147,058	90,412	56,646
2008	96,484	11,143	37,896	10,053	155,576	97,145	58,431
2009	93,239	9,240	37,261	11,922	151,662	99,992	51,670
2010	84,432	9,249	38,478	10,183	142,342	90,883	51,459
2011	66,393	8,658	42,038	3,859	120,948	113,430	7,518
2012	73,619	10,711	55,134	10,097	149,561	129,949	19,613
2013	71,440	9,150	47,844	10,980	139,414	102,155	37,259
2014	85,510	12,987	47,487	10,550	156,534	143,867	12,667
2015	30,828	1,525	6,730	6,198	45,281	44,640	641

Note: Operational Expense does not include depreciation of approximately $50,000 per year.
Operational Expenses do not include large construction expenses or.
Transfer to River Maintenance Fund of approximately $5,800 annually

Boat Launching & Parking Fees Revenue

	Jan	Feb	Mar	Apr	May	Jun	Jul	Aug	Sep	Oct	Nov	Dec	Calendar Year Total
2007	0	0	0	1,289	4,160	7,725	13,459	7,941	5,917	1,808	0	0	42,299
2008	0	0	0	831	2,768	5,172	11,030	10,046	4,709	2,170	0	0	36,726
2009	0	0	0	370	3,378	5,558	10,738	7,704	8,311	812	0	0	36,871
2010	0	0	0	527	6,102	4,284	13,972	11,844	2,799	2,186	0	0	41,714
2011	0	0	0	126	4,301	6,870	19,145	10,345	7,373	1,221	0	0	49,381
2012	0	0	0	0	7,000	10,050	19,667	9,346	4,702	2,376	1,031	112	54,285
2013	56	0	91	637	3,671	6,154	14,069	12,964	4,874	3,081	14	0	45,611
2014	0	0	0	866	5,519	6,100	11,176	13,249	5,160	1,243			43,313
2015													0

Launching - Seasonal Permit Revenue

	Jan	Feb	Mar	Apr	May	Jun	Jul	Aug	Sep	Oct	Nov	Dec	Calendar Year Total
2007	0	0	0	2,261	4,157	2,749	1,453	0	0	0	0	0	10,620
2008	0	0	0	1,885	3,743	2,972	1,620	0	0	0	0	0	10,220
2009	0	0	0	2,770	4,924	2,608	640	0	0	0	0	0	10,942
2010	0	0	0	1,370	7,158	1,015	1,546	0	75	0	0	150	11,314
2011	0	0	0	610	75	1,403	1,222	0	0	75	0	0	3,385
2012	0	0	0	600	6,620	1,580	1,200	0	0	-270	0	0	9,730
2013	0	100	400	2,400	3,900	3,250	1,050	200	50	0	0	100	11,450
2014	100	75	175	1,875	4,500	2,425	1,275	250	0	0			10,675
2015													0

Seasonal Dock Revenue

	Jan	Feb	Mar	Apr	May	Jun	Jul	Aug	Sep	Oct	Nov	Dec	Calendar Year Total
2007	9,140	27,530	6,155	11,695	12,270	5,762	0	0	250	400	5,200	4,787	83,189
2008	7,940	45,315	9,400	11,905	12,675	-1,388	0	0	200	2,000	5,009	1,655	94,711
2009	6,865	41,215	7,085	9,125	4,990	15,095	0	0	0	0	5,000	0	89,375
2010	3,740	30,265	19,680	11,325	15,585	-1,163	1,650	0	0	0	4,650	2,369	88,101
2011	6,550	22,995	3,740	7,215	8,505	8,720	727	3,707	0	1,680	2,175	4,670	70,684
2012	3,995	20,485	9,585	6,440	18,500	1,655	3,745	0	0	600	2,000	200	67,205
2013	3,070	24,760	11,180	6,850	17,300	1,735	55	985	0	800	4,700	2,650	74,085
2014	49,950	-430	-1,870	8,490	11,425	8,755	1,870	0	200	4,660			83,050
2015													0

Transient Dock Revenue

	Jan	Feb	Mar	Apr	May	Jun	Jul	Aug	Sep	Oct	Nov	Dec	Calendar Year Total
2007	0	0	0	169	1,303	1,986	3,988	2,672	984	0	0	0	11,102
2008	0	0	0	329	1,562	1,609	2,571	2,904	1,204	303	0	0	10,481
2009	0	0	0	0	483	1,776	2,444	3,796	1,332	0	0	0	9,831
2010	0	0	0	0	748	930	2,657	2,479	746	0	0	0	7,560
2011	0	0	0	0	818	1,958	4,492	2,190	1,181	23	0	0	10,662
2012	0	0	0	0	604	2,221	3,567	2,325	1,125	98	0	0	9,939
2013	0	0	0	0	163	1,873	3,815	4,435	808	74	0	0	11,168
2014	0	0	0	0	911	2,944	2,412	3,592	194	0			10,053
2015													0

City of South Haven
River Maintenance Fund - Fund 296
For the period ended October 31, 2014

Revenues:	*Month Actual*	*YTD Actual*	*2014-15 Adopted Budget*
Assessments	$ -	$ -	$ -
Interest and Rents	-	-	-
Other Revenue	-	-	-
Operating Transfers In	3,073	12,293	36,880
Total Revenues	$ 3,073	$ 12,293	$ 36,880

Expenditures:	*Month Actual*	*YTD Actual*	*2014-15 Adopted Budget*
Operating Supplies	$ -	$ -	$ 500
Contractual Services	-	-	-
Repairs and Maintenance	-	-	-
Capital Outlay	-	-	20,000
Total Expenditures	$ -	$ -	$ 20,500

Net Fund Change	$ 3,073	$ 12,293	$ 16,380
Prior Year End Fund Balance	June 30	$ 57,106	
Estimated YTD Fund Balance		$ 69,399	
Cash & Investments Balance at month end		**$ 69,399**	
Projected Cash Balance at Fiscal Year End		**$ 73,486**	

LAKES MICHIGAN–HURON WATER LEVELS – NOVEMBER 2014

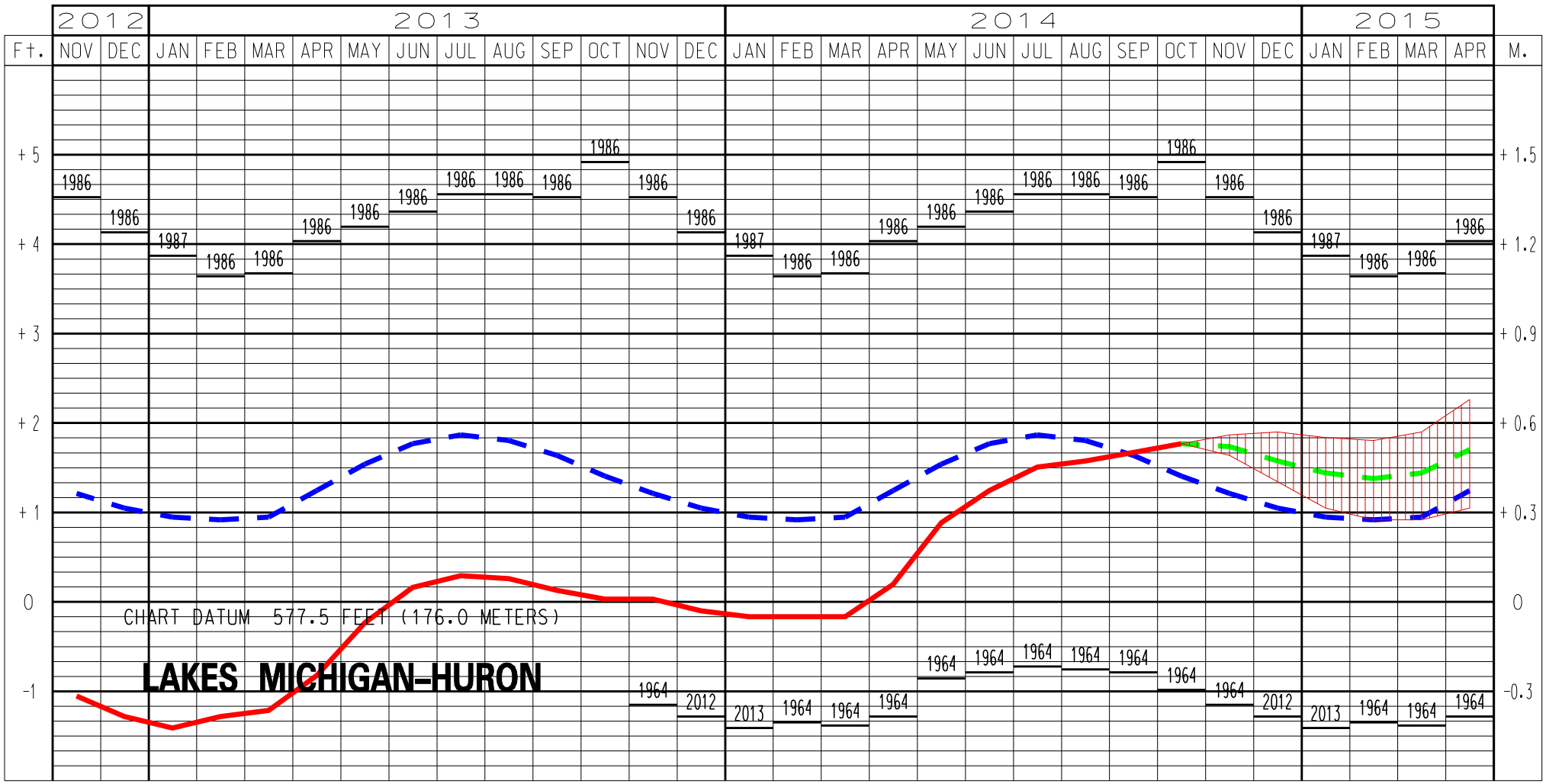

LEGEND

LAKE LEVELS

RECORDED

PROJECTED

AVERAGE **

MAXIMUM **	1985	1985	1973	1973
MINIMUM **	1936	1934	1926	1934

** Average, Maximum and Minimum for period 1918-2013

HARBOR COMMISSION STRATEGIC PLAN
Approved April 17, 2012

Mission Statement

In the performance of it duties the Harbor Commission shall remain committed to the continuous improvement of the Black River Harbor by taking a long term view of the harbor's capacity, it's navigability, it's value to the community, and it's use by both public and private interests, and shall assure the health, safety and enjoyment of the harbor by providing recommendations for its maintenance and operation.

Goals and Objectives

A. Safety and Navigation

1. Dredging Needs of the Harbor

Assess the river conditions and prepare to perform maintenance dredging as necessary. *-ongoing*

Develop a checklist that outlines the steps to be used in assessing the need for dredging and the process of dredging.

Maintain valid permits for maintenance dredging. *-ongoing*

Dredging is one element of a comprehensive Black River maintenance program that must be ongoing. *-ongoing*

Develop recommendations for maintaining ingress and egress to the harbor, including adequate depth at the pierheads.

Apply for any grant funding or other funding that becomes available for harbor dredging or other safety improvements. *-ongoing*

2. Electrical Utilities

Encourage all marinas and private slips to upgrade their electrical wiring if they are making any electrical improvements. *-ongoing*

3. Fueling of Marine Vessels

The Commission has identified the direct fueling of boats as a major safety concern and has developed the following action steps to educate the public and enforce the laws regarding direct fueling:

- Work with marina managers and commodores to have signs posted clearly explaining how and where boaters may fuel their boats.
- Develop an educational campaign that can be used in local schools, boater safety classes, in the newspaper and other outlets.
- Enlist support of the Van Buren County Sheriff Marine Patrol along with SHAES and South Haven Police to educate boaters on the dangers and laws regarding direct fueling. Encourage warnings before citations and fines.
- Send a letter to the State expressing concern and requesting a statement on the back of the Marina Operating Permit (MOP) stating: "Direct Fueling is against the law and can lead to revocation of this MOP".
- Provide the fire code letter from the SHAES Executive Director to marinas.

4. Emergency Services

Promote a close working relationship with the Sheriff Marine Patrol, Coast Guard, Coast Guard Auxiliary, South Haven Police Department and South Haven Area Emergency Services. Meet at least annually to discuss mutual issues related to harbor safety. -*ongoing*

Review procedures to respond to fuel and contaminant spills.

Encourage agencies to maintain oil absorbent equipment to manage emergencies.

5. Erosion and Contaminants

Work with the DEQ, DNR, Drain Commission, farmers and other entities to ensure proper procedures are followed to reduce erosion and contaminants in the river in the City and upstream from the City.

Support testing for E. coli and work to resolve any related issues. -*ongoing*

6. Harbor Traffic Flow and Safety

Identify ways to improve traffic flow especially on weekends and during special events

Ensure that the channel between the harbor lines is kept clear of natural obstructions, anchored boats and barges, and all new docks and headwalls. -*ongoing*

Add a light to the bridge that will signal to boaters when the bridge is closing.

7. Public Access

Support public access and use. *-ongoing*

Explore installation of a mast hoist for people launching sail boats at the boat launch.

Traffic at the launch area can be dangerous, identify safety improvements.

8. Signage

Evaluate the current signs and upgrade/remove as necessary. Locate signs strategically so as not to block valued views.

Increase the number of No Wake signs, including adding signs at the bridge and at the Southside Marina.

B. Municipal Marina Facilities

1. Municipal Marina Facilities

Promote quality facilities at all municipal marinas. *-ongoing*

The Southside Marina has excellent facilities (showers and restrooms, lounge and meeting rooms, picnic areas, etc) for its boaters. Similar quality facilities should be provided to all other Municipal Marinas.

The City should move forward expeditiously with the construction of a new facilities building at the Northside Marina. Support use of grant funding to replace the existing facility.

The City should upgrade and expand the restroom/shower facilities at the Museum and Black River Park Marinas, adding a lounge area. These are likely to be long term projects.

At Black River Park Marina and the Museum Marina, add a roof and screen walls to the new deck. All facilities should be handicap accessible. Boaters should be surveyed first to determine if this meets their needs.

Promote availability of bicycles for boater use at the municipal marinas.

C. Infrastructure

1. Develop a Capital Improvement Plan

A capital improvement plan should be developed for each of the marinas. The Harbor Commission should review the plan and identify projects that it would like to see completed. The plan should include a budget and timeline for such improvements.

Annually review the River Maintenance capital improvement plan. *-ongoing*

2. Dinghy Docks and Paddle Craft Facilities

Fully support the Pedestrian, Bicycle and Paddle Plan which was adopted by the City Council on 2/16/2009. Improve existing dinghy docks and access at the Dyckman bridge.

http://www.south-haven.com/csh%20folder/csh/Pages/Communications/PlansReportsStudies.html

Clean out and trim Celery Pond creek to create a small craft launch site and dinghy dock.

Add a dinghy dock at the Museum Marina.

Try to design dinghy docks so they would be usable for a river launch service if one becomes available.

3. Harborwalk

Complete the Harborwalk to include signage, lighting, benches, landscaping etc.

Find and analyze the original plan for the Harborwalk to determine if the plan has been fully implemented. If it has not continue implementing the plan.

Improvements are needed on the public easements through Mariner's Dockage and Pier's End Cove.

Complete Harborwalk to create a unified concept by adding better way finding signs, paving materials, improve interpretative plaques etc.

Encourage a cooperative maintenance agreement between the City and the Michigan Maritime Museum.

4. Green Space/Views

The Commission recommends that the city retain and acquire, when available, adequate public space along waterfronts. These areas should be maintained and developed for open green space and public access.

5. Former Street Garage

Add a sea wall extension and dinghy dock at the former street garage, encouraging natural sea walls.

D. Planning

1. Future Development and Impact on Safe Navigation

The Harbor Commission supports a detailed Harbor study that would update existing material from the 2001 Smith Group JJR report. To accomplish this we need to hire a competent and professional consultant to determine the capacity of the Black River Harbor and to provide guidance for future policy and decision making with a 10 year outlook.

The South Haven City Council should authorize a forward looking study of our Harbor to determine if additional slips and/or services are needed. Is our Harbor at capacity (defined as its ability to safely handle its current usage)? If not, how many additional boats can it handle given its current configuration? Are additional slips needed? If so, where should they be located? If it is at capacity based upon current configuration, are there modifications that would permit increased capacity?

Consider funding a comprehensive professional study. The study should look at where are we and where do we want to be in the next 5 to 10 years. This study should be delayed at this time due to the unusual economic conditions until a certain level of economic normalcy returns to the harbor. In the interim, contact area schools, colleges and universities seeking their help with acquiring accurate data on size, quantity and frequency of use of vessels using the Black River. Analyze the new numbers from the study with a focus on the last paragraph on page 4 of the JJR memorandum of 4/23/2001 which discusses the capacity of the river based on channel widths.

Additionally the needs assessment should look at existing facilities to determine if they currently serve our needs, how they could be modified to best serve our needs today and what needs to be changed to best serve our future needs?

A process needs to be defined, created, promoted and followed setting development goals and criteria based on consideration of our harbor size, location and boating and community concerns.

Continue to monitor and provide guidance on the new waterfront park extension east of the Steelheader's fishing wall and its impact on safety and navigation

Any additional waterfront development or development affecting the waterfront must be scrutinized very carefully, both before, during and after the planned construction. In advance of any construction the impact upon the harbor (which includes the Black River to the City limits) by the project as well as the proposed methods of construction of the project (remember Sherman Hills) must be carefully examined and evaluated. The impact on boat traffic (if, for example, additional slips are proposed) and the impact upon navigation must be evaluated. Of concern is erosion of soils flowing into the river caused by poor and unsupervised developments.

As proposals for the development are presented, the Harbor Commission will consider issues of need, safety, navigational hazards and environmental concerns and make appropriate recommendations.

2. Development Approval Role

All projects using harbor maintenance funds and all developments along the river should come before the Harbor Commission for their recommendation. *-ongoing*

Participate in any discussion regarding the Celery Pond property. *-ongoing*

The Harbor Commission should have a role in any changes that affect marinas, river or harbor. *-ongoing*

3. Natural Environment Preservation

Allow for innovative development without totally eliminating the vegetation and public access in the Black River around the present canoe launch area.

We need to be proactive on waterfront development for example Sherman Hills. The City needs to determine how the river needs to be protected when a development is proposed. *-ongoing*

Work with DNRE and other entities regarding environmental issues for the entire Black River Watershed. *-ongoing*

Encourage all marinas to achieve Clean Marina Status. *-ongoing*

4. Effects of Development and Loss of Marine Services

Assess whether we have adequate marine services in the harbor, including fueling, haul out, storage, marine repair service, marine parts and supply, dockage (seasonal and transient) and pump out facilities. If some services appear to be lacking, encourage private businesses to provide them. If private businesses are unable to provide the services or stop providing needed services, consider municipal services.

E. Funding

1. Ongoing Dredging Project Funding
Investigate other sources of revenue for dredging. *-ongoing*

Recommend an increase from 3% to 6% of marina revenues set aside for the River Maintenance budget.

Recognize the need for additional funding for dredging and allocate some of the tax collection from the increased assessments of property and homes on the river for dredging.

Request funding from the DDA to allocate toward harbor maintenance. *-ongoing*

Determine if the current method of calculating special assessments for dredging is equitable and or if changes are needed.

2. Capital Improvement Plan

The Commission duties include an annual review of this plan along with the Black River Maintenance document. As part of that review recommendations must be made in a timely manner.

3. Harbor Budget Policies

It is the duty of the Commission to review and make recommendations to the annual River Maintenance, Marina Fund and Black River Park budgets in a timely manner so they can be considered during the budget adoption process of the City Council. *-ongoing*

All assessment categories should identify a budget and funding mechanism. Consider for example:

- Future waterfront developments should be specifically assessed for their impact on the harbor.
- Establish a broad based assessment (as broad as possible) to fund the maintenance of the harbor.
- Analyze the current income from the operation of the Municipal Marinas and Public Launch site to get a full understanding of the usage and to determine an appropriate contribution to harbor maintenance.

F. Marketing and Communication

1. Emergency Communication

Be in a position to communicate safety information for ongoing and emergency issues with marina owners, managers and users. Develop ways to communicate safety information with boaters. *-ongoing*

Establish an email list for contact with boaters and harbor stakeholders.

Install bulletin boards at the boat launch.

2. Marina Management

Evaluate management of municipal marinas. *-ongoing*

There needs to be more communication with transient and seasonal boaters using marina facilities and the boat launch. Create and distribute feedback cards to survey customer service and desired amenities. Do customer satisfaction surveys on a regular basis and conduct appropriate follow up.

Include welcome packages with information on the City and local businesses, gifts and coupons. Inform boaters where they can rent bicycles and vehicles.

Install informational bulletin boards at all municipal marinas to inform boaters and the public of events, phone numbers, tourist information etc.

Improve on-going staff training. *-ongoing*

Encourage development of a marina and harbor marketing plan on an annual basis. *-ongoing*

The Commission needs to schedule annual meetings at the marinas to hear concerns and suggestions for improvements of services.

3. River Stakeholders

Communicate with the City and its boards and commissions as well as the DEQ, DNR, Drain Commission, farmers, boaters etc. to ensure we maintain a high quality harbor, including water quality issues.

Promote the Clean Marina program to harbor marinas and as a marketing approach for the harbor.

Use bulletin boards at marinas and boat launch to post Harbor Commission meeting schedule, agendas and Harbor Commission contact information.

4. Survey and Feedback Procedures

Survey boaters and slip owners to determine what services they want and how it should be provided. Gather feedback and implement changes on dredging and other issues.

Survey all boaters, slip owners and marina owners regarding river maintenance and safety issues. Use an email list to inform and listen to river stakeholders.

Paul Vandenbosch

From: Larry Halberstadt
Sent: Wednesday, October 01, 2014 1:57 PM
To: Paul Vandenbosch
Cc: Brian Dissette; Roger Huff
Subject: RE: Bridge Questions
Attachments: 2014-1001-Response to Harbor Commission.docx; 33 CFR 118.80.pdf; Page E2 - General Electric Plan.pdf; Page E15 - Misc Details.pdf

Attached is my attempt to answer to questions below. If you still need additional information, let me know.

From: Paul Vandenbosch
Sent: Wednesday, October 01, 2014 10:56 AM
To: Larry Halberstadt
Cc: Brian Dissette
Subject: Bridge Questions

Larry;

At last night's Harbor Commission workshop, I received the following questions:

Will the bridgetender be able to direct traffic using the lights on the bridge? For example, will the bridgetender be able to let downstream traffic through first with a green light then let upstream traffic through?

What is the proposed light sequence for opening the bridge to boat traffic? To car traffic?

What is the bridge signage plan?

Will height gauges (air draft gauges) be replaced?

Paul VandenBosch
Assistant City Manager/Harbormaster

City of South Haven
pvandenbosch@south-haven.com
269-637-0775 Desk
269-637-5319 Fax
539 Phoenix Street
South Haven, MI 49090

The following lighting is being replaced with the Dyckman Avenue Bascule Bridge Project:

- Roadway traffic signal heads in four locations.
- Roadway lighting in two locations.
- Pier protection lights in six locations.
- Midspan navigation lights in four locations.

The following lighting is being added to the Dyckman Avenue Bascule Bridge:

- Underdeck lighting at the west side dinghy dock.
- Traffic signals on the piers for the navigation channel in two locations.

In addition, four CCTV cameras will be mounted on the new roadway light poles. Two cameras will provide a view of the roadway in each direction and two cameras will provide a view of the channel in each direction.

The current contract does not include replacement of the air/draft gauges on the bridge. In addition, it does not include replacement of any of the existing signs mounted to the bridge in any location or the addition of any new signs mounted to the bridge. We have not evaluated any of these items. If replacement is needed, now is the time to review these items. If there are any items that would be difficult for staff to replace, we should consider adding the work to Anlaan's contract.

Permitting the bridge tender to direct traffic using the bridge lights was discussed with Hardesty & Hanover during project design. It does not appear to have been included in the final bid documents. Instituting this type of system would require a modification to the manner in which standard USCG required lighting would operate. The USCG would need to review this change prior to implementation.

The channel is sufficiently wide for most vessels to pass without needing to wait. However, in practice, operators prefer to use the middle of the channel which requires single file/one way traffic. Further discussion of this concept needs to occur involving the DPW Director, Operations Manager, bridge tenders, and the USCG. I suspect that the bridge tenders do not want to serve as traffic cops for channel traffic and that such a system would not be used, even if it were available. If we desire to add this system and can get USCG approval, the additional costs will need to be paid by the City since the grant funds are maxed out.

The standard navigation lighting will operate in accordance with USCG regulations: The four midspan lights will remain lit and red at all times, unless the bridge is fully open. At that point in time, they turn green. The traffic lights being added to the piers would operate in the same manner.

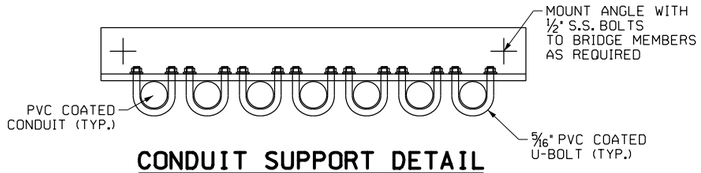

CONDUIT SUPPORT DETAIL

FASTEN TO STEELWORK
N.T.S.

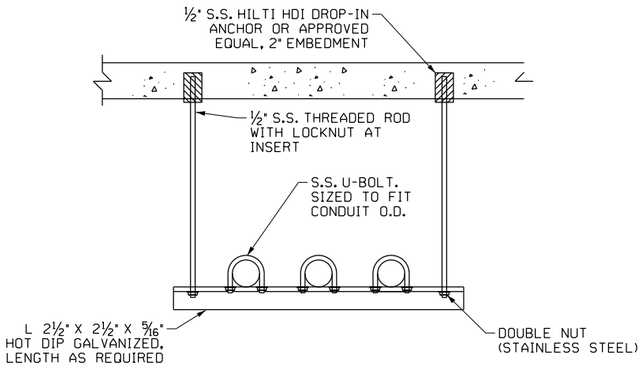

TYPICAL CONDUIT SUPPORT

N.T.S.

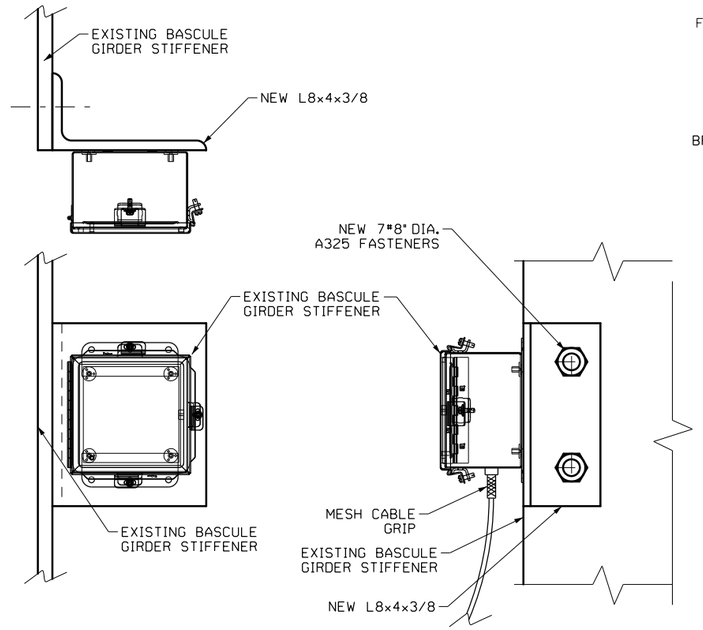

INCLINOMETER SUPPORT DETAIL

N.T.S.

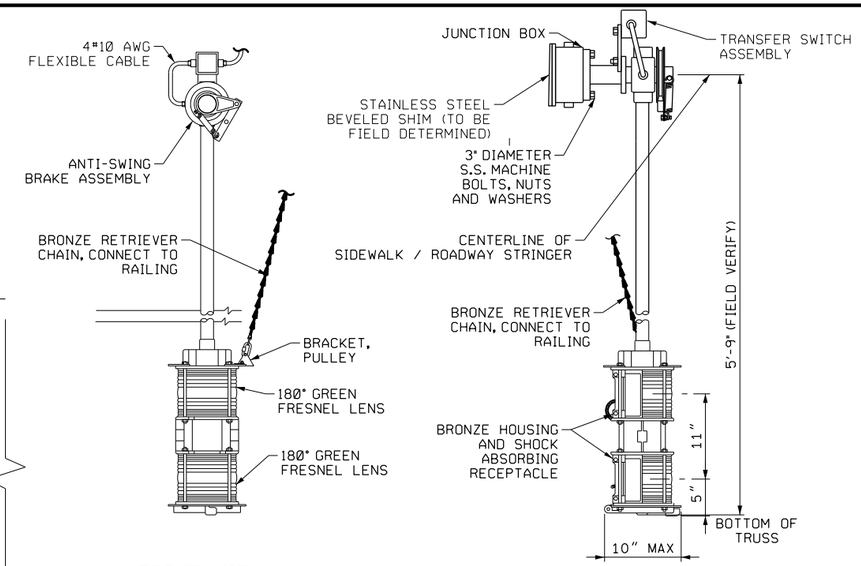

FRONT VIEW

SIDE VIEW

SPAN NAVIGATION LIGHT

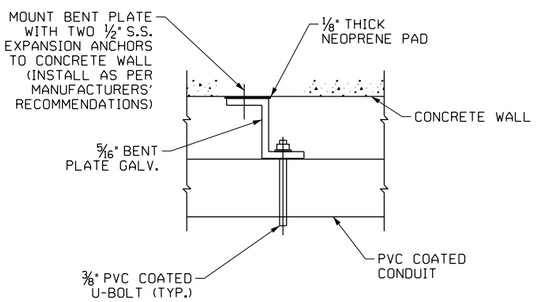

CONDUIT SUPPORT DETAIL

FASTEN TO CONCRETE SURFACES
N.T.S.

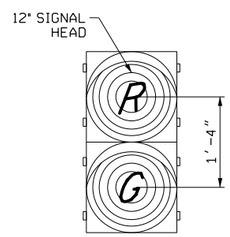

MARINE TRAFFIC SIGNAL

N.T.S.
(SEE NOTE 6)

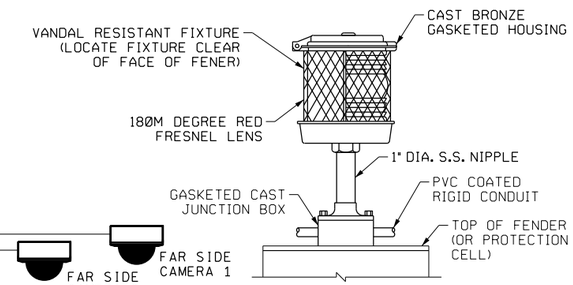

FENDER PIER LIGHT

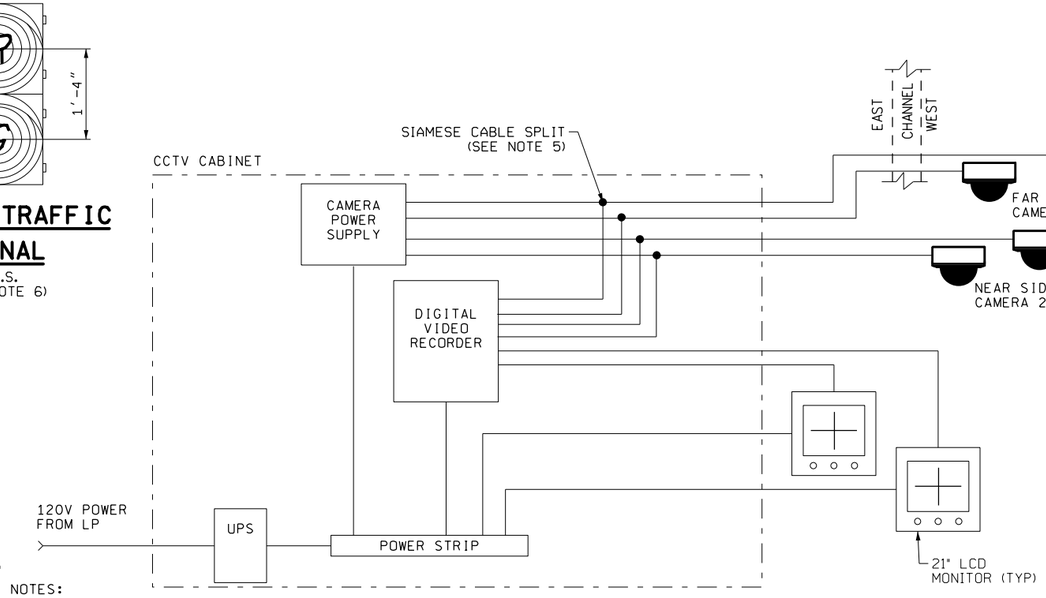

CCTV SCHEMATIC

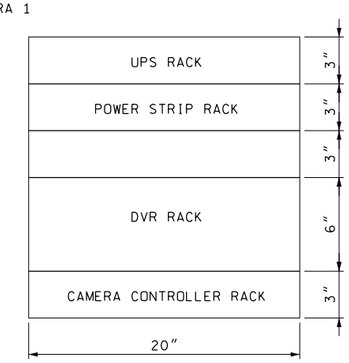

CCTV CABINET

(SEE NOTE 4)

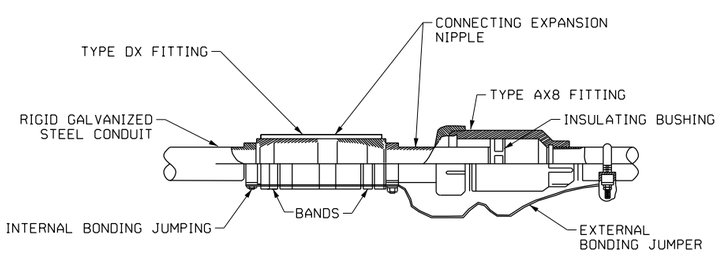

TYPICAL DEFLECTION & EXPANSION FITTINGS

NOTES:

1. PROVIDE NEW 6"X6"X4" NEMA 4X FIXED TERMINAL BOXES ADJACENT TO EXISTING FIXED TERMINAL BOXES.
2. PROVIDE AND INSTALL NEW #16 AWG SOUTHWIRE HLX01-POS-16/P1 TWISTED SHIELDED PAIR BETWEEN NEW FIXED BOXES & EXISTING CONTROL CABINET.
3. PROVIDE AND INSTALL NEW #16 AWG FLEXIBLE TWISTED SHIELDED PAIR BETWEEN NEW FIXED TERMINAL BOXES AND NEW INCLINOMETERS.
4. CCTV CABINET SIZE TO BE VERIFIED BY MANUFACTURER.
5. WIRING TO CCTV CAMERAS TO BE IMPLEMENTED WITH SIAMESE CABLES. EACH CABLE CONSISTS OF A COAXIAL VIDEO CABLE AND TWO #12 AWG POWER CABLES. CABLES ARE SPLIT WITHIN THE CCTV CABINET AS PER THE MANUFACTURER.
6. CONTRACTOR TO SUBMIT MOUNTING DETAIL FOR VERTICAL SURFACE.

South Haven
Department of Public Works
1199 8th Avenue
South Haven, MI 49090
269-637- 0737

City of South Haven
Van Buren County, Michigan

DYCKMAN AVE BASCULE BRIDGE
OVER THE BLACK RIVER (REHABILITATION)

REVISIONS:

ISSUE NO.	DESCRIPTION	DATE

Hardesty & Hanover
engineering that moves you

DRAWN BY: RL	DATE: 3/20/13
CHK'D BY: AHN	DATE: 3/21/13
STRUCT NO: 10808	
JN: 115782A / 117021A	

MISCELLANEOUS DETAILS

ISSUE DATE: DEC 2013

SHEET E15 DWG 41

5:15:39 PM eoliver
S:\02804.00\4000_Fin_Des\CADD\30_Elec\E14 - MISCELLANEOUS DETAILS.dgn

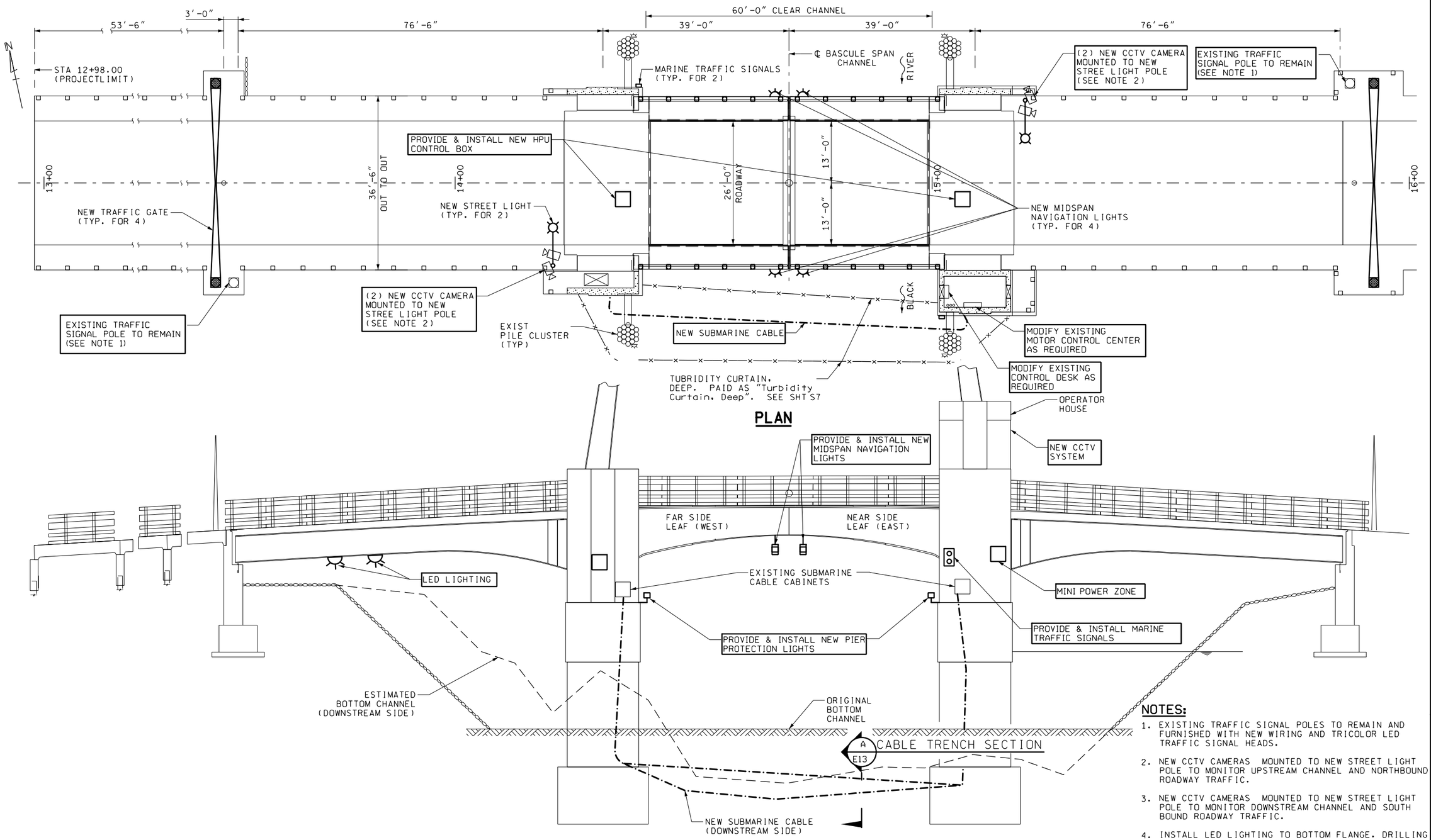

NOTES:

1. EXISTING TRAFFIC SIGNAL POLES TO REMAIN AND FURNISHED WITH NEW WIRING AND TRICOLOR LED TRAFFIC SIGNAL HEADS.
2. NEW CCTV CAMERAS MOUNTED TO NEW STREET LIGHT POLE TO MONITOR UPSTREAM CHANNEL AND NORTHBOUND ROADWAY TRAFFIC.
3. NEW CCTV CAMERAS MOUNTED TO NEW STREET LIGHT POLE TO MONITOR DOWNSTREAM CHANNEL AND SOUTH BOUND ROADWAY TRAFFIC.
4. INSTALL LED LIGHTING TO BOTTOM FLANGE. DRILLING OR WELDING IS NOT PERMITTED IN WEBS OR FLANGES.

South Haven
Department of Public Works
1199 8th Avenue
South Haven, MI 49090
269-637- 0737

City of South Haven
Van Buren County, Michigan

DYCKMAN AVE BASCULE BRIDGE
OVER THE BLACK RIVER (REHABILITATION)

REVISIONS:

ISSUE NO.	DESCRIPTION	DATE

Hardesty & Hanover
engineering that moves you

DRAWN BY: RL	DATE: 3/20/13
CHK'D BY: AHN	DATE: 3/21/13
STRUCT NO: 10808	
JN: 115782A / 117021A	

GENERAL ELECTRICAL PLAN

ISSUE DATE: DEC 2013

SHEET E2 DWG 28

5:15:23 PM eoliver
S:\02804.00\4000_Fin_Des\CADD\30_Elec\E02 - GENERAL ELECTRICAL PLAN.dgn

DEPARTMENT OF HOMELAND SECURITY
UNITED STATES COAST GUARD
BRIDGE ADMINISTRATION DIVISION
MINIMUM LIGHTING FOR BASCULE BRIDGES
33 CFR 118.80

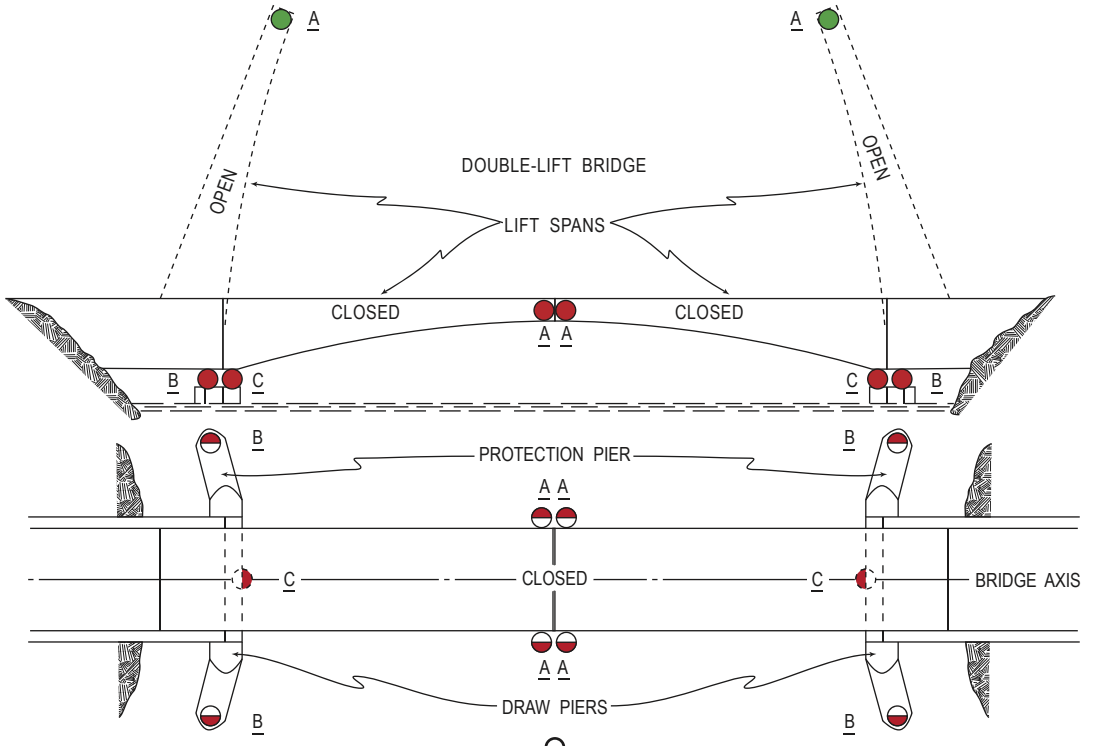

LIGHT COLORS
AND
ARCS OF VISIBILITY

LIFT SPAN—180° GREEN WHEN LIFT SPAN IS FULLY OPEN FOR NAVIGATION, 180° RED FOR ALL OTHER POSITIONS OF LIFT SPAN (60° OR LESS GREEN AND RED PERMITTED ON BRIDGES LIGHTED PRIOR TO JAN. 1, 1949, UNTIL LIGHTS ARE REPAIRED OR REPLACED).

PIER—180° RED.

AXIS—180° RED
MAY BE OMMITTED WHEN DRAW AND PROTECTION PIERS ARE STRAIGHT ON THEIR CHANNEL FACES.

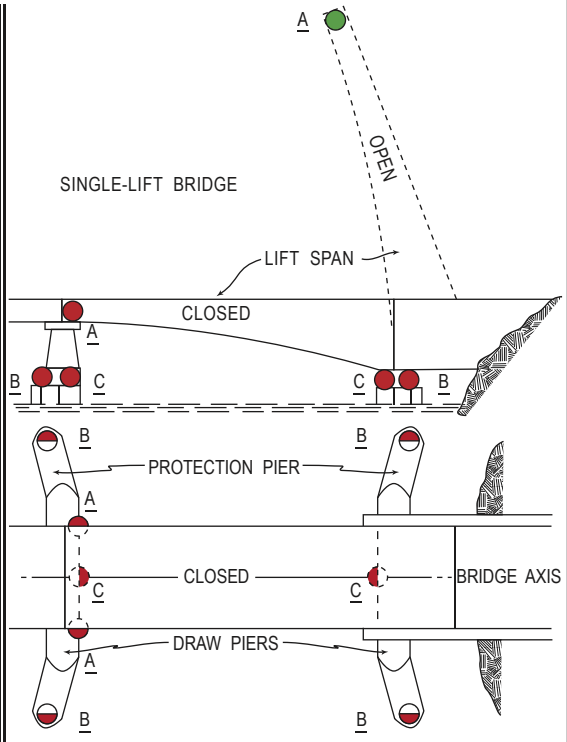

City of South Haven

Harbor Commission Agreed Upon Procedures

For the 2014 Boating Season

VH CPA's

	PAGE
Independent Accountant's Report on Applying Agreed Upon Procedures	1
Agreed Upon Procedures Review	
Discussion on Limiting Conditions	2
Findings and Observations	3
Attachments	
Detail of Findings and Recommendations	4-5

Douglas J. Vredeveld, CPA
(616) 446-7474
Peter S. Haefner, CPA
(616) 460-9388

INDEPENDENT ACCOUNTANT'S REPORT ON APPLYING AGREED UPON PROCEDURES

October 27, 2014

To the Harbor Commission
City of South Haven, Michigan

We have performed the procedures enumerated below for the 2014 boating season or other periods as indicated, which were agreed upon by the City of South Haven Harbor Commission and management of the City of South Haven to assist with certain aspects of the operations of its marina's (collectively the "Marina"). The agreed upon procedures engagement was performed in accordance with standards established by the American Institute of Certified Public Accountants. The sufficiency of the procedures is solely the responsibility of those parties specified in this report. Consequently, we make no representation regarding the sufficiency of the procedures described below either for the purpose for which the report has been requested or for any other purpose. We performed the following procedures:

- Obtain the Board approved slip rates for the 2014 boating season
- Obtain the Harbor Commission Procedures & Policies document
- Review of daily usage logs of each marina for one day during the 2014 boating season (April 15 through October 15)
- Tie revenue per transient database to general ledger (will also include consideration of the State reservation system)
- Review of the number of seasonal slip rentals at each marina
- Select 10 seasonal slips and determine payment for each seasonal slip has been received
- Review supporting documentation for two bank deposits
- Select one seasonal and one transient discount to determine if they adhered to approved policies
- Review invoices for payments made directly to the marina management company for the period July 1, 2013 through October 15, 2014

We were not engaged to and did not perform an examination, the objective of which would be the expression of an opinion on the revenues, expenses or internal controls associated with the Marina operations. Accordingly we do not express such an opinion. Had we performed additional procedures, other matters might have come to our attention that would have been reported to you.

This report is intended solely for the use of the City of South Haven Harbor Commission and management of the City of South Haven and is not intended to be and should not be used by anyone other than these specified parties. Distribution of this report without the consent of Vredeveld Haefner LLC and approval of management of the City of South Haven is prohibited.

Vredeveld Haefner LLC

We were engaged to perform agreed upon procedures as outlined in the Independent Accountant's Report on Agreed Upon Procedures. These procedures included obtaining data from the City of South Haven and the contracted Marina office manager to perform our analysis. Since we were not engaged to perform an examination under Generally Accepted Auditing Standards, our services did not necessitate obtaining evidential matter that would have increased the reliability of information given to us for review.

The following list summarizes limiting conditions related to the services performed as part of this engagement:

ITEMS NOT AVAILABLE OR PROVIDED

There were several items we anticipated receiving which did not exist or were not made available to us. We did not receive a database of transient revenue activity. In addition, we were informed that there were no discounts applied to transient customers.

- **Obtain the Board approved slip rates for the 2014 boating season**
    - The Board approved seasonal and transient slip rates do not provide an allowance for the marina to utilize the rates mandated by the State DNR system which, in certain instances, are at variance with the Board approved rates.
    - The Board approved transient slip rates do not provide for short-term rates even though the marina offers such rates to customers.
- **Obtain the Harbor Commission Procedures & Policies document**
    - The marina frequently processes refunds from the marina office.
- **Review of daily usage logs of each marina for one day during the 2014 boating season (April 15 through October 15)**
    - It was noted that marina staff are not performing the boat slip inspections twice per day at each marina in accordance with marina policy.
    - Black River Marina does not utilize a computer system and there is no daily usage that presents marina activity on a daily basis.
- **Tie revenue per transient database to general ledger (will also include consideration of the State reservation system)**
    - Supporting documentation for transient revenue charged and collected was not available and accordingly we were unable to complete this step.
- **Review of the number of seasonal slip rentals at each marina**
    - The number of slips available at Black River Marina for seasonal rental are at variance between the Board approved seasonal slip rates and the number of slips itemized on a marina provided aerial map.
- **Select 10 seasonal slips and determine payment for each seasonal slip has been received**
    - It was noted that the seasonal sales log maintained by the City finance department had not been updated since mid-season even though the 2014 boating season has concluded.
    - The payments itemized on the seasonal sales log for the 10 slips selected for testing were properly agreed to the City's receipt records.
- **Review supporting documentation for two bank deposits**
    - We observed that the Marina Deposit Ticket submitted to the City finance department does not always contain supporting documentation for each amount presented on the ticket.
- **Select one seasonal and one transient discount to determine if they adhered to approved policies**
    - The seasonal discount reviewed appeared to conform to Harbor Commission policy.
    - A transient discount was not available to review as the Marina Office Manager stated that there were no transient discounts provided to customers during the 2014 boating season other than offering short-term slip rates.
- **Review invoices for payments made directly to the marina management company for the period July 1, 2013 through October 15, 2014**
    - We observed that the marina management company continues to pay sales tax for certain marina related purchases however the tax portion of the charge is appropriately not reimbursed to the marina management company by the City.

ATTACHMENTS

City of South Haven
Marina Operations
Detail of Findings and Recommendations
2014 Boating Season

Findings:

General

- The Marina Dock Check List for the date 7/18/14 was selected for each marina to verify that marina staff performed an inspection of each slip for the presence of a boat. The check list form covers a one week period and it was noted that the inspections are not being consistently performed twice per day in accordance with marina policy.
- Based on discussion with the Marina Office Manager, the marina utilized a reservation fee of $8.00 instead of the $5.00 rate itemized in the Board resolution setting the seasonal and transient slip rates at South Haven Municipal Marinas. The Marina Office Manager commented that the State DNR system charges $8.00 for reservations and the marina wanted to be consistent with all customers and not have two different rates depending on whether the customer reserved through the State system or directly through the marina office.
- Based on discussion with the Marina Office Manager, Black River Marina does not utilize a computer system and accordingly there is no daily usage log that presents marina activity on a daily basis.
- When reviewing the State DNR system GIA Harbor Commission report for the month of May 2014, it was noted that there were refunds initiated by the marina. In accordance with the Harbor Commission Procedures and Policies, no refunds should be processed by marina staff. This resulted in noncompliance with Harbor Commission policy.
- During review of the 8/7/14 bank deposit, it was noted that there was no support for $6.00 that had been collected in cash. This resulted in noncompliance with Harbor Commission policy.

Transient Customers

- Based on discussion with the Marina Office Manager, the marina offered short-term 2-hour block rental rates to transient customers who wanted to dock their boat for a temporary visit. These rates are setup in the RezStream however this practice has not been approved by the Harbor Commission or City Council in the resolution setting the seasonal and transient slip rates at South Haven Municipal Marinas. This resulted in noncompliance with Harbor Commission policy.
- The Marina Office Manager was unable to generate a report that details transient revenue, either for an individual day or in the aggregate for the entire season. This may be due to limitations within the data collection and reporting capabilities of the RezStream and State DNR systems, due to the necessary data not being captured within the systems or a combination of both. While the marina has partial records of transient customers, the opportunity exists for a single dock to be rented to multiple transient customers within a single day (since the marina allows short-term rental periods) for which accurate data on each customer is not currently being maintained. Accordingly, the transient revenue recorded in the general ledger could not be verified.
- Based on discussion with the Marina Office Manager, it was noted that in certain instances the marina was utilizing different rates for transient overnight customers than those approved by the Board as published by the Michigan State Waterways Commission. The South marina is required under an agreement with the State to utilize the State DNR reservation system and for reasons unknown, the State DNR system chose to utilize rates different from those published by the Michigan State Waterways Commission.

Seasonal Customers

- The 2014 seasonal sales log for each marina that is maintained by the City Finance Director was reviewed and the following were noted:
    - At the start of the agreed-upon-procedures engagement, the log had not been updated, reviewed or monitored since June 2014. While the majority of seasonal slips are rented prior to the boating season, the log should be maintained and up to date throughout the boating season. This resulted in noncompliance with Harbor Commission policy.
    - The City Council resolution setting the seasonal slip rates at South Haven Municipal Marinas states that Black River Marina has 62 slips however, based on review of an aerial map provided by the Marina Office Manager, only 60 slips exist at that marina. This discrepancy should be resolved.
    - There were several discrepancies noted between the seasonal sales log maintained by the City and the records maintained by the Marina Office Manager. It is likely that those discrepancies would have been reconciled at the time the log was updated through the remainder of the 2014 boating season. This resulted in noncompliance with Harbor Commission policy.

Recommendations:

General

- We recommend that boat slip inspections should be performed twice per day at each marina in accordance with marina policy.
- We recommend the City Council resolution setting the seasonal and transient slip rates at South Haven Municipal Marinas provide an allowance for the marina to utilize rates mandated by the State DNR system, as applicable.
- We recommend the City and marina staff consider implementing a system at Black River Marina to capture daily usage activity.
- We recommend the City either implement controls to ensure compliance with Harbor Commission policy that refunds are not processed by marina staff or that the Harbor Commission modify its policy to provide an allowance for marina staff to process refunds to customers.
- We recommend the Marina Deposit Ticket submission to the City finance department contain supporting documentation for each amount presented on the ticket.

Transient Customers

- We recommend either the Harbor Commission and City Council approve short-term rental rates or the marina discontinue the practice of offering such short-term dockage.
- We recommend the City review the data collection and reporting capabilities within the RezStream and State DNR systems to evaluate the opportunities for capturing accurate daily transient sales data for each marina that may be reconciled to the general ledger.
- We recommend the Harbor Commission and City Council resolution setting the transient slip rates at South Haven Municipal Marinas provide an allowance for the marina to utilize rates mandated by the State DNR system, as applicable.

Seasonal Customers

- We recommend the seasonal sales log maintained by the City finance department be updated on a perpetual basis and reviewed/monitored monthly on a timely basis.
- We recommend the discrepancy in the number of slips available for seasonal rental at the Black River Marina be investigated and corrected.