South Haven Area Recreation Authority

Tuesday, January 21, 2013

3:00 p.m., South Haven Charter Township Hall

09761 Blue Star Highway

AGENDA

1. Call to order
2. Roll Call
3. Approval of Meeting Minutes
   A. November 26, 2013 Board Meeting
4. Approval of Agenda
5. Interested citizens in the audience will be heard on items not on the agenda
6. Financial Reports:
   A. Approval of SHARA finance report
   B. Authority Board will be updated on the SHARP financial statement
   C. Approval of SHARA FY 2014 Budget
7. Authority Board will be updated on the status of the construction plans, for the SHARP site, by Midwest Civil Engineers:
   A. See attached MCE report
   B. See attached MCE DRAFT plans
8. Authority Board will be updated on the status of the Pilgrim Haven park proposal, by Mr. Peter Ter Louw, Southwest Michigan Land Conservancy
9. Authority Board will be asked to go into closed session pursuant to Michigan Open Meetings Act; Public Act No. 267 of 1978; 15.268; Section 8 (d) to consider the purchase or lease of real property up to the time an option to purchase or lease that real property is obtained.
10. Adjourn

Respectfully Submitted,

Brian Dissette

South Haven City Manager

South Haven Area Recreation Authority (SHARA)
Regular Meeting

Tuesday, November 26, 2013
3:00 p.m., South Haven Charter Township Hall

MINUTES

1. Call to Order

Meeting Opened at 3:00 p.m.

2. Roll Call

Members Present:	Mr. Ross Stein, Mr. Dennis Fitzgibbon, Mr. Dana Getman
Absent:	Dr. Robert Herrera, Mr. Mark McClendon
Guests:	Mr. Brian Dissette, City Manager, City of South Haven Mr. Mike Dopp, Midwest Civil Engineers Mr. Jim Marcoux

3. Approval of Meeting Minutes:

July 16, 2013 Board Meeting: Motion by Getman, seconded by Fitzgibbon to approve the minutes as presented. All in favor, motion carried.

4. Approval of Agenda:

Motion by Getman, seconded by Fitzgibbon to approve the agenda of the November 26, 2013 meeting. All in favor, motion carried.

5. Interested Citizens in the Audience Will Be Heard on Items Not on the Agenda:

Mr. Jim Marcoux addressed the board on his support for the proposed Pilgrim Haven Park project. Marcoux noted that he is part of a group of South Haven residents which have been actively meeting with representatives from the Southwest Michigan Land Conservancy (SWMLC.) Marcoux stated that the group has been discussing the proposed park at the Pilgrim Haven site. Marcoux expressed support for the proposed park development and encouraged the board to continue its work with SWMLC.

6. Approval of the SHARA Finance Reports:

a) The board discussed the SHARA Finance Report, noting the SHARA account now has a balance of $91,426.54. Dissette noted that the report illustrates bank interest has been paid.

Motion by Getman, seconded by Fitzgibbon to approve the SHARA

finance report. All in favor, motion carried.

b) The board was updated on the SHARP account, which now has a balance of $24,382.26.

c) The board discussed the SHARA fiscal year 2013 budget amendment. Dissette noted the budget amendment was created to ensure the board's spending on professional services is a budgeted expense. Dissette noted that there is sufficient fund balance to pay for the contracted services, but the amendment was needed to ensure the budget accounts for the expenses.

Motion by Getman, seconded by Fitzgibbon to approve the SHARA finance report. All in favor, motion carried.

d) The board was updated on the SHARA fiscal year 2014 budget proposal. Dissette noted that the budget proposal was created to closely mirror the 2013 budget document, and may need amendments, should the board consider professional services in the upcoming year. Dissette noted that no action was needed from the board, but recommended the board review the budget proposal and be prepared to adopt a budget at the January meeting.

7. Update on the status of the SHARP site:

The board was provided an update on the SHARP site construction plans by Mr. Mike Dopp, Midwest Civil Engineers (MCE). Dopp noted that MCE continues to make progress on the SHARP construction plans. Dopp described his efforts to refine the construction plans, in an effort to lower the construction costs. Dopp stated the revised construction cost estimate for the first phase of the SHARP site has been reduced to $2,600,000. With the first phase including four baseball fields, three soccer fields, parking, concession stand, restrooms, lighting, and other site improvements. Dopp also noted that the changes to the SHARP plans will likely require Casco Planning Commission review and consideration. Stein echoed a similar statement, noting that he had inquired with Casco staff and confirmed the Planning Commission would have to consider the changes.

8. Update on the possible mountain bike trail development:

Dissette noted that the city's staff has been in conversations with Mr. Peter Ter Louw, Southwest Michigan Land Conservancy (SWMLC), regarding the possible acquisition of up to ninety acres of forested property in South Haven Charter Township. Dissette noted that in those conversations with SWMLC, the group has discussed the possible development of biking/hiking trails, which could be constructed along the Black River and Kal-Haven Trail. Dissette noted that SWMLC is planning to seek funding for the land acquisition and that if SWMLC acquires the site, SHARA could be invited to develop trails on the property. Dissette expressed a willingness to seek grant funds from the South Haven Area Resource Council to fund the trail design, for SHARA's consideration. Dissette inquired with the SHARA board if there was interest in seeking local grant funds for the design of a trail system for the forest land. Fitzgibbon expressed a desire to understand the annual maintenance costs for the proposed trails, along with the potential insurance costs.

Dissette agreed to provide that information to the board.

Motion by Getman, seconded by Fitzgibbon to authorize Dissette to seek grant funds for SHARA, to provide funding for professional services related to trail design development. All in favor, motion carried.

10. Adjourn

Motion by Getman, seconded by Fitzgibbon to adjourn the meeting. All in favor, motion carried. The meeting was adjourned at 4:06 p.m.

Respectfully submitted by,

Brian Dissette
City Manager, City of South Haven

DRAFT

South Haven Area Recreational Authority (SHARA)

ID # 45-2387500

Date	Check #	Description	Deposit	Withdrawal	Balance
					89,257.79
31-Jan-13	Deposit	Chemical Bank	7.58		89,265.37
		January Interest			
19-Feb-13	Deposit	South Haven Township	7,966.00		97,231.37
		SHARA Support			
28-Feb-13	Deposit	Chemical Bank	7.07		97,238.44
		February Interest			
			7,980.65	0.00	
31-Mar-13	Deposit	Chemical Bank	8.26		97,246.70
		March Interest			
30-Apr-13	Deposit	Chemical Bank	7.99		97,254.69
		April Interest			
			16.25	0.00	
17-May-13	1112	Vredeveld Haefner		2,025.00	95,229.69
		2012 Audit			
22-May-13	1113	Midwest Civil Engineers		3,000.00	92,229.69
		Architectural Service/Final Constr. Docs.			
31-May-13	Deposit	Chemical Bank	8.19		92,237.88
		May Interest			
30-Jun-13	Deposit	Chemical Bank	7.58		92,245.46
		June Interest			
			15.77	5,025.00	
31-Jul-13	Deposit	Chemical Bank	7.83		92,253.29
		July Interest			
31-Aug-13	Deposit	Chemical Bank	7.84		92,261.13
		August Interest			
			15.67	0.00	
30-Sep-13	Deposit	Chemical Bank	7.58		92,268.71
		September Interest			
25-Oct-13	1114	Hardt Insurance		850.00	91,418.71
		Policy Renewal 11/11/13 - 11/11/14			
31-Oct-13	Deposit	Chemical Bank	7.83		91,426.54
		October Interest			
			15.41	850.00	
30-Nov-13	Deposit	Chemical Bank	7.51		91,434.05
		November Interest			
12-Dec-13	1115	Midwest Civil Engineers		3,500.00	87,934.05
		Phase 1 Construction Plans			
12-Dec-13	1116	Midwest Civil Engineers		7,672.50	80,261.55
		Revised Phase 1 Construction Plans			
31-Oct-13	Deposit	Chemical Bank	7.77		80,269.32
		October Interest			
			15.28	11,172.50	

City of South Haven
SHARP Cash Receipts & Expenditures

	Donations	Bank Int or Fee	Expenses	Applied to Land Purchase	Administrative Assistant	Cash Balance
Nov-02	2,650.00	2.57				2,652.57
Dec-02	100.00	2.52				2,755.09
Jan-03		1.55				2,756.64
Feb-03		1.88				2,758.52
Mar-03		1.20				2,759.72
Apr-03		1.47				2,761.19
May-03	200.00	2.04				2,963.23
Jun-03	644.00	2.84				3,610.07
Jul-03		2.46				3,612.53
Aug-03		2.13				3,614.66
Sep-03		2.67				3,617.33
Oct-03		2.85				3,620.18
Nov-03	1,000.00	5.08				4,625.26
Dec-03		2.89				4,628.15
Jan-04	10,605.00	6.91	849.00			14,391.06
Feb-04	1,933.48	11.33	290.33			16,045.54
Mar-04	5,037.00	12.53	110.35			20,984.72
Apr-04	220.00	12.21	36.25			21,180.68
May-04	1,779.35	10.66	191.91			22,778.78
Jun-04	300.00	18.75	300.00			22,797.53
Jul-04	6,170.00	20.47	4,000.00			24,988.00
Aug-04	200.00	20.55	5,250.00			19,958.55
Sep-04	98.60	22.56	1,250.00			18,829.71
Oct-04	200.00	20.74	10.35			19,040.10
Nov-04	662.00	24.38				19,726.48
Dec-04	5,000.00	24.53				24,751.01
Jan-05	5,315.51	31.65	4,522.08			25,576.09
Feb-05		34.06				25,610.15
Mar-05	4,307.93	40.80	60.00			29,898.88
Apr-05		38.93				29,937.81
May-05		67.53				30,005.34
Jun-05	1.59	41.81				30,048.74
Jul-05		40.18				30,088.92
Aug-05		40.74				30,129.66
Sep-05	426.59	49.54				30,605.79
Oct-05		85.37		7,500.00		23,191.16
Nov-05		43.30	800.00			22,434.46
Dec-05	1.59	46.81	3,000.00			19,482.86
Jan-06		46.60	2,141.50			17,387.96
Feb-06		36.99	962.24			16,462.71
Mar-06		35.94	21.00			16,477.65
Apr-06	1.65	36.51	9.85			16,505.96
May-06		23.02	296.26			16,232.72
Jun-06	351.65	18.20		7,500.00		9,102.57
Jul-06		15.18				9,117.75
Aug-06		16.99				9,134.74
Sep-06	1.65	43.09				9,179.48
Oct-06		27.12	1.35			9,205.25
Nov-06		20.69				9,225.94

Dec-06		33.55	2,500.00			6,759.49
Jan-07		76.90	2,500.00			4,336.39
Feb-07	1.65	32.17				4,370.21
Mar-07		29.94	2,897.58			1,502.57
Apr-07	101.71	20.95				1,625.23
May-07	1,923.00	18.83	2,500.00			1,067.06
Jun-07	1.71		2,594.28			(1,525.51)
Jul-07	100.00		2,541.77			(3,967.28)
Aug-07	1,050.00		2,509.65			(5,426.93)
Sep-07			2,540.34			(7,967.27)
Oct-07	1,001.71		2,552.20			(9,517.76)
Nov-07	1,000.00		2,566.53			(11,084.29)
Dec-07	106,434.00	96.05	5,115.31			90,330.45
Jan-08	5,566.12	157.92				96,054.49
Feb-08	2,600.00		4,459.77	95,896.57		(1,701.85)
Mar-08	4,515.00		2,770.16	42.99		(0.00)
Apr-08	1,380.47		2,500.95			(1,120.48)
May-08	5,500.00	1.66		4,381.18		0.00
Jun-08	1,239.27	33.38	36.47		1,076.13	160.05
Jul-08	11,700.00	35.93				11,895.98
Aug-08	100.00	2.20	42.91	9,000.00	1,285.67	1,669.60
Sep-08	5,500.00	48.75	43.68	5,000.00	905.65	1,269.02
Oct-08	650.00	2.77	74.91		976.68	870.20
Nov-08		0.49	36.93		216.65	617.11
Dec-08	10,000.00	38.28	2,318.72		198.89	8,137.78
Jan-09	90,686.47	9.26	32.24	90,000.00	799.10	8,002.17
Feb-09	350.00	6.21	68.30		699.66	7,590.42
Mar-09	1,000.00	6.70	28.14		720.97	7,848.01
Apr-09	11,090.00			10,000.00	703.21	8,234.80
May-09	2,285.00		28.12		443.95	10,047.73
Jun-09	57,601.89	11.08	1,637.29	60,245.77	287.68	5,489.96
Jul-09	62,300.00		29.92	65,000.00		2,760.04
Aug-09	71,998.00	0.43	772.50	70,000.00		3,985.97
Sep-09	7,036.66	2.45	507.50			10,517.58
Oct-09	27,906.00	1.54	446.25			37,978.87
Nov-09		9.92	473.15			37,515.64
Dec-09	3,333.34	1.91	2,780.00			38,070.89
Jan-10	5,060.00	3.86				43,134.75
Feb-10	360.00	3.44	376.26			43,121.93
Mar-10		6.81	136.32			42,992.42
Apr-10	6,435.12	3.93	581.88			48,849.59
May-10		2.62	365.00			48,487.21
Jun-10		3.63	1,956.95			46,533.89
Jul-10	1,000.00	2.33				47,536.22
Aug-10	1,000.00	2.65	827.25			47,711.62
Sep-10	105.00	3.17				47,819.79
Oct-10		5.90				47,825.69
Nov-10	100,500.00	5.03				148,330.72
Dec-10	1,666.67	9.15	40,062.29			109,944.25
Jan-11	40,500.00	9.71	8.50			150,445.46
Feb-11		8.91	40,000.00			110,454.37
Mar-11	40,100.00	5.08	15.87			150,543.58
Apr-11	14,640.00	4.34				165,187.92
May-11		4.94	14,640.00			150,552.86
Jun-11	375.00	3.90				150,931.76

Jul-11		0.95			150,932.71
Aug-11		0.53	5,000.00		145,933.24
Sep-11	100.00	1.20	4,019.03		142,015.41
Sep-11	-375.00 *				141,640.41
Oct-11			100,000.00		41,640.41
Oct-11		5.00			41,645.41
Oct-11			700.00		40,945.41
Nov-11	100.00	2.29	500.00		40,547.70
Dec-11		2.61	2,856.00		37,694.31
Jan-12	1,666.67	0.68	1,837.83		37,523.83
Feb-12		0.37	1,763.21		35,760.99
Mar-12		1.25	1,408.14		34,354.10
Apr-12			4,137.31		30,216.79
May-12			3,359.15		26,857.64
Jun-12		1.33	2,020.09		24,838.88
Jul-12		0.13	1,400.00		23,439.01
Aug-12			1,436.03		22,002.98
Sep-12		1.40	1,400.36		20,604.02
Oct-12		-0.17	-3,782.50	**	24,386.35
Nov-12		-0.09			24,386.26
Dec-12		-0.16	1.26		24,387.36
Jan-13					24,387.36
Feb-13					24,387.36
Mar-13			1.26		24,388.62
Apr-13					24,388.62
May-13					24,388.62
Jun-13					24,388.62
Jul-13					24,388.62
Aug-13					24,388.62
Sep-13			1.32		24,389.94
Nov-13					24,389.94
Dec-13					24,389.94

* June contribution from Entergy made in error (they requested money be refunded)

** Reimbursement for audit & fee expenses

Donations	Interest Earnings	Expenses	Applied to Land Purchase	Administrative Assistant	Cash Balance
756,393.05	1,906.81	301,036.85	424,566.51	8,314.24	24,382.26

Land Purchase Price	424,566.51

Loan Balance Remaining	**0.00**

SOUTH HAVEN AREA RECREATION AUTHORITY
PROPOSED BUDGET
FOR THE CALENDAR YEAR JANUARY 1 TO DECEMBER 31, 2014

REVENUES:

CITY OF SOUTH HAVEN	$2 Per Capita	$ 8,806	
SOUTH HAVEN CHARTER TWP	$2 Per Capita	$ 7,966	
INTEREST INCOME		$ 100	
	TOTAL REVENUES		$ 16,872

EXPENSES:

ADMINISTRATIVE COSTS		$ 5,000	
INSURANCE		$ 850	
AUDIT		$ 2,025	
PROFESSIONAL FEES - CONSULTING		$ 8,996	
ANNUAL LEASE PAYMENT		$ 1	
	TOTAL EXPENSES		$ 16,872
	SURPLUS		$ -

Memorandum

To: SHARA Board

From: Michael Dopp, PE

Date: 1/16/2014

Re: SHARP Phase 1

Board Members,

MCE staff has met with Dennis Fitzgibbon and went over final plans. No changes were found to be needed in this meeting and it was discussed that MCE staff will do a final review of plans and make any minor changes that are found.

MCE is in the process of making the final review and will have final plans ready by January 24. At that time plans will be forwarded to Brian Dissette in pdf format and paper copy.

The revised plans will need to be submitted to the Casco Township Planning Commission for approval for the new plan with revised phasing.

SHARP Recreation Park
Concession & Equip. Storage Facility

DRAWINGS PREPARED FOR:
SOUTH HAVEN AREA RECREATIONAL AUTHORITY

SHEET INDEX:

T	TITLE SHEET	7	PLUMBING
		8	PLUMBING
1	FLOOR PLAN	9	LIGHTING
2	ELEVATIONS		
3	SECTIONS	10	ELECTRICAL DETAILS
4	FOUNDATION/WALL SECTION	11	PANEL SCHEDULES
5	DETAILS		
6	SCHEDULES		

CONSTRUCTION NOTES:

TYPE:	IIB
OCCUPANCY:	A-2
EXPOSURE:	B
WIND:	95/110
SNOW:	50# GROUND

APPLICABLE CODES

BUILDING CODE:	MICHIGAN BUILDING CODE 2009
BARRIER FREE CODE:	MICHIGAN BARRIER FREE 2006
PLUMBING CODE:	MICHIGAN PLUMBING CODE 2006
MECHANICAL CODE:	MICHIGAN MECHANICAL CODE 2009
ELECTRICAL CODE:	INCORPORATING 2011 NEC EDITION OF THE NATIONAL ELECTRIC CODE

NOTES

SHOULD A CONTRACTOR FIND DISCREPANCIES OR AMBIGUITIES IN OR OMISSIONS FROM THE DRAWINGS OR SPECIFICATIONS, OR BE IN DOUBT ABOUT THEIR MEANING, HE SHALL NOTIFY THE ARCHITECT IMMEDIATELY.

CONTRACTORS SHALL VERIFY AND CHECK ALL DIMENSIONS ON THE JOB DURING CONSTRUCTION AND ADVISE THE ARCHITECT OF ANY DISCREPANCIES.

DO NOT SCALE DRAWINGS. USE INDICATED DIMENSIONS ONLY.

General Notes

SHARP Concession/Equip. Storage
SOUTH HAVEN, MICHIGAN

Drawn: CAN / BAP

No.	Revision/Issue	Date

MIDWEST CIVIL ENGINEERS, INC
MCE
CIVIL ENGINEERING LAND SURVEYING PLANNING
19960 TIBBS St. SOUTH HAVEN, MI. 49090 - 269.637.9205

TITLE

Sheet: T

Project:
Date:
Job:

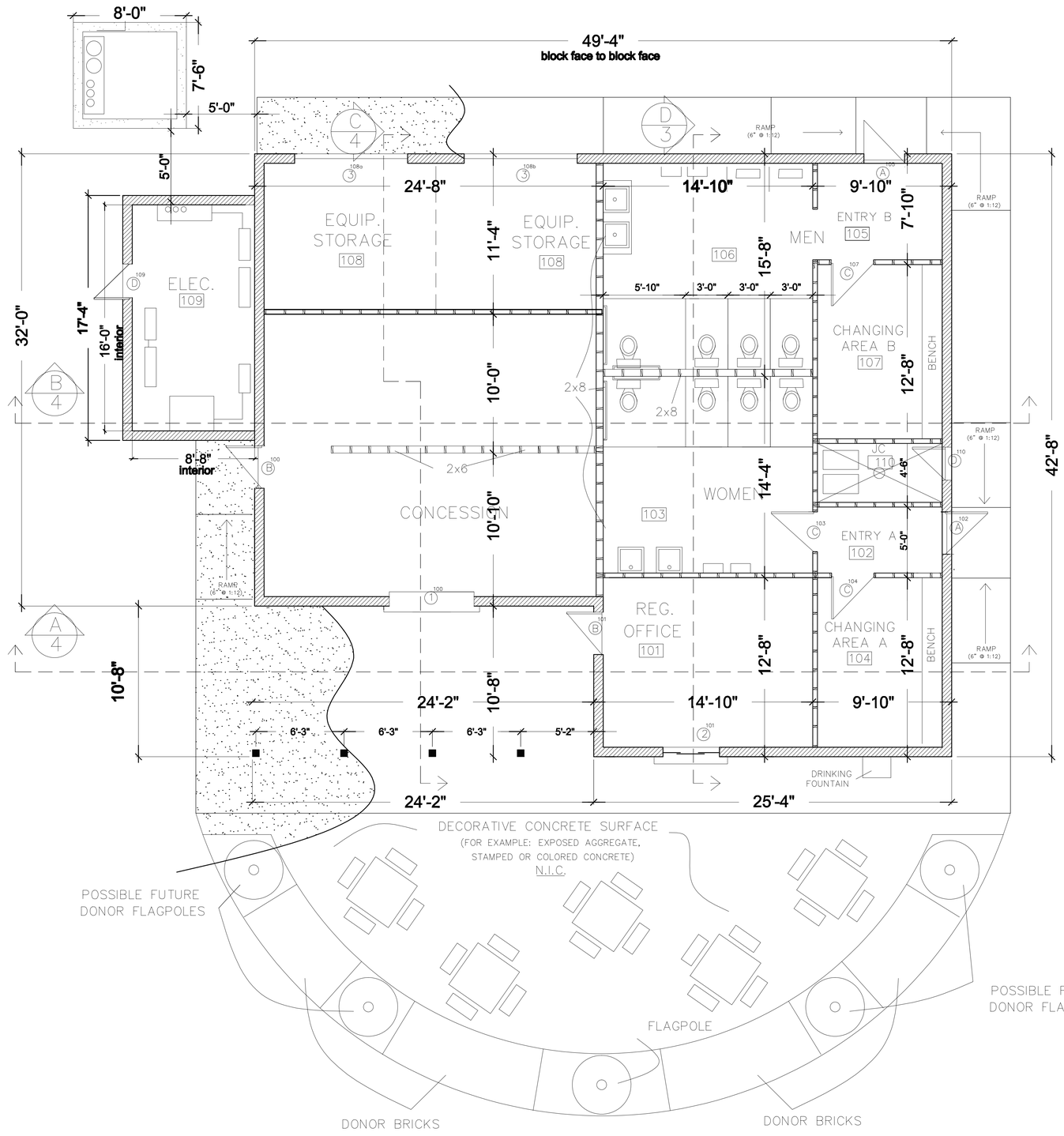

GENERAL NOTES:

LEGAL JURISTICTION:	CASCO TWP.
OCCUPANCY	"B"
TYPE CONSTRUCTION:	VB
BUILDING AREA	2,100 SF
NUMBER OF STORIES:	(1) ONE
WIND:	90–110
SNOW:	60#

1 LAYER 5/8" TYPE "X": 1 HR.

DENSGLASS "DENSARMOR" 1 HR.
WHERE INDICATED (5/8")

PLAN

1/4"=1'-0"

General Notes

SHARP Concession/Equip. Storage
SOUTH HAVEN, MICHIGAN

Drawn: CAN / BAP

No.	Revision/Issue	Date

MIDWEST CIVIL MCE ENGINEERS, INC
CIVIL ENGINEERING, LAND SURVEYING, RESCUE
59400 TIEDEMAN, SOUTH HAVEN, MI. 49090 - 269-637-2505

PLAN WITH DIMENSIONS

Sheet: 1

Date: 11/21/2013

Scale: 1/4" = 1'-0"

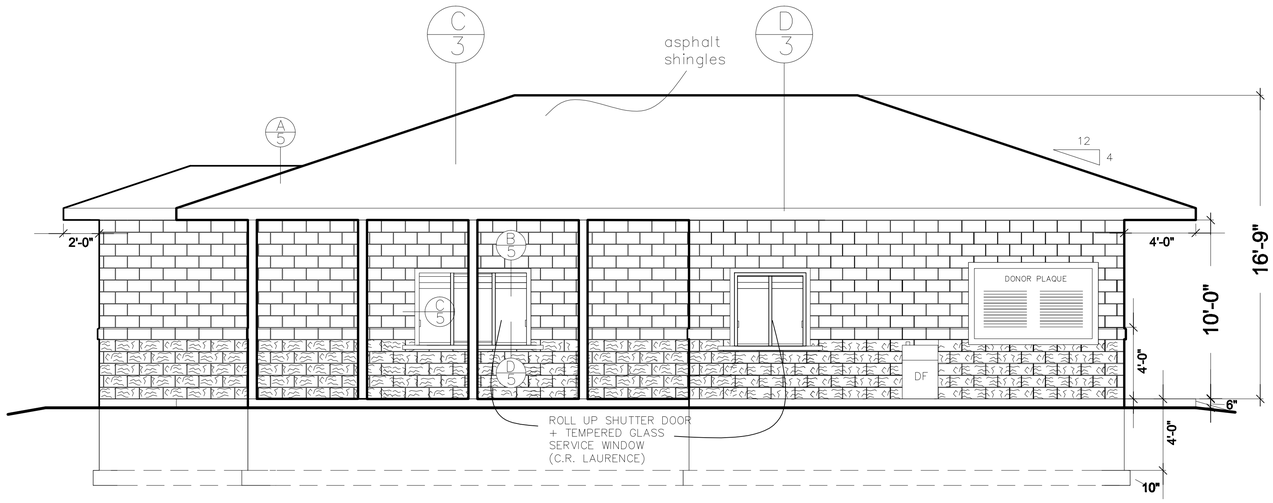

SOUTH ELEVATION

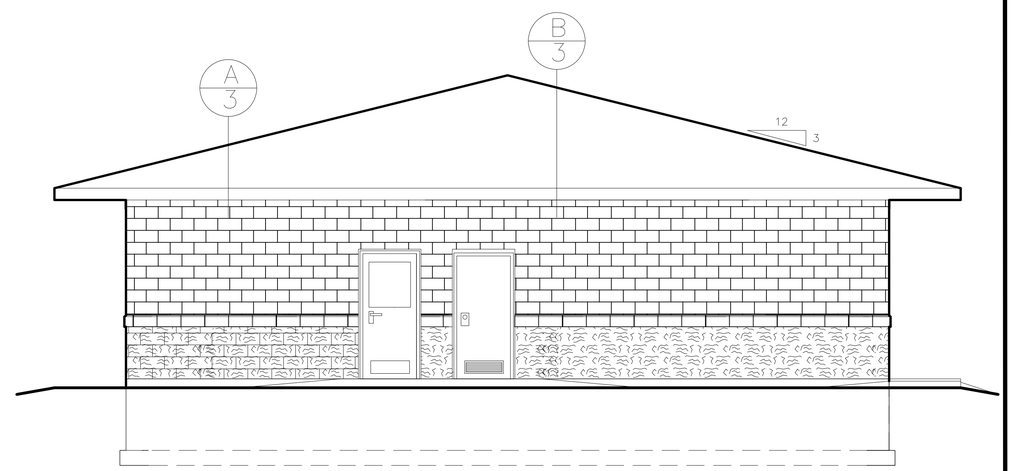

EAST ELEVATION

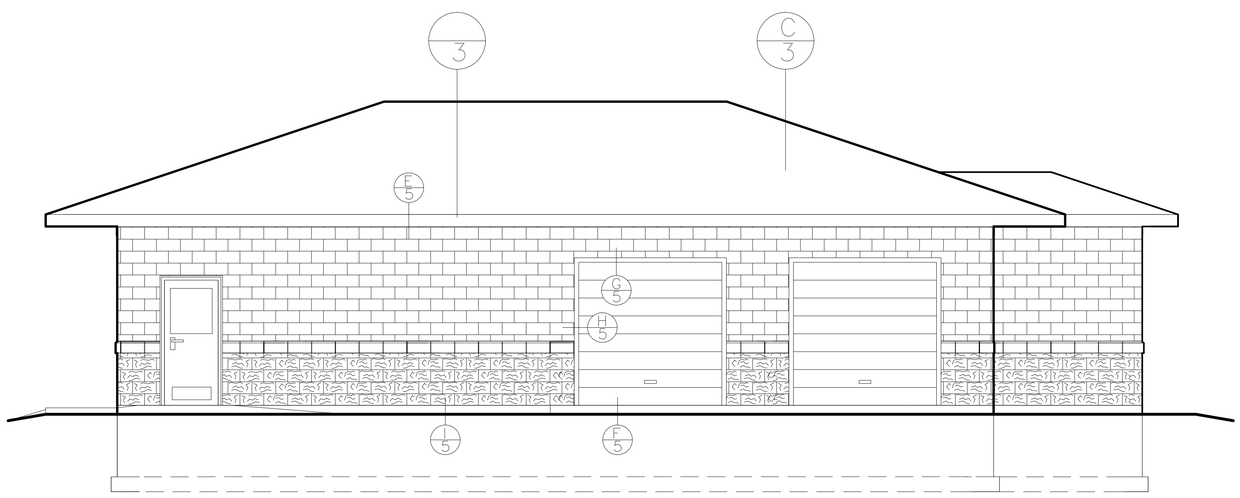

NORTH ELEVATION

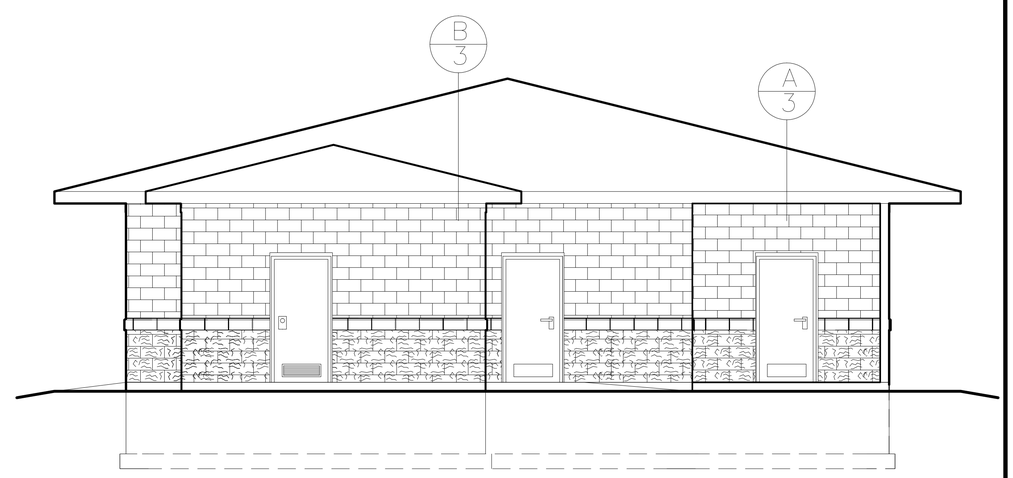

WEST ELEVATION

General Notes

SHARP Concession/Equip. Storage
SOUTH HAVEN, MICHIGAN

Drawn
CAN / BAP

No.	Revision/Issue	Date

MIDWEST CIVIL
MCE
ENGINEERS, INC
CIVIL ENGINEERING, LAND SURVEYING, HYDROLOGY
12940 CR 687 ST. SOUTH HAVEN, MI. 49090 - 269.637.8200

ELEVATIONS

Sheet
2

Project

Date
11/21/2013

Scale
1/4" = 1'-0"

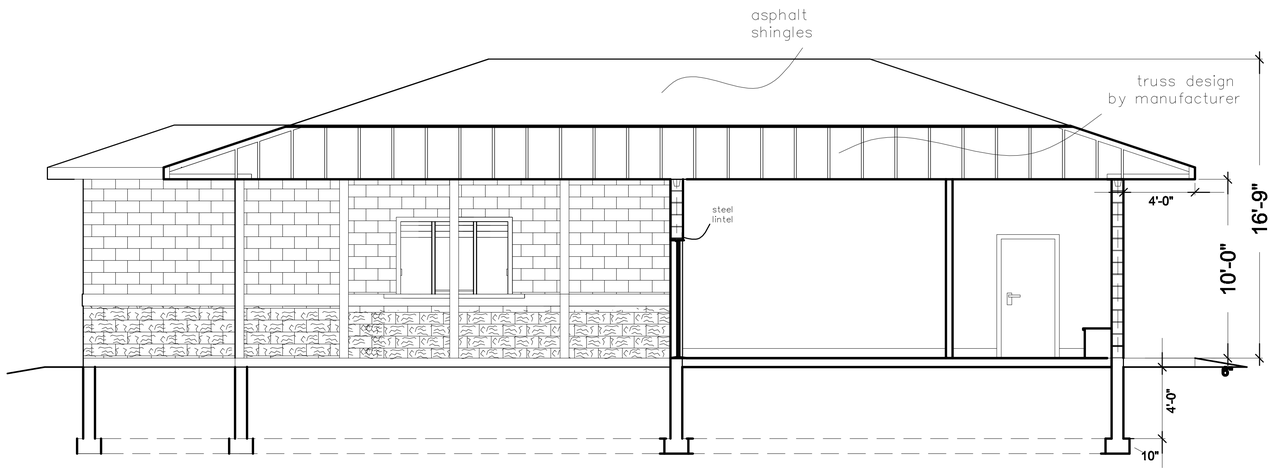

A3

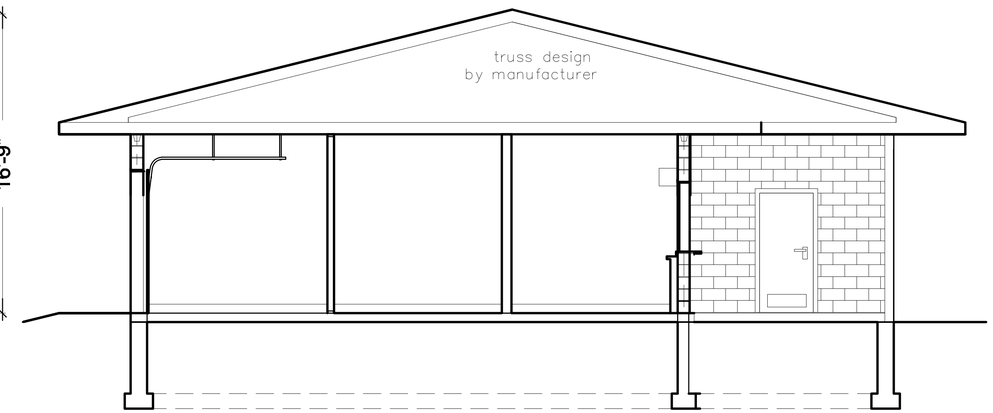

C3

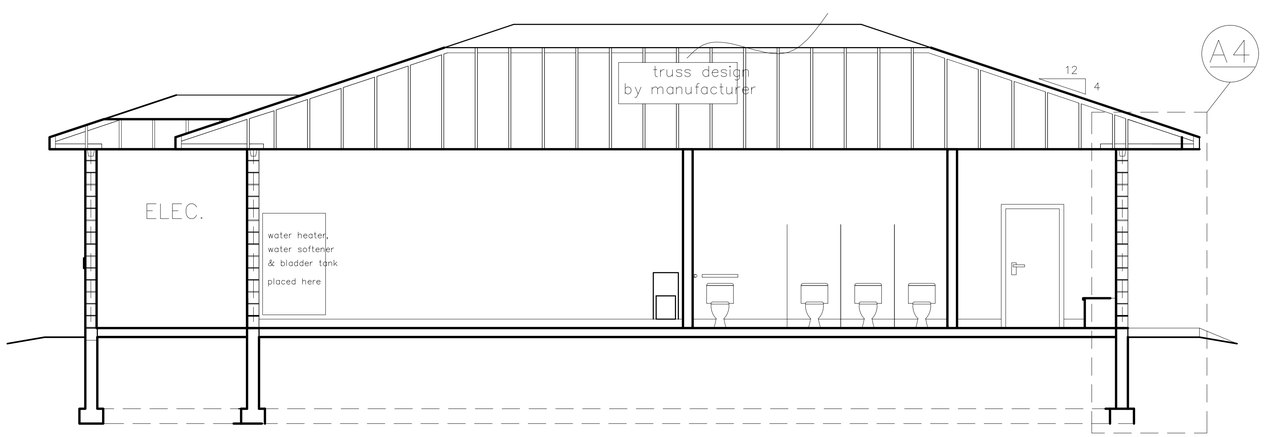

B3

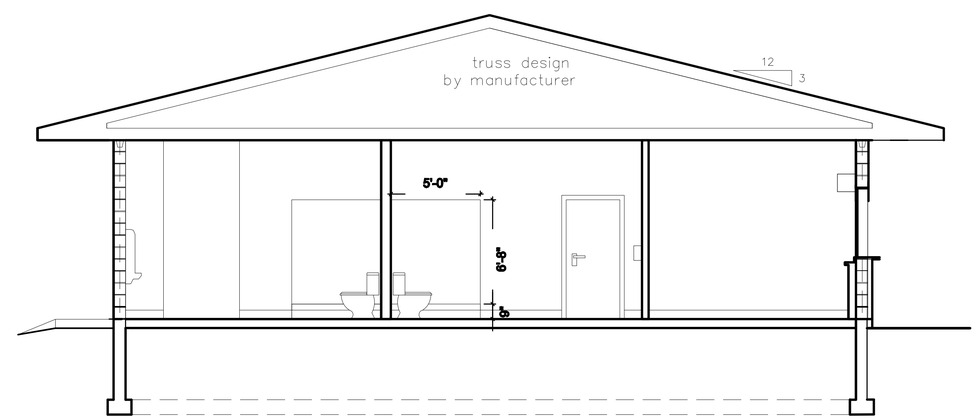

D3

NOTES:

8X16 BLOCK PERIMETER WALL. ALL OTHERS 2x4 STEEL STUD EXCEPT WHERE NOTED

5/8" SHEETROCK ON ALL WALLS EXCEPT RESTROOMS, CHANGING ROOMS AND CONCESSION AREA, DENS-ARMOR WILL BE ON THOSE WALLS (SEE SPECS)

5/8" SHEETROCK ON CEILINGS THROUGHOUT

BATHROOM STALL DIVIDERS FIBERGLASS REINFORCED PLASTIC (GENERAL PARTITIONS CO.) HIGHLY DURABLE AND GRAFFITI RESISTANT

General Notes

SHARP Concession/Equip. Storage
SOUTH HAVEN, MICHIGAN

Drawn: CAN / BAP

No.	Revision/Issue	Date

MIDWEST CIVIL
MCE
ENGINEERS, INC
CIVIL ENGINEERING, LAND SURVEYING, RESCUE
(269)-657-6155 SOUTH HAVEN, MI. WORD: 269-657-8203

SECTIONS

Sheet: 3

Date: 11/21/2013

Scale: 1/4" = 1'-0"

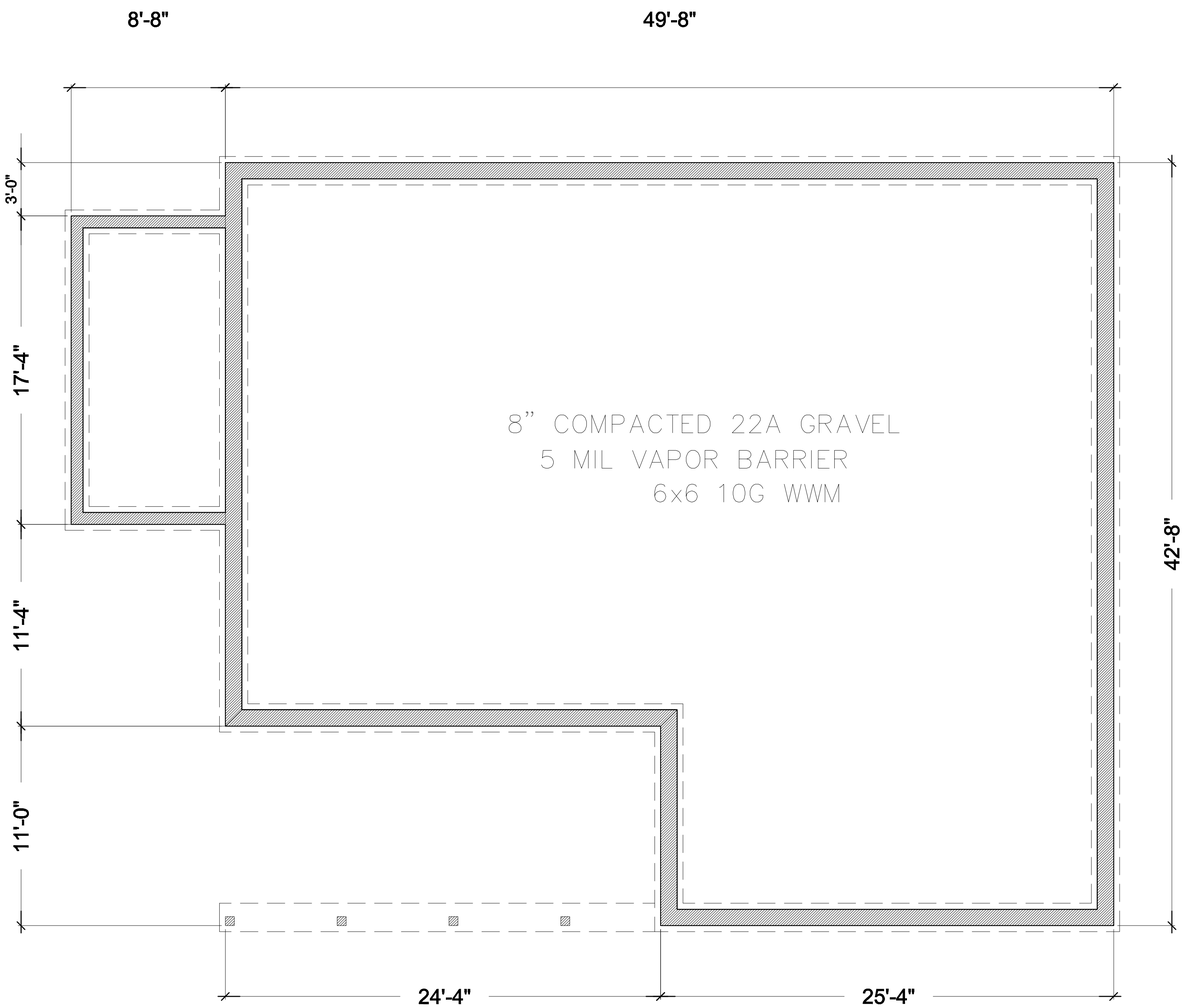

FOUNDATION

1/4"=1'-0"

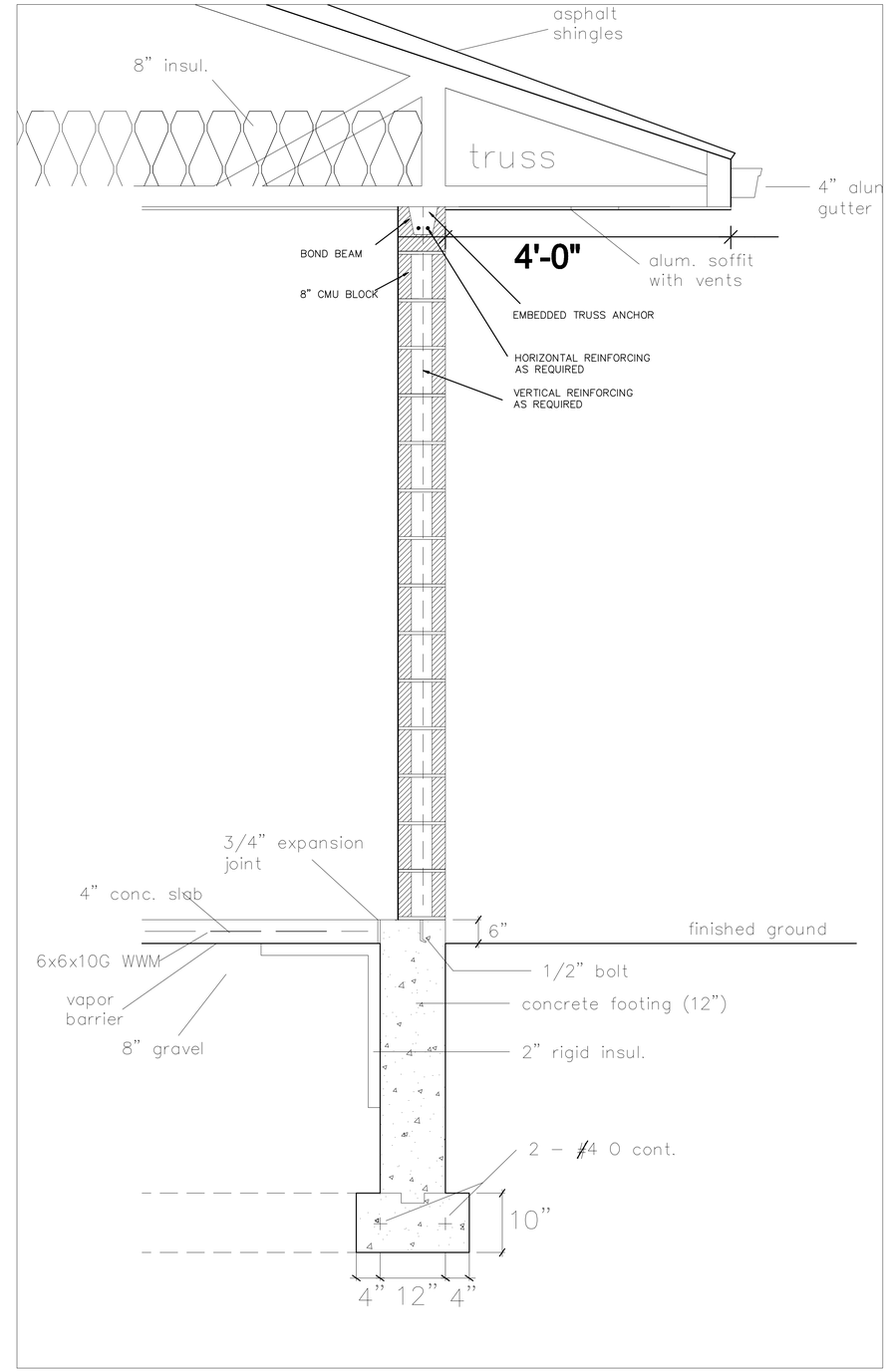

A/4 WALL SECTION

1"=1'-0"

General Notes

SHARP Concession/Equip. Storage
SOUTH HAVEN, MICHIGAN

Drawn: CAN / BAP

No.	Revision/Issue	Date

MIDWEST CIVIL MCE ENGINEERS, INC
CIVIL ENGINEERING, LAND SURVEYING, ARCHITECTURE
(269) 781-5151 - SOUTH HAVEN, MI. WORK - 269-637-2020

SECTIONS

Sheet: 4

Date: 11/21/2013

Scale: 1/4" = 1'-0"

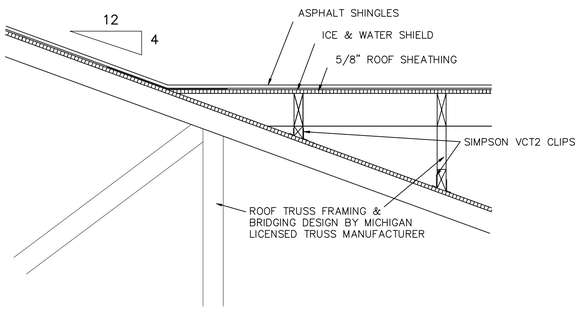

A/5 ROOF TRANSITION
SCALE: 1" = 1'-0"

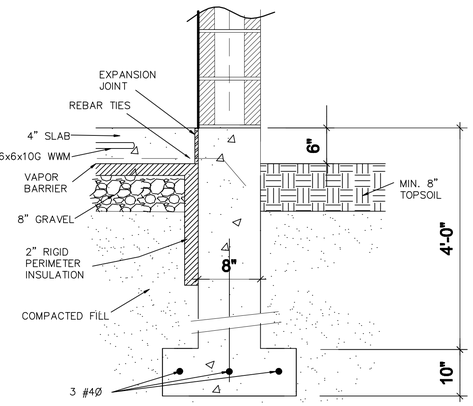

I/5 TYPICAL FOUNDATION
SCALE: 1" = 1'-0"

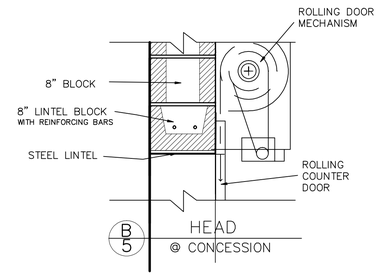

B/5 HEAD
@ CONCESSION

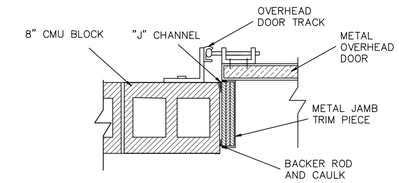

C/5 O.H. JAMB
@ EQUIP. ROOMS

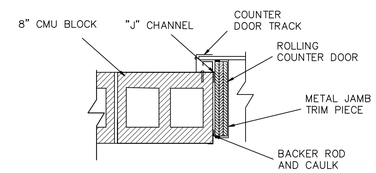

H/5 O.H. JAMB
@ CONCESSION

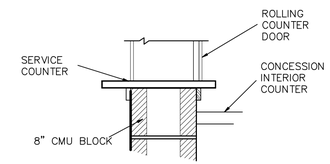

D/5 SILL
@ CONCESSION

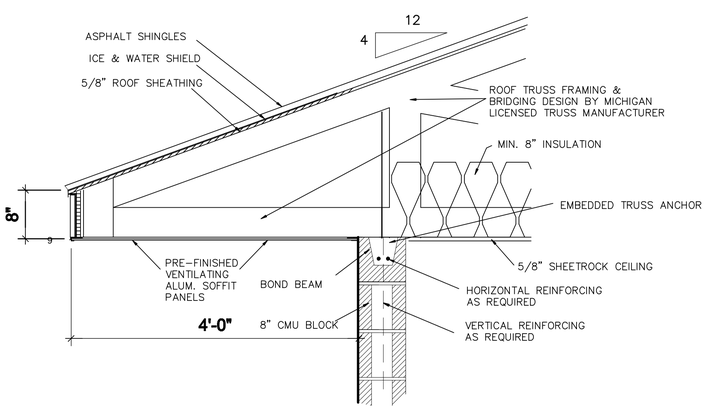

E/5 EAVE
SCALE: 1" = 1'-0"

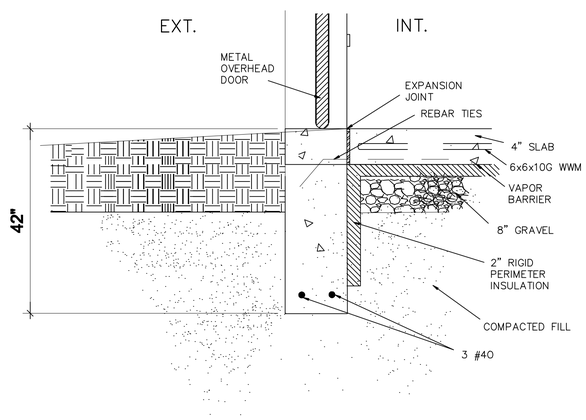

F/5 FOUND AT EQUIP. ROOM
SCALE: 1" = 1'-0"

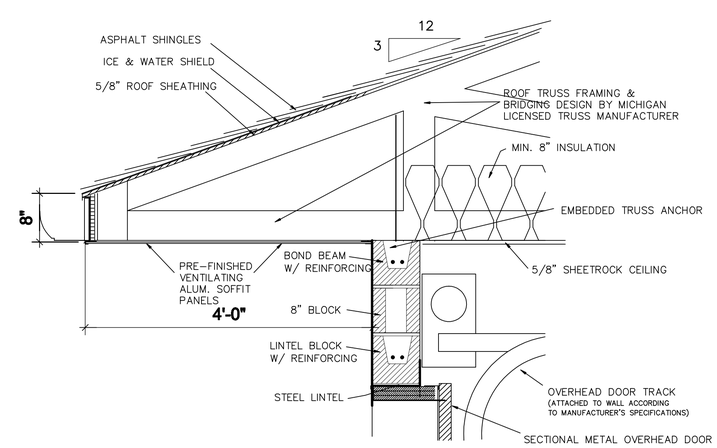

G/5 EAVE AT EQUIP. STORAGE
SCALE: 1" = 1'-0"

General Notes

SHARP Concession/Equip. Storage
SOUTH HAVEN, MICHIGAN

Drawn: CAN / BAP

No.	Revision/Issue	Date

MIDWEST CIVIL MCE ENGINEERS, INC
CIVIL ENGINEERING, LAND SURVEYING, RESTORATION
12940 CENTER ST. SOUTH HAVEN, MI 49090 - 269.637.2600

DETAILS

Sheet: 5

Project:
Date: 11/21/2013
Scale: 1/4" = 1'-0"

DOOR SCHEDULE

NO.	DOOR SIZE	DOOR TYPE	FRAME MAT.	FRAME FIN.	HRDWR SET NO.	REMARKS
100	3/0 x 6/8	B			B	
101	3/0 x 6/8	A			A	
102	3/0 x 6/8	A			A	
103	3/0 x 6/8	C			C	
104	3/0 x 6/8	C			C	
105	3/0 x 6/8	A			A	
107	3/0 x 6/8	C			C	
109	3/0 x 6/8	D			D	
110	3/0 x 6/8	D			D	

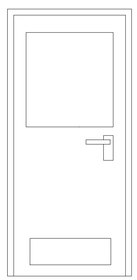

1 FLUSH PAINTED STEEL (P2) HALF LITE

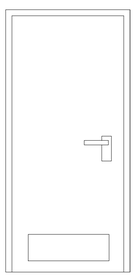

2 FLUSH PAINTED STEEL (P2)

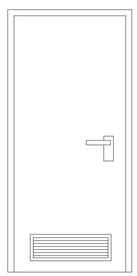

3 FLUSH PAINTED STEEL (P2)

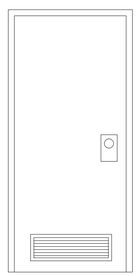

4 FLUSH PAINTED STEEL (P2)

HARDWARE:

(NOTE: ALL DOOR FRAMES 18 GUAGE)

Ⓐ 3 HINGES
1 LEVER LOCK SET
2 KICK PLATE
10"x35" US 32 D
1 CLOSER
1 ADA THRESHOLD
1 WEATHER STRIP
30"x30" SAFETY GLASS

Ⓑ 3 HINGES
1 LEVER LOCK SET
2 KICK PLATE
10"x35" US 32 D
1 CLOSER
1 ADA THRESHOLD
1 WEATHER STRIP
CUT FRAME FOR SCREEN DOOR

Ⓒ 3 HINGES
1 LEVER LOCK SET
1 VENT
10"x35" US 32 D
1 CLOSER
1 ADA THRESHOLD
1 WEATHER STRIP

Ⓓ 3 HINGES
1 CLOSER
1 LOCK SET
1 VENT
10"x35" US 32 D

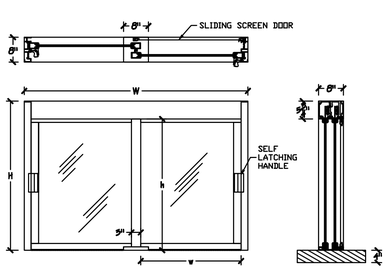

SERVICE WINDOW – CONCESSION
FRONT VIEW

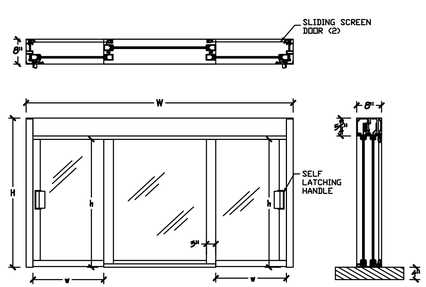

SERVICE WINDOW – REG. OFFICE
FRONT VIEW

ROLL-UP DOORS

	TYPE	R.O.	MANUFACTURER	NUMBER
100	1	4/0 x 6/0	C.H.I. O.H. DOORS	
101	2	4/0 x 4/0	C.H.I. O.H. DOORS	
108a&b	3	8/0 x 8/0		

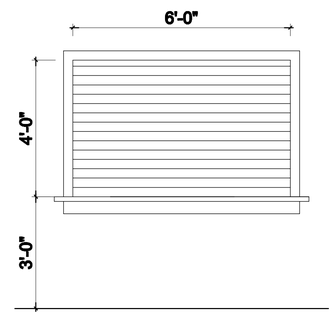

1

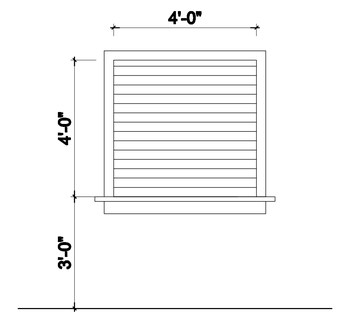

2

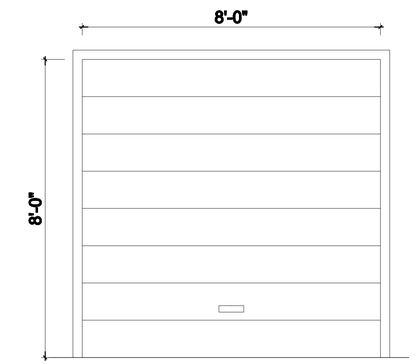

3

ROOM FINISH SCHEDULE

		FLOORS CONC.	FLOORS VINYL **	BASE CONC.	BASE VINYL	NORTH MATERIAL	NORTH FINISH	SOUTH MATERIAL	SOUTH FINISH	EAST MATERIAL	EAST FINISH	WEST MATERIAL	WEST FINISH	CEILING MATERIAL	CEILING FINISH
100	Concession Area					DAP	P2	BLK	P2	DAP	P2	BLK	P2	GYP	P2
101	Registration Office					DAP		BLK		DAP		BLK			
102	Entry A					DAP		DAP		BLK		DAP			
103	Women's Restroom					DAP		DAP		DAP		DAP			
104	Changing Room A					DAP		BLK		BLK		DAP			
105	Entry B					BLK		DAP		BLK		DAP			
106	Men's Restroom					BLK		DAP		DAP		DAP			
107	Changing Room B					DAP		DAP		BLK		DAP			
108	Equipment Room					BLK		DAP		DAP		BLK			
109	Electrical Room					BLK		BLK		BLK		BLK			
110	Janitor's Closet					DAP		DAP		DAP		BLK			

NOTES:
DAP = DENS ARMOR PLUS IMPACT RESISTANT INTERIOR PANEL
VINYL ** = POLYFLOR VINYL SHEET SAFETY FLOORING

General Notes

SHARP Concession/Equip. Storage
SOUTH HAVEN, MICHIGAN

Drawn: CAN / BAP

No.	Revision/Issue	Date

MIDWEST CIVIL ENGINEERS, INC
MCE
CIVIL ENGINEERING LAND SURVEYING WATERSHEDS
39400 TIERS ST. SOUTH HAVEN, MI. 49090 - 269.637.9200

SCHEDULES

Sheet 6

Project
Date
Scale 1/4" = 1'-0"

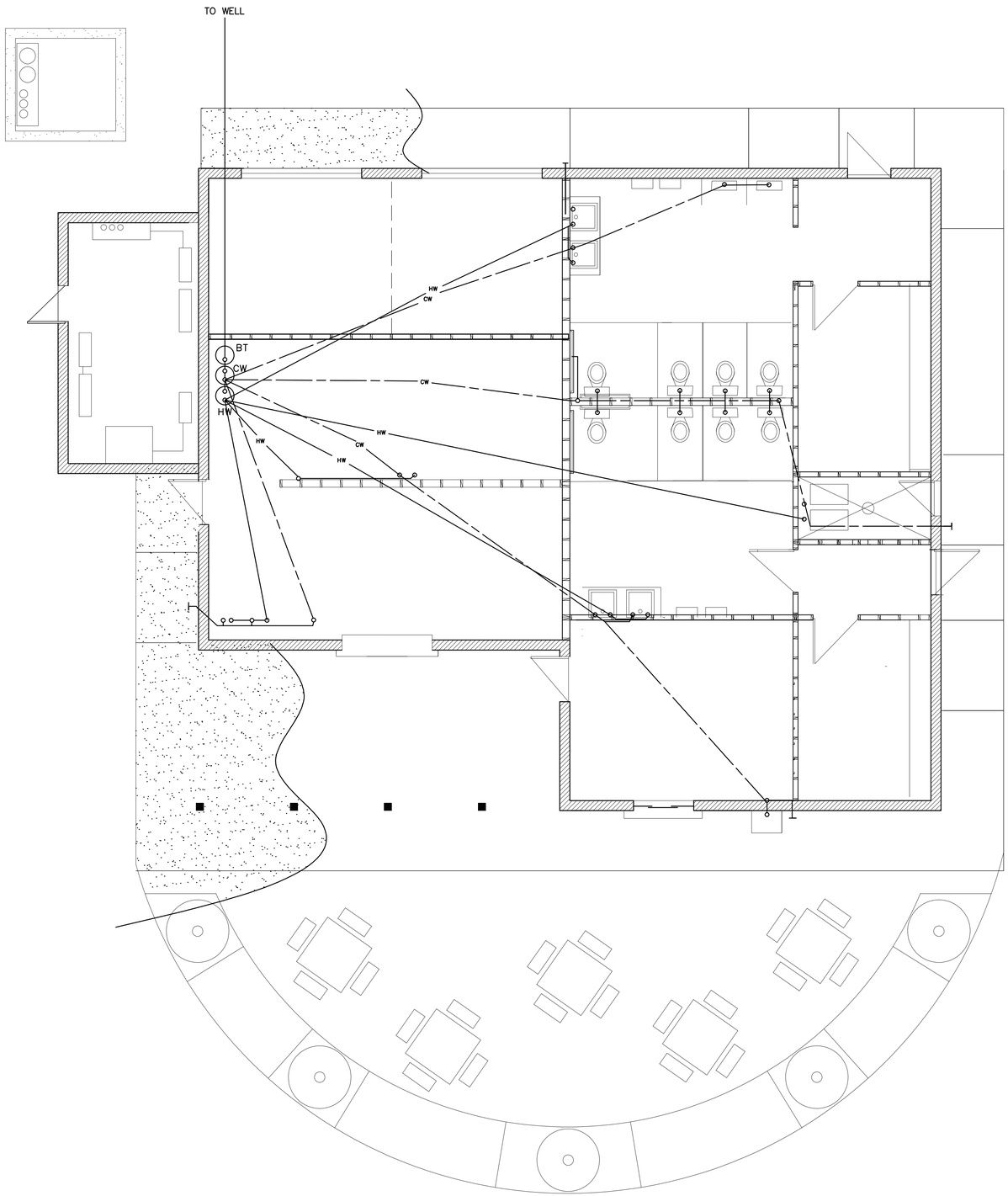

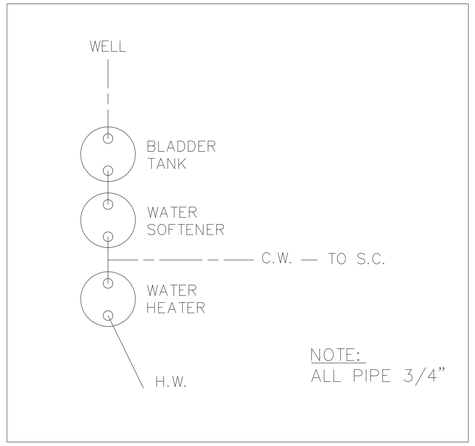

PLUMBING 1

1/4"=1'-0"

General Notes

SHARP Concession/Equip. Storage
SOUTH HAVEN, MICHIGAN

Drawn: CAN / BAP

No.	Revision/Issue	Date

MIDWEST CIVIL MCE ENGINEERS, INC
CIVIL ENGINEERING LAND SURVEYING ARCHITECTURE
59660 765 W. SOUTH HAVEN, MI. 49090 - 269.637.9009

PLUMBING

Sheet: 7

Date: 11/21/2013

Scale: 1/4" = 1'-0"

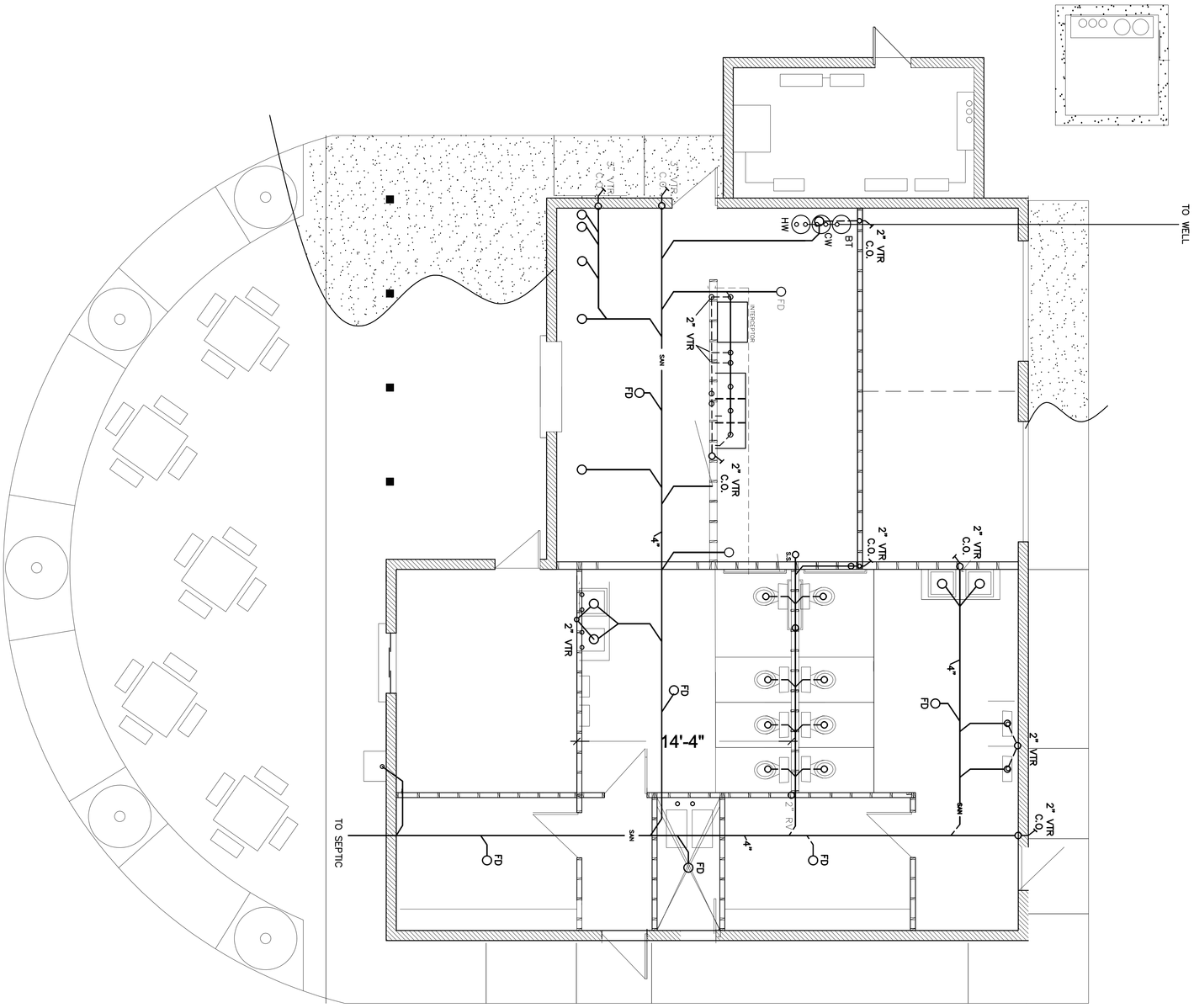

PLUMBING 2

1/4" = 1'-0"

Project	8	PLUMBING	MIDWEST CIVIL MCE ENGINEERS, INC. CIVIL ENGINEERING LAND SURVEYING ARCHITECTURE 15460 16th St. South Haven, MI. 49090 - 269.637.9209	CAN / BAP	SHARP Concession/Equip. Storage SOUTH HAVEN, MICHIGAN
Date 11/21/2013					
Scale 1/4" = 1'-0"					

No.	Revision/Issue	Date

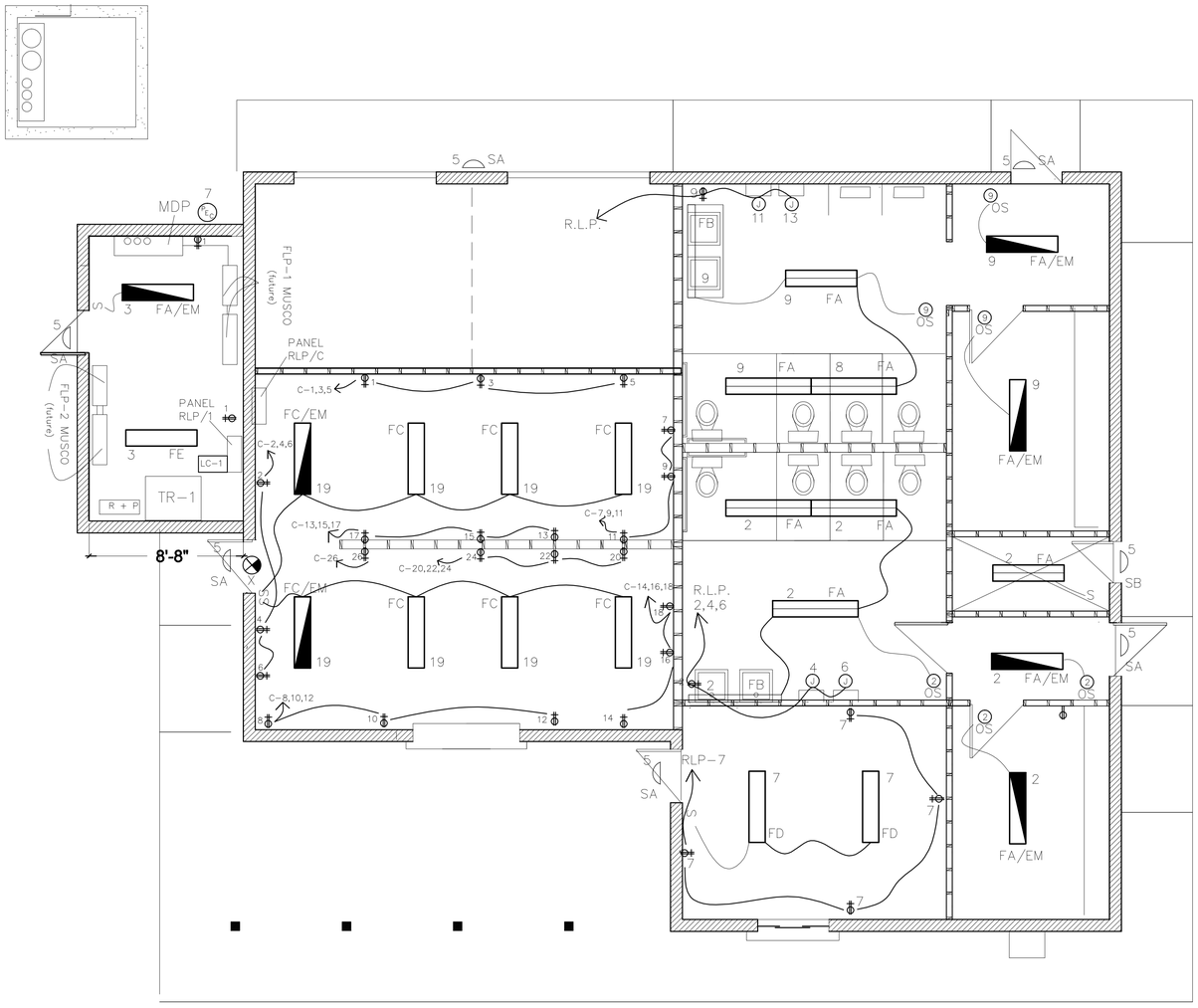

Fixture Schedule:

FA	Lithonia VDS 232 MVolt GEB10IS
FA/EM	Lithonia VDS 232 MVolt GEB10IS-EL14DW
FB	Lithonia VDC 232 MVolt GEB10IS
FC	Lithonia VSL 232 MVolt GEB10IS
FC/EM	Lithonia VSL 232 MVolt GEB10IS ELDW
FD	Lithonia LB 232 MVolt GEB10IS
FE	Lithonia EJS 232 MVolt GEB10IS WGEJZ
FE/EM	Lithonia EJS 232 MVolt GEB10IS EL14 WGEJZ
X	Lithonia LVS W1R 120/277V UM EL N
SA	Econolight E-WP4L06NZ
SB	Econolight E-WP1L03NZ
SP	*400 Watt MH Fixtures Mntd. on 8' DAVIT Arms & 35' class 5 wood poles
SR	*400 Watt MH Fixtures Mntd. on 8' DAVIT Arms & 35' class 5 wood poles

*American Electric Cobrahead
CAt. No. 325 40MSC277R3FGLCSH

Devices:

S	Single Pole Toggle Switch Leviton No. CSB-1-20
OS	Occupancy Sensor Leviton No. ODCOS-I1
	GFI Outlet Leviton No. BR20
PEC	Photo Electric Cell Intermatic No. K44221C
LC-1	Lighting Contacts Square D, Cat #DPA12V02 w/DPG-1 Enclosure

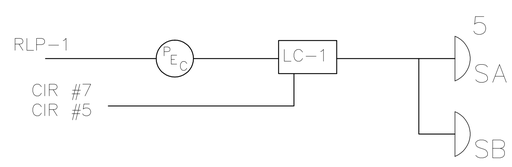

LIGHTING

1/4"=1'-0"

General Notes

SHARP Concession/Equip. Storage
SOUTH HAVEN, MICHIGAN

Drawn: CAN / BAP

No.	Revision/Issue	Date

MIDWEST CIVIL MCE ENGINEERS, INC
CIVIL ENGINEERING LAND SURVEYING RESCUE
39600 765 W. SOPHIA DR., SOPHIA DR., MICHIGAN 49082 - 269.657.9020

ELEC.

Sheet: 9

Date: 11.15.2013

Scale: 1/4" = 1'-0"

MDP-1 1200A, 480V/277, 3-PHASE, 4-WIRE, M.L.O.

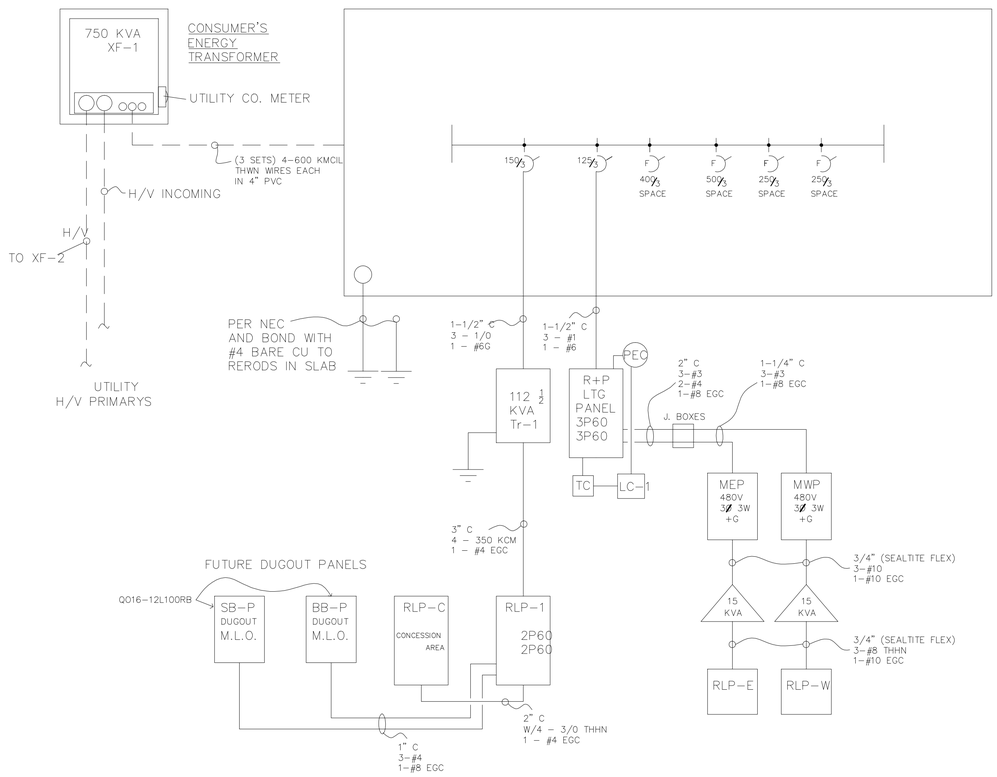

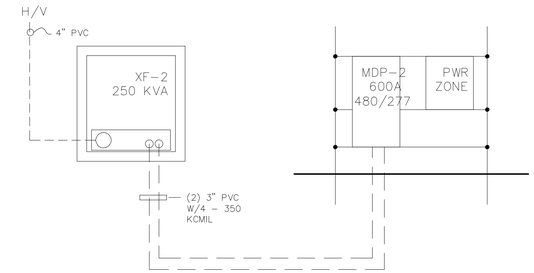

MDP-2 (NEMA 3R)

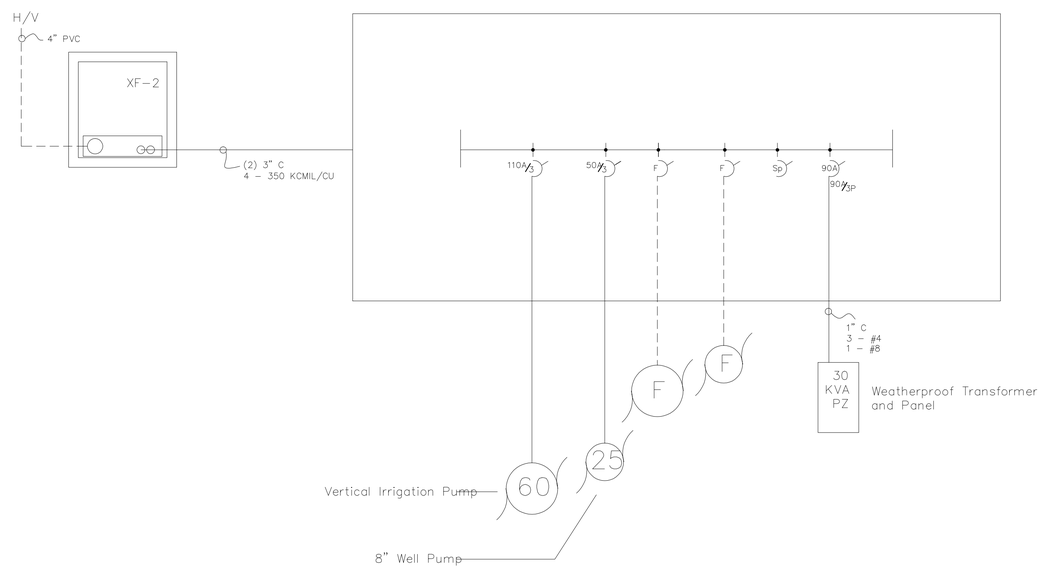

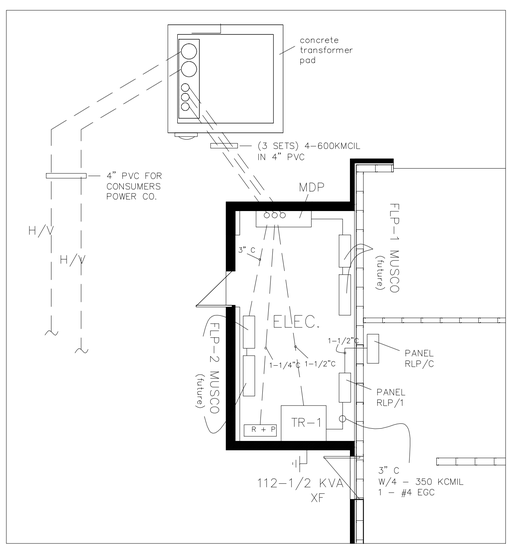

NOTE:

All work by the electrical contractor shall be performed per current National Electric Code (2011), per current Michigan Electric Code (2011), and per NEC, Section 110-3(A) and (B).
The wiring methods shall be suitable for the installation and use in conformity with provisions of the NEC, and listed OT labeled equipment shall be used or installed in accordance with any instructions in the listing or labeling.

ROADWAY LIGHTING POLE BASE CONDUIT & J.B. DETAILS

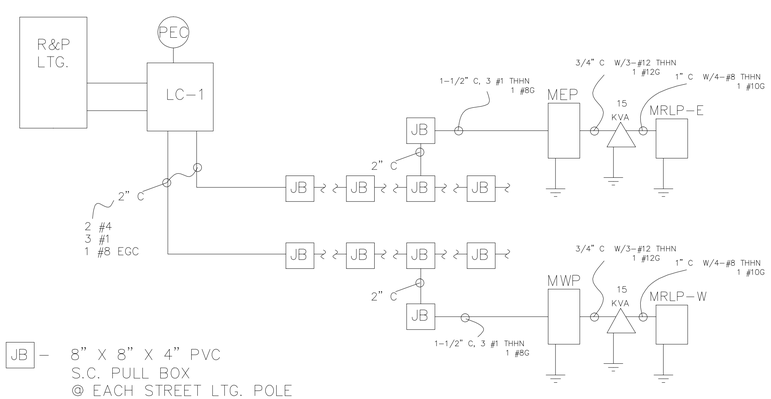

General Notes

SHARP Concession/Equip. Storage
SOUTH HAVEN, MICHIGAN

Drawn CAN / BAP

No.	Revision/Issue	Date

MIDWEST CIVIL MCE ENGINEERS, INC
CIVIL ENGINEERING LAND SURVEYING INTERIORS
(586) 781-9.5 SOUTH VENTA, MI 48090 586-697-7205

ELEC. DETAILS

Sheet 10

Project

Date 11.15.2013

PANEL: MDP-1 — LOCATION: ELECTRIC ROOM

WIRE SIZE BRANCH CIRCUIT	NOTES	LOAD DESCRIPTION	CIRCUIT BREAKER	LOAD (VA)	BRANCH CIRCUIT NO.	BRANCH CIRCUIT NO.	LOAD (VA)	CIRCUIT BREAKER	LOAD DESCRIPTION	NOTES	BRANCH CIRCUIT WIRE SIZE
1/0		TRANSFORMER TR-1 112-1/2 KVA 480V/208, 3-PHASE, 4-WIRE	150/3P		1	2		125/3P	R+P LTG. PANEL 480/277V 3-PHASE, 4-WIRE		1
					3	4					
					5	6					
					7	8					
					9	10					
					11	12					
					13	14					
					15	16					
					17	18					
					19	20					
					21	22					
					23	24					
					25	26					
					27	28					
					29	30					
					VA						

MOUNTING	SURFACE	TOTAL CONNECTED (VA)	
LUGS OR CIRCUIT BREAKER	M.L.O.	TOTAL CONNECTED (AMPS)	
BUS RATING (AMPERES) & TYPE	1200 A CU	FEEDER: (3)3"PVC W/4-600 KCMIL	
VOLTAGE	480/277V, 3Ø, 4W	OPTIONS:	

PANEL: MDP-2 — LOCATION: ADJACENT TO TRANSFORMER T-2

WIRE SIZE BRANCH CIRCUIT	NOTES	LOAD DESCRIPTION	CIRCUIT BREAKER	LOAD (VA)	BRANCH CIRCUIT NO.	BRANCH CIRCUIT NO.	LOAD (VA)	CIRCUIT BREAKER	LOAD DESCRIPTION	NOTES	BRANCH CIRCUIT WIRE SIZE
2		60 HP Vertical Irrigation Pump 480V, 3-Phase	110/3P	63987	1	2	28254	70/3P	25 HP 8" Well Pump 480V, 3-Phase, 4-Wire		4
					3	4					
					5	6					
		Future			7	8			Future		
					9	10					
					11	12					
		Space			13	14	29916	90/3P	30 KVA Transformer/Panel POWERZONE 480/208V, 3-Phase, 4-Wire		4
					15	16					
					17	18					
					19	20					
					21	22					
					23	24					
					25	26					
					27	28					
					29	30					
					VA						

MOUNTING	SURFACE	TOTAL CONNECTED (VA)	
LUGS OR CIRCUIT BREAKER	M.L.O.	TOTAL CONNECTED (AMPS)	
BUS RATING (AMPERES) & TYPE	1200 A CU	FEEDER: (3)3"PVC W/4-600 KCMIL	
VOLTAGE	480/277V, 3Ø, 4W	OPTIONS:	

PANEL: R+PLP (Roadway & Parking Lot Lighting) — LOCATION: ELEC. ROOM

WIRE SIZE BRANCH CIRCUIT	NOTES	LOAD DESCRIPTION	CIRCUIT BREAKER	LOAD (VA)	BRANCH CIRCUIT NO.	BRANCH CIRCUIT NO.	LOAD (VA)	CIRCUIT BREAKER	LOAD DESCRIPTION	NOTES	BRANCH CIRCUIT WIRE SIZE
4		LC-1 Roadway Street Lighting	1P20	3600	1	2	12000	3P 60	Feed to MP-1 Maintenance East		3
4		LC-1 Roadway Street Lighting	1P20	3600	3	4					
6		LC-2 Parking Lot Lighting	1P20	1600	5	6					
10		2 HP Septic Pump	3P 15	2825	7	8	2825	3P 15	2 HP Septic Pump		10
					9	10					
					11	12					
10		5" Well Pump	3P 15	8965	13	14	7500	3P 60	Feed to MP-2 Maintenance West		3
					15	16					
					17	18					
					19	20					
					21	22					
					23	24					
					25	26					
					27	28					
					29	30					
					31	32					
					33	34					
					35	36					
					37	38					
					39	40					
					41	42					
					VA						

MOUNTING	SURFACE	TOTAL CONNECTED (VA)	
LUGS OR CIRCUIT BREAKER	125A MLO	TOTAL CONNECTED (AMPS)	
BUS RATING (AMPERES) & TYPE	125A CU	FEEDER: 1-1/2"C, 4-#1 THHN, 1-#8 EGC	
VOLTAGE	480/277V, 3Ø, 4W	OPTIONS:	

PANEL: RLP-1 — LOCATION: ELEC. ROOM

WIRE SIZE BRANCH CIRCUIT	NOTES	LOAD DESCRIPTION	CIRCUIT BREAKER	LOAD (VA)	BRANCH CIRCUIT NO.	BRANCH CIRCUIT NO.	LOAD (VA)	CIRCUIT BREAKER	LOAD DESCRIPTION	NOTES	BRANCH CIRCUIT WIRE SIZE
12		Electric Rm GFI outlets	1P20	360	1	2	628	1P20	W Restroom Lighting and GFI		12
12		Electric Rm. Lighting		128	3	4	1800		W Restroom H.D.		12
12		Bldg. Mtd. Security Lighting		500	5	6	1800		W Restroom H.D.		12
12		Photo Elec. Cell		180	7	8	848		Office Lighting and Outlets		
12		M Restroom Lighting and GFI		628	9	10			Space		
12		M Restroom HD		1800	11	12					
12		M Restroom HD		1800	13	14					
		Space			15	16					
					17	18					
					19	20					
					21	22					
					23	24					
					25	26					
					27	28					
			1P20		29	30		1P20			
4		Softball (SB-P) Dugout and Scoreboard	2P 60		31	32		2P 60	Baseball (BB-P) Dugout		4
					33	34					
					35	36					
					37	38					
					39	40					
					41	42					
					VA						

MOUNTING	SURFACE	TOTAL CONNECTED (VA)	
LUGS OR CIRCUIT BREAKER	MCB	TOTAL CONNECTED (AMPS)	
BUS RATING (AMPERES) & TYPE	400A CU	FEEDER: 3"C, 4-350 KCMIL, 1-#4 EGC	
VOLTAGE	120/208V, 3Ø, 4W	OPTIONS: 200A/3P Sub Feed CB	

PANEL: RLP-C — LOCATION:

WIRE SIZE BRANCH CIRCUIT	NOTES	LOAD DESCRIPTION	CIRCUIT BREAKER	LOAD (VA)	BRANCH CIRCUIT NO.	BRANCH CIRCUIT NO.	LOAD (VA)	CIRCUIT BREAKER	LOAD DESCRIPTION	NOTES	BRANCH CIRCUIT WIRE SIZE
12		Concession Area Gen. Outlet GFI	1P20	180	1	2	1000	1P20	Concession Refridgerator Outlet GFI		12
		Concession Area Gen. Outlet GFI		180	3	4	1000		Concession Freezer Outlet GFI		
		Concession Area Gen. Outlet GFI		180	5	6	500		Concession Microwave Outlet		
		Concession Area Gen. Outlet GFI		180	7	8	1100		Concession Nacho Cheese Outlet		
		Concession Area Gen. Outlet GFI		180	9	10	1000		Concession Reach In Cooler Outlet		
		Concession Area Gen. Outlet GFI		180	11	12	1000		Concession General Outlets GFI		
		Concession Area Gen. Outlet GFI		180	13	14	180		Concession General Outlets GFI		
		Concession Area Gen. Outlet GFI		180	15	16	180		Concession General Outlets GFI		
		Concession Area Gen. Outlet GFI		180	17	18	180		Concession General Outlets GFI		
12		Concession Interior Lighting		512	19	20	180		Concession General Outlets GFI		
		Spare			21	22	180		Concession General Outlets GFI		
		Spare	1P20		23	24	180	1P20	Concession General Outlets GFI		
		Spare	1P20		25	26	180	1P20	Concession General Outlets GFI		12
		Space			27	28			Space		
					29	30					
					31	32					
					33	34					
					35	36					
					37	38					
					39	40					
					41	42					
				2132	VA		6860				

MOUNTING		TOTAL CONNECTED (VA)	8992
LUGS OR CIRCUIT BREAKER	M.L.O.	TOTAL CONNECTED (AMPS)	43.23
BUS RATING (AMPERES) & TYPE	225 A CU	FEEDER: 2"C, 4-3/0 THHN, 1-#4 EGC	
VOLTAGE	120/208V, 3Ø, 4W	OPTIONS:	

PANEL: MP-EAST — LOCATION: MAINT. BLDG.

WIRE SIZE BRANCH CIRCUIT	NOTES	LOAD DESCRIPTION	CIRCUIT BREAKER	LOAD (VA)	BRANCH CIRCUIT NO.	BRANCH CIRCUIT NO.	LOAD (VA)	CIRCUIT BREAKER	LOAD DESCRIPTION	NOTES	BRANCH CIRCUIT WIRE SIZE
10		15 KVA TRANSFORMER	3P 25	20ASP	1	2	20ASP	3P 25	10 HP 5" WELL PUMP		
				20ASP	3	4	20ASP				
				20ASP	5	6	20ASP				
				20ASP	7	8	20ASP				
				20ASP	9	10	20ASP				
				20ASP	11	12	20ASP				
				20ASP	13	14	20ASP				
				20ASP	15	16	20ASP				
				20ASP	17	18	20ASP				
				20ASP			20ASP				
					VA						

MOUNTING	SURFACE	TOTAL CONNECTED (VA)	
LUGS OR CIRCUIT BREAKER	M.L.O.	TOTAL CONNECTED (AMPS)	
BUS RATING (AMPERES) & TYPE	100 A CU	FEEDER: 1-1/4"C, 3-#3 THHN, 1-#8 EGC	
VOLTAGE	480V, 3Ø, 3W +G	OPTIONS:	

PANEL: MRLP - E — LOCATION: MAINT. BLDG. (EAST)

WIRE SIZE BRANCH CIRCUIT	NOTES	LOAD DESCRIPTION	CIRCUIT BREAKER	LOAD (VA)	BRANCH CIRCUIT NO.	BRANCH CIRCUIT NO.	LOAD (VA)	CIRCUIT BREAKER	LOAD DESCRIPTION	NOTES	BRANCH CIRCUIT WIRE SIZE
12		BLDG. & STOR. LIGHTS & GFI		20ASP	1	2	20ASP	3P 50	BACKFEED MAIN CIRCUIT BREAKER		8
12		BLDG. & STOR. LIGHTS & GFI		20ASP	3	4	20ASP				
				20ASP	5	6	20ASP				
				20ASP	7	8	20ASP				
				20ASP	9	10	20ASP				
				20ASP	11	12	20ASP				
				20ASP	13	14	20ASP				
				20ASP	15	16	20ASP				
				20ASP	17	18	20ASP				
				20ASP			20ASP				
					VA						

MOUNTING	SURFACE	TOTAL CONNECTED (VA)	
LUGS OR CIRCUIT BREAKER	M.C.B.	TOTAL CONNECTED (AMPS)	
BUS RATING (AMPERES) & TYPE	100 A CU	FEEDER:	
VOLTAGE	120/208V, 3Ø, 4W	OPTIONS:	

PANEL: MP-WEST — LOCATION: MAINT. BLDG.

WIRE SIZE BRANCH CIRCUIT	NOTES	LOAD DESCRIPTION	CIRCUIT BREAKER	LOAD (VA)	BRANCH CIRCUIT NO.	BRANCH CIRCUIT NO.	LOAD (VA)	CIRCUIT BREAKER	LOAD DESCRIPTION	NOTES	BRANCH CIRCUIT WIRE SIZE
10		15 KVA TRANSFORMER	3P 25	20ASP	1	2	20ASP				
				20ASP	3	4	20ASP				
				20ASP	5	6	20ASP				
				20ASP	7	8	20ASP				
				20ASP	9	10	20ASP				
				20ASP	11	12	20ASP				
				20ASP	13	14	20ASP				
				20ASP	15	16	20ASP				
				20ASP	17	18	20ASP				
				20ASP			20ASP				
					VA						

MOUNTING	SURFACE	TOTAL CONNECTED (VA)	
LUGS OR CIRCUIT BREAKER	M.L.O.	TOTAL CONNECTED (AMPS)	
BUS RATING (AMPERES) & TYPE	100 A CU	FEEDER: 1-1/4"C, 4-#3 THHN, 1-#8 EGC	
VOLTAGE	480V, 3Ø, 3W +G	OPTIONS:	

PANEL: MRLP - W — LOCATION: MAINT. BLDG. (WEST)

WIRE SIZE BRANCH CIRCUIT	NOTES	LOAD DESCRIPTION	CIRCUIT BREAKER	LOAD (VA)	BRANCH CIRCUIT NO.	BRANCH CIRCUIT NO.	LOAD (VA)	CIRCUIT BREAKER	LOAD DESCRIPTION	NOTES	BRANCH CIRCUIT WIRE SIZE
		BLDG. & STOR. LIGHTS & GFI		20ASP	1	2	20ASP	3P 50	BACKFEED MAIN CIRCUIT BREAKER		8
				20ASP	3	4	20ASP				
				20ASP	5	6	20ASP				
				20ASP	7	8	20ASP				
				20ASP	9	10	20ASP				
				20ASP	11	12	20ASP				
				20ASP	13	14	20ASP				
				20ASP	15	16	20ASP				
				20ASP	17	18	20ASP				
				20ASP			20ASP				
					VA						

MOUNTING	SURFACE	TOTAL CONNECTED (VA)	
LUGS OR CIRCUIT BREAKER	M.C.B.	TOTAL CONNECTED (AMPS)	
BUS RATING (AMPERES) & TYPE	100 A CU	FEEDER:	
VOLTAGE	120/208V, 3Ø, 4W	OPTIONS:	

PANEL: SB-P — LOCATION: SOFTBALL FIELD DUGOUT STORAGE

WIRE SIZE BRANCH CIRCUIT	NOTES	LOAD DESCRIPTION	CIRCUIT BREAKER	LOAD (VA)	BRANCH CIRCUIT NO.	BRANCH CIRCUIT NO.	LOAD (VA)	CIRCUIT BREAKER	LOAD DESCRIPTION	NOTES	BRANCH CIRCUIT WIRE SIZE
		DUGOUT STORAGE LIGHTS & GFI		20ASP	1	2	20ASP		DUGOUT STORAGE LIGHTS & GFI		
		SCOREBOARD		20ASP	3	4	20ASP				
				20ASP	5	6	20ASP				
				20ASP	7	8	20ASP				
				20ASP	9	10	20ASP				
				20ASP	11	12	20ASP				
				20ASP	13	14	20ASP				
				20ASP	15	16	20ASP				
				20ASP	17	18	20ASP				
				20ASP			20ASP				
					VA						

MOUNTING	SURFACE	TOTAL CONNECTED (VA)	
LUGS OR CIRCUIT BREAKER	M.L.O.	TOTAL CONNECTED (AMPS)	
BUS RATING (AMPERES) & TYPE	100 A CU	FEEDER: 1"C, 3-#4 THHN, 1-#8 EGC	
VOLTAGE	120/208, 1Ø, 3W	OPTIONS:	

PANEL: BB-P — LOCATION: BASEBALL FIELD DUGOUT STORAGE

WIRE SIZE BRANCH CIRCUIT	NOTES	LOAD DESCRIPTION	CIRCUIT BREAKER	LOAD (VA)	BRANCH CIRCUIT NO.	BRANCH CIRCUIT NO.	LOAD (VA)	CIRCUIT BREAKER	LOAD DESCRIPTION	NOTES	BRANCH CIRCUIT WIRE SIZE
		DUGOUT STORAGE LIGHTS & GFI		20ASP	1	2	20ASP		DUGOUT STORAGE LIGHTS & GFI		
		SCOREBOARD		20ASP	3	4	20ASP				
				20ASP	5	6	20ASP				
				20ASP	7	8	20ASP				
				20ASP	9	10	20ASP				
				20ASP	11	12	20ASP				
				20ASP	13	14	20ASP				
				20ASP	15	16	20ASP				
				20ASP	17	18	20ASP				
				20ASP			20ASP				
					VA						

MOUNTING	SURFACE	TOTAL CONNECTED (VA)	
LUGS OR CIRCUIT BREAKER	M.L.O.	TOTAL CONNECTED (AMPS)	
BUS RATING (AMPERES) & TYPE	100 A CU	FEEDER: 1"C, 3-#4 THHN, 1-#8 EGC	
VOLTAGE	120/208, 1Ø, 3W	OPTIONS:	

MDP-1 1200A, 480/277V, 3P4W, +G
MLO, Surface Mnt., NEMA 1
Cat. No. HCP235912N; HCW12SN; HC4259DB/HCW59SD
W/--1-HGA36150 I-LINE CB
1-HGA36125 I-LINE CB
4-3 POLE SPACES (AS SHOWN)

112-1/2KVA DRY-TYPE TRANSFORMER; 480/208-120V
TR-1 CAT. NO. EE112T3H

R+P POWER PANEL --- 480 /277V, 3P4W +G MLO; SURFACE; NEMA 1
CAT. NO NF430L1; MH32; NC32SHR
W/--3-1P20A CB'S; 277V, MARK 1-A; 1-B, 1-C
2-3P60A CB'S; 480V
3-3P15A CB'S; 480V

MEP 100A, 480V, 3P-3W+G;MLO; SURFACE MNT. NEMA 1
CAT. NO. NF418L1; MH-26; NM26S
W/--2-EDB34025 CB'S; BALANCE SPACE

15KVA DRY TYPE TRANSFORMER; 480/208-120V, 3P-4W, NEMA 1
TR-2 CAT. NO. EE15T3H

MRLP-E 100A, 208-120V, 3P-4W, +G; MLO SURFACE MNT., NEMA 1
CAT. NO. 816DL 100S; PK7GTA
W/--1-3P50A CB (BACK FEED MCB) TYPE QOB
2-1P20A CB'S; BALANCE SPACE TYPE QOB

MWP 100A, 480V, 3P-3W+G; MLO; SURFACE MNT., NEMA 1
CAT. NO NF418L1; MH26; NC26S
2/--1-EDB34025 CB; BALANCE SPACE

15KVA DRY TYPE TRANSFORMER; 480/208-120V, 3P-4W, NEMA 1
TR-3 CAT. NO. EE15T3H

MRLP-W 100A, 208-120V, 3P-4W, +G; MLO SURFACE MNT., NEMA 1
CAT. NO. 816DL 100S; PK7GTA
W/--1-3P50A CB (BACK FEED CB) TYPE QOB
2-1P20A CB'S; BALANCE SPACE TYPE QOB

RLP-1 400A, 208-120V, 3P-4W+G, 300A MCB; SURFACE MNT., NEMA 1
CAT. NO. NQ472L4; NQMB4L4; LA36300; MH74; NC74VSHR
W/--1-200A, 3P, SUB-FEED CB
2-60A/2P CB'S TYPE QOB
11-1P20A CB'S

RLP-C 200A, 208-120V, 3P-4W+G; MLO; SURFACE MNT., NEMA 1
CAT. NO. NQ442L2; MH38; NC38SHR
W/--26-1P20A QOB CB'S; BALANCE SPACE

SB-P 100A, 208-120V, 2P-3W+G; MLO; SURFACE MNT., NEMA 3R
W/--3-1P20A ZO CB'S; BALANCE SPACE
CAT. NO. QO6-12L100RB

BB-P 100A, 208-120V, 2P-3W+G; MLO; SURFACE MNT., NEMA 3R
W/--3-1P20A ZO CB'S; BALANCE SPACE
CAT. NO. QO6-12L100RB

MDP-2 600A, 480/277V, 3P, 4W +G, MLO, SURFACE MNT., NEMA 3R
CAT.NO. HCM14486; HC3248WP
W/--1-KA36110 I-LINE CB
1-FA36070 I-LINE CB
1-FA36090 I-LINE CB

PWR 30KVA, 208/120V, 3P-4W+G, SURFACE MNT., NEMA 3R
CAT. NO. MPZ30T2F

General Notes

SHARP Concession/Equip. Storage
SOUTH HAVEN, MICHIGAN

Drawn: CAN / BAP

No.	Revision/Issue	Date

MIDWEST CIVIL
MCE
ENGINEERS, INC

ELEC.
DETAILS

Sheet
11

Date 11.15.2013

SOUTH HAVEN AREA REGIONAL PARK

PHASE I

CASCO TOWNSHIP, ALLEGAN COUNTY, MICHIGAN

DRAWING INDEX

CIVIL/ATHLETIC FIELDS

1. TITLE & LOCATION MAP
2. OVERALL SITE PLAN/UTILITY PLAN
3. OVERALL GRADING PLAN & SESC PLAN
4. POND DETAILS #1
5. POND DETAILS #2
6. ARSENIC REMOVAL PLAN
7. ROAD – PLAN & PROFILE
8. ROAD – PLAN & PROFILE
9. GRADING PLAN – FIELDS
10. GRADING PLAN – FIELDS
11. GRADING PLAN – FIELDS
12. BASEBALL/SOCCER FIELD – UNDERDRAIN PLAN
13. SOCCER FIELD – UNDERDRAIN PLAN
14. BASEBALL FIELD – UNDERDRAIN PLAN
15. BASEBALL FIELD & SOCCER FIELD LAYOUTS
16. LITTLE LEAGUE BASEBALL FIELD LAYOUT
17. FIELD DETAILS
18. BASEBALL FIELD FENCING/BACKSTOP
19. BASEBALL DUGOUTS
20. SITE DETAILS
21. EXISTING SITE/TREE REMOVAL

CONCESSION & EQUIPMENT STORAGE FACILITY

T. TITLE SHEET
1. FLOOR PLAN
2. ELEVATIONS
3. SECTIONS
4. FOUNDATION/WALL SECTION
5. DETAILS
6. SCHEDULES
7. PLUMBING (H20)
8. PLUMBING (SAN.)
9. LIGHTING
10. ELECTRICAL DETAILS
11. PANEL SCHEDULES

IRRIGATION PLANS

11. IRRIGATION DESIGN – TYPICAL BASEBALL
14. IRRIGATION DESIGN – TYPICAL SOCCER

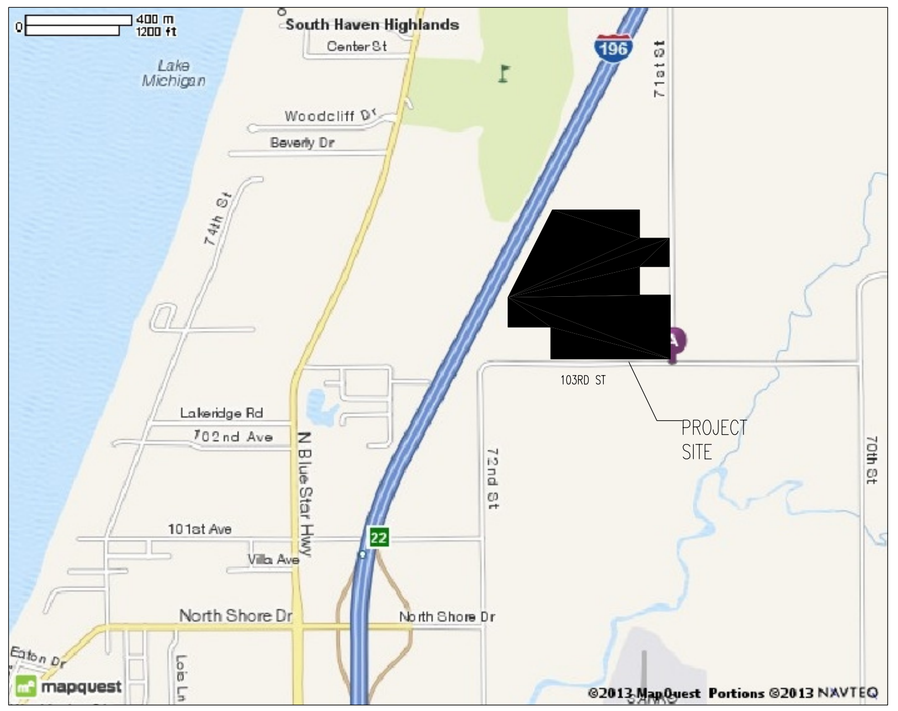

LOCATION MAP
NOT TO SCALE

PROJECT CONTACTS

CITY OF SOUTH HAVEN
539 PHOENIX STREET
SOUTH HAVEN, MI 49090
269-637-0760

SOUTH HAVEN AREA EMERGENCY SERVICES
90 BLUE STAR HIGHWAY
SOUTH HAVEN, MI 49090
269-637-5151

SHARP/
SOUTH HAVEN TOWNSHIP
09761 BLUE STAR HIGHWAY
SOUTH HAVEN, MI 49090
269-637-3305

ELECTRIC – CONSUMERS ENERGY
STEVEN DALTON
269-686-4421

GAS – MICHIGAN GAS UTILITY
711 STARLITE DR
BENTON HARBOR, MI 49022
800-778-3802

TELEPHONE – FRONTIER
ENGINEERING DEPARTMENT
PO BOX 99-US 131
THREE RIVERS, MI 49093
269-273-0346

3 WORKING DAYS
(72 HOURS)
BEFORE YOU DIG
CALL MISS DIG
1-800-482-7171
(TOLL FREE)

PUBLIC UTILITIES OF ALL TYPES HAVE BEEN SHOWN ON THESE PLANS USING THE INFORMATION AVAILABLE, BUT ARE NOT GUARANTEED AS ACCURATE OR THAT UTILITIES OTHER THAN THOSE SHOWN ARE NOT PRESENT. CONTRACTOR SHALL CONTACT MISS DIG AT 1-800-482-7171 FOR INFORMATION AND NOTIFY UTILITY COMPANIES THREE WORKING DAYS PRIOR TO COMMENCING WORK.

MCE
MIDWEST CIVIL ENGINEERS, INC.
CIVIL ENGINEERING • LAND SURVEYING • ARCHITECTURE
13560 76TH STREET
SOUTH HAVEN, MI 49090
PH: 269-637-9205
FX: 269-637-9206

SOUTH HAVEN AREA RECREATIONAL PARK
COVER SHEET

CASCO TOWNSHIP
ALLEGAN COUNTY

SHEET	OF	PROJECT NO.
1	21 SHEETS	11-041

SCALE:	DRAWN:	REVISIONS: 11/19/13 CHANGED PHASE I LIMITS
NO SCALE	03/2013 MD	

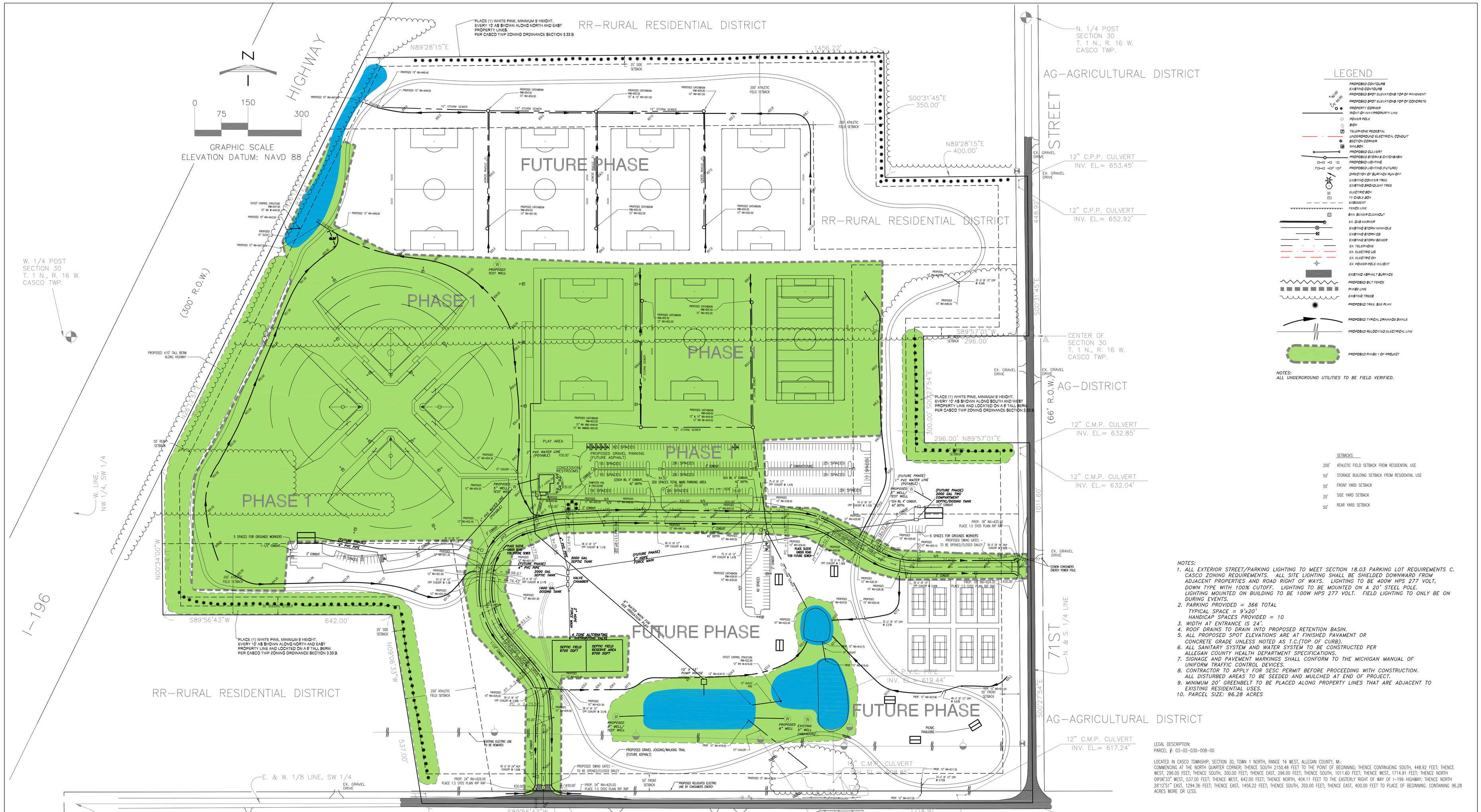

PROPOSED HIGHWAY BERM DETAIL
(not to scale)

NOTES:
-TOTAL LENGTH OF BERM = 1,025 FT

PROPOSED RESIDENTIAL BERM DETAIL
(not to scale)

NOTES:
-TOTAL LENGTH OF BERM = 1,665 FT

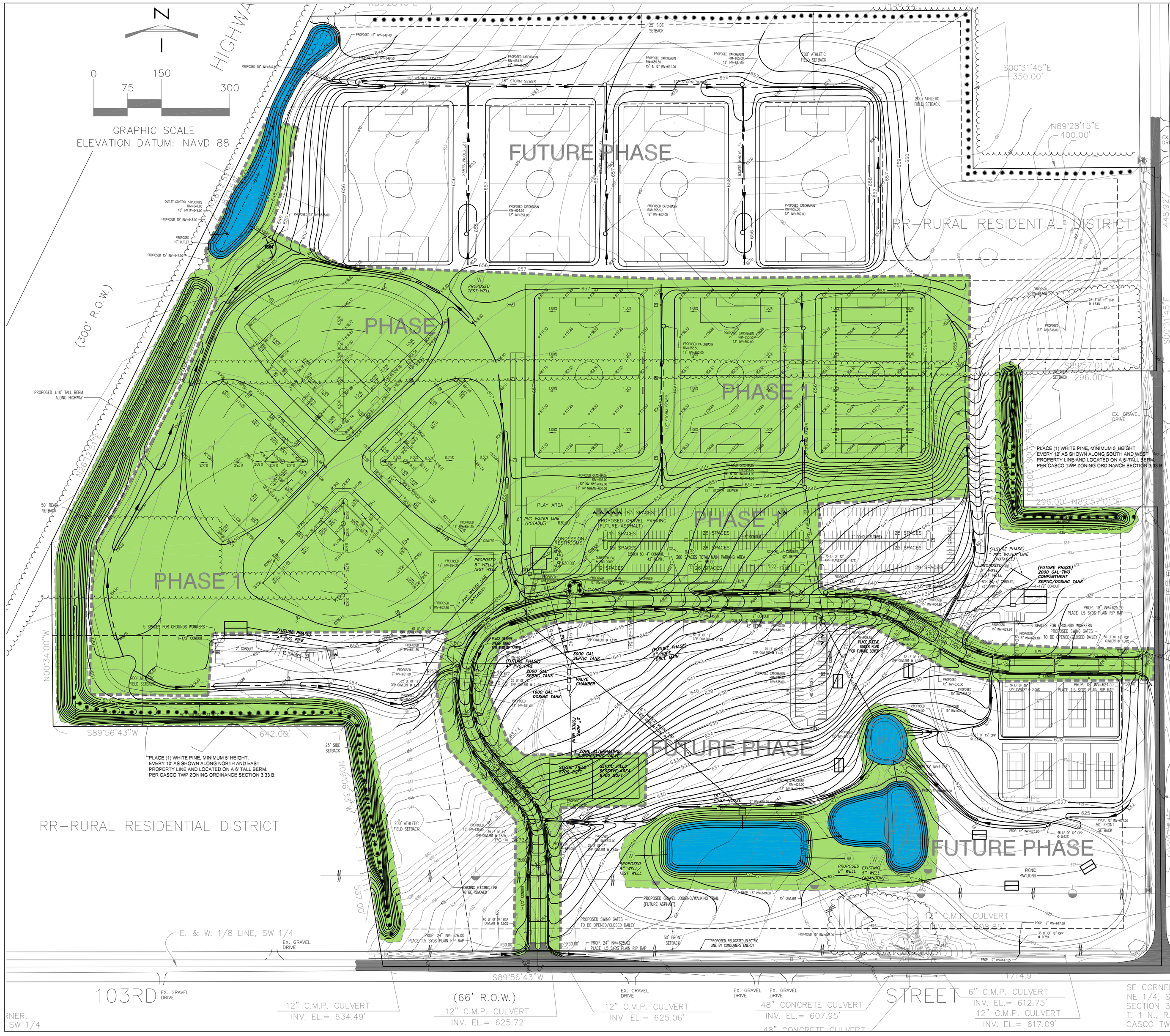

SOIL EROSION CONTROL NOTES

1. CONTRACTOR SHALL BE RESPONSIBLE FOR OBTAINING SOIL EROSION CONTROL PERMIT FROM OWNER. CONTRACTOR IS RESPONSIBLE FOR MAINTAINING THE SITE UNTIL VEGETATION IS REESTABLISHED.

2. PLACE EROSION CONTROL MEASURES AS INDICATED ON DRAWING PRIOR TO EARTH MOVING AND GRADING ACTIVITIES.

3. INSPECT AND MAINTAIN CHECK DAMS, SEDIMENT TRAPS, RIPRAP, SILT FENCING, AND OTHER MEASURES AFTER STORM EVENTS AND AS NECESSARY TO ASSURE PROPER FUNCTION.

4. TEMPORARY SEEDING FOR EROSION CONTROL CONSISTS OF THE FOLLOWING SEED MIX PLACED AT 5 LBS PER 1,000 SQUARE FEET:
   50 % PERENNIAL RYEGRASS
   35 % CREEPING RED FESCUE
   15 % KENTUCKY BLUEGRASS

5. EROSION CONTROL MEASURES SHALL REMAIN IN PLACE UNTIL VEGETATION IS UNIFORMLY ESTABLISHED. REGRADE, RESEED, AND PLACE ADDITIONAL TOPSOIL IN ERODED AREAS AS NECESSARY UNTIL FINAL LANDSCAPING IS INSTALLED.

6. ALL SWALES, SLOPES 1 ON 4 OR STEEPER, AND THE STORM WATER DETENTION AREA SHALL BE SEEDED AND MULCHED WITH NORTH AMERICAN GREEN S150 EROSION CONTROL BLANKET AS INDICATED ON DRAWINGS.

7. CONSTRUCTION OF SEDIMENT BASINS AND DIVERSION DITCHES SHALL BE COMPLETED PRIOR TO SITE CLEARING AND GRADING(IF APPLICABLE).

8. RIPRAP SHALL BE NATURAL STONE, SOLID PRECAST CONCRETE BLOCKS MADE FROM GRADE P2 CONCRETE, OR SOUND PIECES OF BROKEN CONCRETE, FREE FROM STRUCTURAL DEFECTS. PLAIN RIPRAP SHALL CONSIST OF INDIVIDUAL STONES OR PIECES OF BROKEN CONCRETE HAVING A LEAST DIMENSION OF 8 INCHES. SMALLER PIECES MAY BE USED TO FILL SPACES FOR BETTER PROTECTION OF THE SLOPE.

9. WRAP ALL GRATES IN GEOTEXTILE FABRIC. PLACE PEASTONE FILTER MATERIAL OVER STRUCTURES.

10. CONTRACTOR IS RESPONSIBLE FOR MAINTENANCE/CLEARING OF CONSTRUCTION WASTE ON SITE.

11. CONSTRACTOR RESPONSIBLE FOR REVIEWING THE GEOTECHNICAL REPORT PRIOR TO CONSTRUCTION.

12. ALL SE/SC MEASURES TO BE BUILT PER MDEQ BMP MEASURES.

13. SE/SC MEASURES TO BE MAINTAINED & PROPERLY STAGED THROUGHOUT PROJECT.

14. CONTRACTOR SHALL COORDINATE WEEKLY INSPECTIONS AND REPORT ON ALL EROSION CONTROL MEASURES OR AFTER A RAIN EVENT OF 1/2" OR MORE. REPORTS TO BE KEPT IN FIELD OFFICE.

GENERAL SE/SC NOTATIONS

14	15	16
36		

NOTE: ALL PRIVATE STREETS WILL FUNCTION AS A SE/SC MEASURE.

NOTE: ALL IN STREET CATCH BASIN WILL BE FITTED WITH SILT FABRIC AND SILT TRAP.

INEXPENSIVE AND VERY EFFECTIVE

5	SEEDING & MULCHING BLANKET	STABILIZES SOIL, THUS MINIMIZING EROSION PERMITS RUNOFF TO INFILTRATE SOIL, REDUCING RUNOFF VOLUME SHOULD INCLUDE PREPARED TOPSOIL BED *FOLLOW SESC NOTE NUMBER 6
9	VEGETATIVE BUFFER STRIP	SLOWS RUNOFF VELOCITY FILTERS SEDIMENT FROM RUNOFF REDUCES VOLUME OF RUNOFF ON SLOPES
13	RIPRAP, RUBBLE, GABIONS	USED WHERE VEGETATION IS NOT EASILY ESTABLISHED EFFECTIVE FOR HIGH VELOCITIES OR HIGH CONCENTRATIONS PERMITS RUNOFF TO INFILTRATE SOIL DISSIPATES ENERGY FLOW AT SYSTEM OUTLETS
14	AGGREGATE COVER	STABILIZES SOIL SURFACE, THUS MINIMIZING EROSION PERMITS CONSTRUCTION TRAFFIC IN ADVERSE WEATHER MAY BE USED AS PART OF PERMANENT BASE CONSTRUCTION OF PAVED AREAS
15	PAVING	PROTECTS AREAS WHICH CANNOT OTHERWISE BE PROTECTED, BUT INCREASES RUNOFF VOLUME AND VELOCITY IRREGULAR SURFACE WILL HELP SLOW VELOCITY
16	CURB & GUTTER	KEEPS HIGH VELOCITY RUNOFF ON PAVED AREAS FROM LEAVING PAVED SURFACES COLLECTS AND CONDUCTS RUNOFF TO ENCLOSED DRAINAGE SYSTEM OR PREPARED DRAINAGEWAY
17	BENCHES	REDUCES RUNOFF VELOCITY BY REDUCING EFFECTIVE SLOPE LENGTH COLLECTS SEDIMENT PROVIDES ACCESS TO SLOPES FOR SEEDING, MULCHING AND MAINTENANCE
36	CATCH BASIN, DRAIN INLET	COLLECTS HIGH VELOCITY CONCENTRATION RUNOFF MAY USE FILTER CLOTH OVER INLET
49	CHECK DAMS	REDUCES FLOW VELOCITY CATCHES SEDIMENT CAN BE CONSTRUCTED OF LOGS, STRAW, HAY, ROCK, LUMBER, LUMBER, MASONRY, OR SAND BAGS
57		USES GEOTEXTILE FABRIC AND POSTS OR POLES. EASY TO CONSTRUCT AND LOCATE AS NECESSARY.

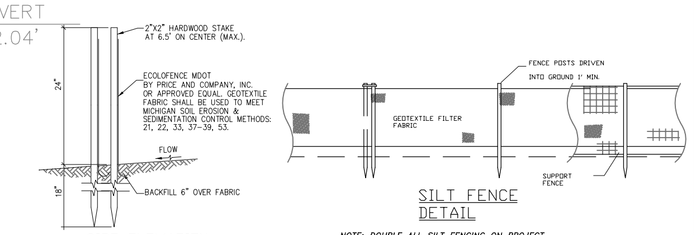

SILT FENCE DETAIL

NOTE: DOUBLE ALL SILT FENCING ON PROJECT.

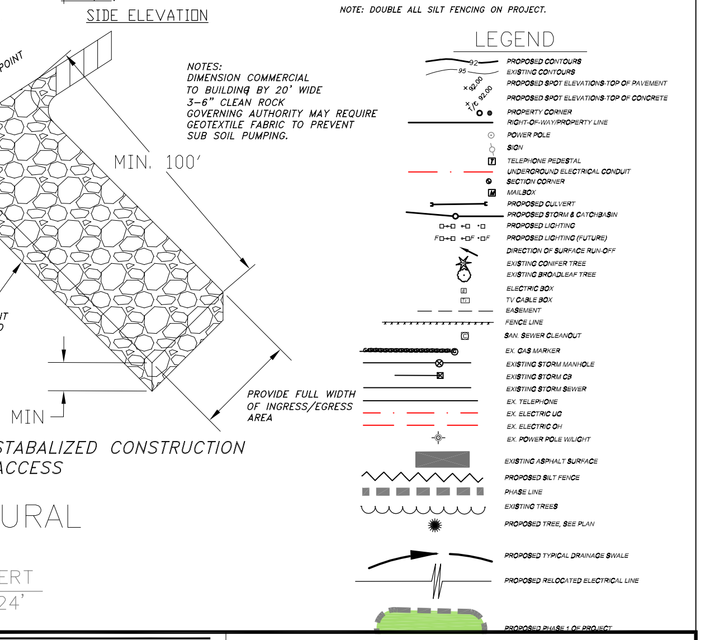

NOTES:
DIMENSION COMMERCIAL TO BUILDING BY 20' WIDE 3-6" CLEAN ROCK GOVERNING AUTHORITY MAY REQUIRE GEOTEXTILE FABRIC TO PREVENT SUB SOIL PUMPING.

MCE
MIDWEST CIVIL ENGINEERS, INC.
CIVIL ENGINEERING • LAND SURVEYING • ARCHITECTURE
13560 76TH STREET
SOUTH HAVEN, MI 49090
PH: 269-637-9205
FX: 269-637-9206

SOUTH HAVEN AREA RECREATIONAL PARK GRADING PLAN

CASCO TOWNSHIP
ALLEGAN COUNTY

SHEET	OF	PROJECT NO.
3	21 SHEETS	11-041

SCALE:	DRAWN	
1" = 100'	07/2011	MD

REVISIONS: CHANGED BERM DETAIL & PHASE 1 LIMITS, 09/20/11
11/19/13 CHANGED PHASE 1 LIMITS

LEGEND

- PROPOSED CONTOURS
- EXISTING CONTOURS
- PROPOSED SPOT ELEVATIONS-TOP OF PAVEMENT
- PROPOSED SPOT ELEVATIONS-TOP OF CONCRETE
- PROPERTY CORNER
- RIGHT-OF-WAY/PROPERTY LINE
- POWER POLE
- SIGN
- TELEPHONE PEDESTAL
- UNDERGROUND ELECTRICAL CONDUIT
- SECTION CORNER
- MAILBOX
- PROPOSED CULVERT
- PROPOSED STORM & CATCHBASIN
- PROPOSED LIGHTING
- PROPOSED LIGHTING (FUTURE)
- DIRECTION OF SURFACE RUN-OFF
- EXISTING CONIFER TREE
- EXISTING BROADLEAF TREE
- ELECTRIC BOX
- TV CABLE BOX
- EASEMENT
- FENCE LINE
- SAN. SEWER CLEANOUT
- EX. GAS MARKER
- EXISTING STORM MANHOLE
- EXISTING STORM CB
- EXISTING STORM SEWER
- EX. TELEPHONE
- EX. ELECTRIC UG
- EX. ELECTRIC OH
- EX. POWER POLE W/LIGHT
- EXISTING ASPHALT SURFACE
- PROPOSED SILT FENCE
- PHASE LINE
- EXISTING TREES
- PROPOSED TREE, SEE PLAN
- PROPOSED TYPICAL DRAINAGE SWALE
- PROPOSED RELOCATED ELECTRICAL LINE
- PROPOSED PHASE 1 OF PROJECT

NOTES:
ALL UNDERGROUND UTILITIES TO BE FIELD VERIFIED.

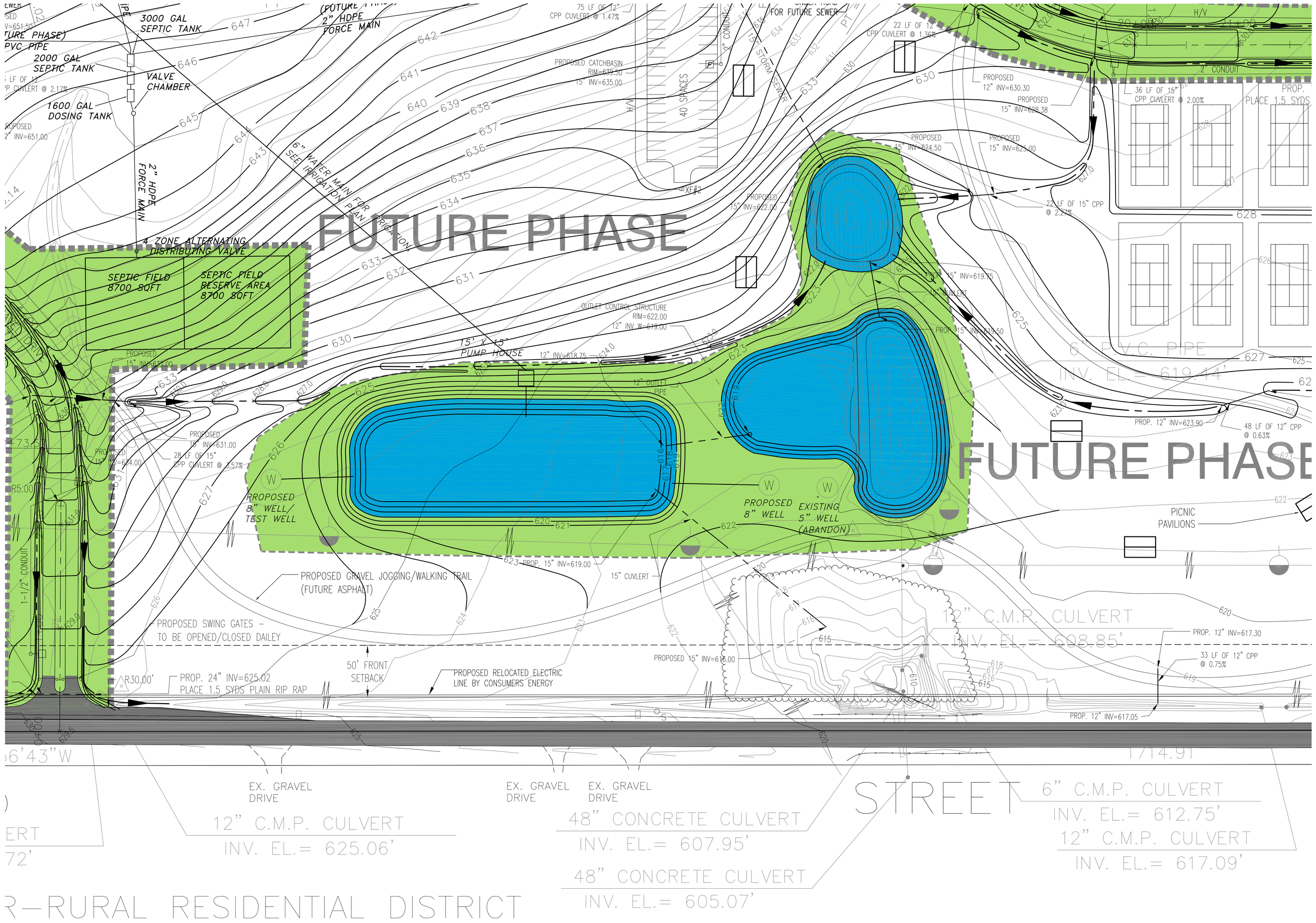

MCE

MIDWEST CIVIL ENGINEERS, INC.
CIVIL ENGINEERING + LAND SURVEYING + ARCHITECTURE
13560 76TH STREET
SOUTH HAVEN, MI 49090
PH: 269-637-9205
FX: 269-637-9206

SOUTH HAVEN AREA RECREATIONAL PARK
POND DETAIL #1

CASCO TOWNSHIP
ALLEGAN COUNTY

SHEET	OF	PROJECT NO.
4	21 SHEETS	11-041

SCALE:	DRAWN	
1" = 50'	04/2011	MD

REVISIONS: REVISIONS PER CASCO PLANNING COMMISSION, 08/03/11
CHANGED BERM DETAIL & PHASE 1 LIMITS, 09/20/11
11/19/13 CHANGED PHASE 1 LIMITS

LEGEND

- PROPOSED CONTOURS
- EXISTING CONTOURS
- PROPOSED SPOT ELEVATIONS-TOP OF PAVEMENT
- PROPOSED SPOT ELEVATIONS-TOP OF CONCRETE
- PROPERTY CORNER
- RIGHT-OF-WAY/PROPERTY LINE
- POWER POLE
- SIGN
- TELEPHONE PEDESTAL
- UNDERGROUND ELECTRICAL CONDUIT
- SECTION CORNER
- MAILBOX
- PROPOSED CULVERT
- PROPOSED STORM & CATCHBASIN
- PROPOSED LIGHTING
- PROPOSED LIGHTING (FUTURE)
- DIRECTION OF SURFACE RUN-OFF
- EXISTING CONIFER TREE
- EXISTING BROADLEAF TREE
- ELECTRIC BOX
- TV CABLE BOX
- EASEMENT
- FENCE LINE
- SAN. SEWER CLEANOUT
- EX. GAS MARKER
- EXISTING STORM MANHOLE
- EXISTING STORM CB
- EXISTING STORM SEWER
- EX. TELEPHONE
- EX. ELECTRIC UG
- EX. ELECTRIC OH
- EX. POWER POLE W/LIGHT
- EXISTING ASPHALT SURFACE
- PROPOSED SILT FENCE
- PHASE LINE
- EXISTING TREES
- PROPOSED TREE, SEE PLAN
- PROPOSED TYPICAL DRAINAGE SWALE
- PROPOSED RELOCATED ELECTRICAL LINE
- PROPOSED PHASE 1 OF PROJECT

NOTES:
ALL UNDERGROUND UTILITIES TO BE FIELD VERIFIED.

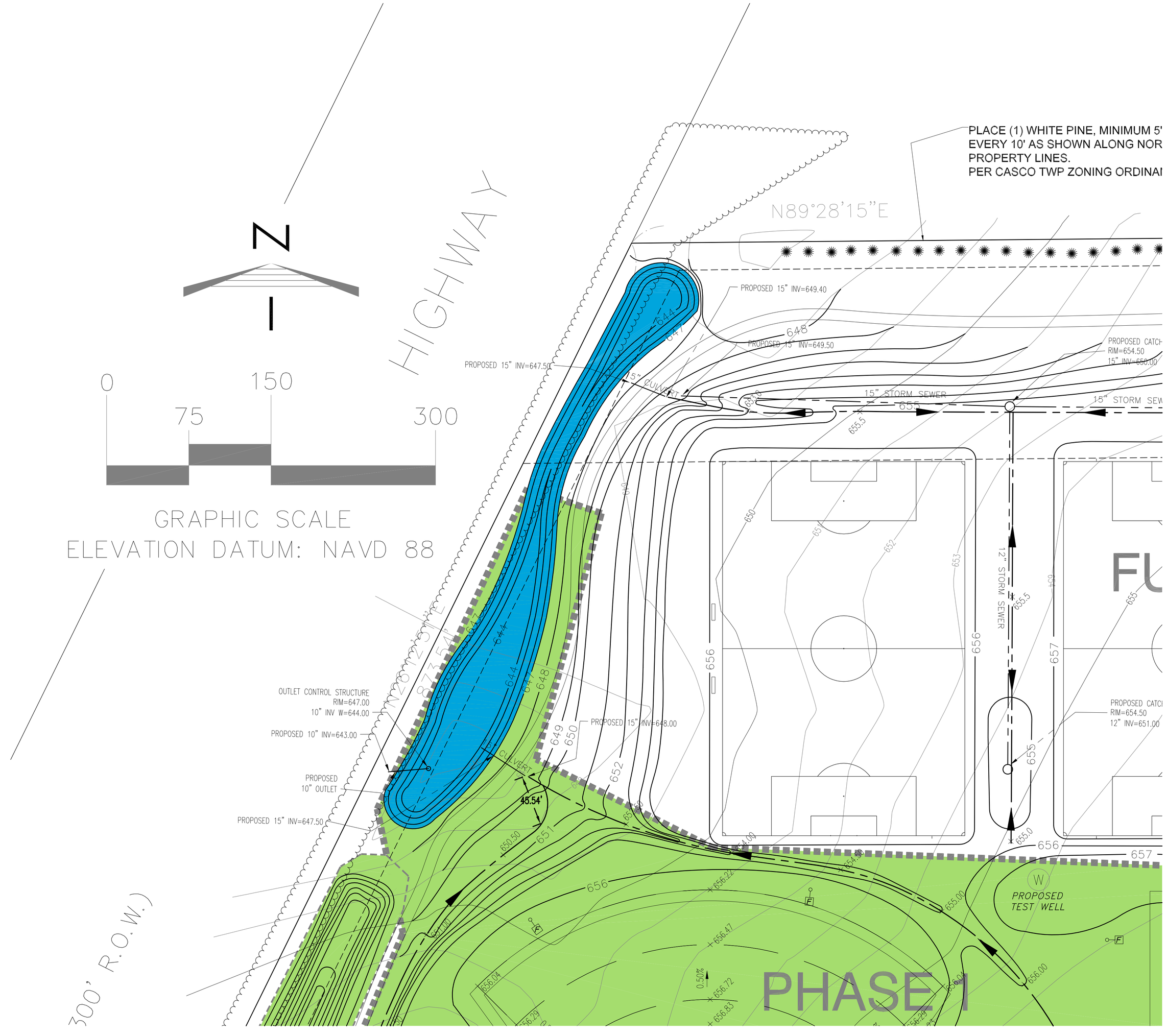

MCE MIDWEST CIVIL ENGINEERS, INC. CIVIL ENGINEERING • LAND SURVEYING • ARCHITECTURE 13560 76TH STREET SOUTH HAVEN, MI 49090 PH: 269-637-9205 FX: 269-637-9206	SOUTH HAVEN AREA RECREATIONAL PARK POND DETAIL #2
	CASCO TOWNSHIP ALLEGAN COUNTY
SCALE: 1" = 50' DRAWN: 04/2011 MD	SHEET 5 OF 21 SHEETS PROJECT NO. 11-041
	REVISIONS-REVISIONS PER CASCO PLANNING COMMISSION, 08/03/11
	CHANGED BERM DETAIL & PHASE 1 LIMITS, 09/20/11
	11/19/13 CHANGED PHASE 1 LIMITS

N

0 75 150 300

GRAPHIC SCALE
ELEVATION DATUM: NAVD 88

FUTURE PHASE

PHASE I

PHASE I

PHASE I

FUTURE PHASE

FUTURE PHASE

R-RURAL RESIDENTIAL DISTRICT

AG-AGR

71ST STREET

103RD STREET

(300' R.O.W.)

(66' R.O.W.)

PLACE (1) WHITE PINE, MINIMUM 5' HEIGHT, EVERY 10' AS SHOWN ALONG NORTH AND EAST PROPERTY LINE AND LOCATED ON A 8' TALL BERM PER CASCO TWP ZONING ORDINANCE SECTION 3.33 B.

PLACE (1) WHITE PINE, MINIMUM 5' HEIGHT, EVERY 10' AS SHOWN ALONG SOUTH AND WEST PROPERTY LINE AND LOCATED ON A 8' TALL BERM PER CASCO TWP ZONING ORDINANCE SECTION 3.33 B.

LEGEND

ARSENIC AREA TO BE REMOVED - APPROXIMATELY 18" DEPTH

PROPOSED PHASE 1 OF PROJECT

ARSENIC AREAS/VOLUMES

AREA 1 - 62,132 SFT (1.43 ACRES)
AREA 2 - 88,534 SFT (2.03 ACRES)
AREA 3 - 311,204 SFT (7.14 ACRES)
AREA 4 - 106,278 SFT (2.44 ACRES)

TOTAL VOLUME TO REMOVE/BERM - 27,800 CYDS

NOTES:
PLACE CLEAN FILL FROM ONSITE TO FILL ARSENIC REMOVAL AREAS WHICH DO NOT FALL WITHIN AREAS TO BE CONSTRUCTED IN PHASE I.

ALL ARSENIC ONSITE TO BE PLACED IN BERMS DURING PHASE I.

ALL BERMS TO BE CONSTRUCTED IN PHASE I.

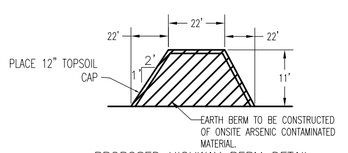

PROPOSED HIGHWAY BERM DETAIL
(not to scale)

NOTES:
-TOTAL LENGTH OF BERM = 1,025 FT

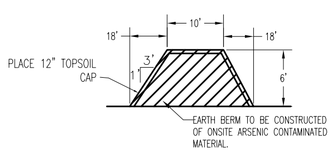

PROPOSED RESIDENTIAL BERM DETAIL
(not to scale)

NOTES:
-TOTAL LENGTH OF BERM = 1,665 FT

MCE

MIDWEST CIVIL ENGINEERS, INC.
CIVIL ENGINEERING + LAND SURVEYING + ARCHITECTURE
13560 76TH STREET
SOUTH HAVEN, MI 49090
PH: 269-637-9205
FX: 269-637-9206

SOUTH HAVEN AREA RECREATIONAL PARK
ARSENIC REMOVAL PLAN

CASCO TOWNSHIP
ALLEGAN COUNTY

SHEET	OF	PROJECT NO.
6	21 SHEETS	11-055

SCALE	DRAWN	
1" = 100'	05/2011	MD

REVISIONS: 11/19/13 CHANGED PHASE 1 LIMITS

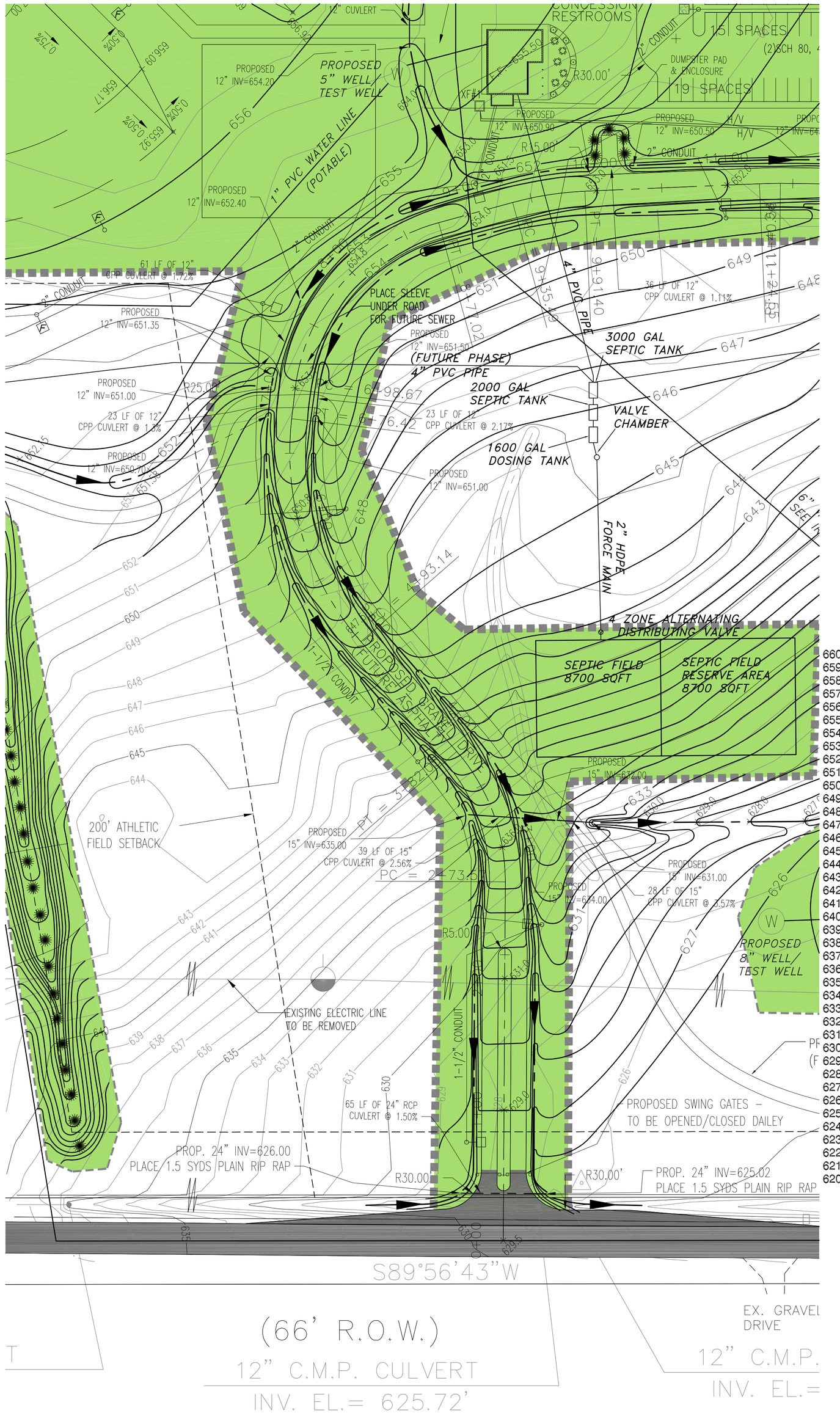

N

0 25 50 100 150

SCALE: 1"=50'

LEGEND

- PROPOSED CONTOURS
- EXISTING CONTOURS
- PROPOSED SPOT ELEVATIONS-TOP OF PAVEMENT
- PROPOSED SPOT ELEVATIONS-TOP OF CONCRETE
- PROPERTY CORNER
- RIGHT-OF-WAY/PROPERTY LINE
- POWER POLE
- SIGN
- TELEPHONE PEDESTAL
- UNDERGROUND ELECTRICAL CONDUIT
- SECTION CORNER
- MAILBOX
- PROPOSED CULVERT
- PROPOSED STORM & CATCHBASIN
- PROPOSED LIGHTING
- PROPOSED LIGHTING (FUTURE)
- DIRECTION OF SURFACE RUN-OFF
- EXISTING CONIFER TREE
- EXISTING BROADLEAF TREE
- ELECTRIC BOX
- TV CABLE BOX
- EASEMENT
- FENCE LINE
- SAN. SEWER CLEANOUT
- EX. GAS MARKER
- EXISTING STORM MANHOLE
- EXISTING STORM CB
- EXISTING STORM SEWER
- EX. TELEPHONE
- EX. ELECTRIC UG
- EX. ELECTRIC OH
- EX. POWER POLE W/LIGHT
- EXISTING ASPHALT SURFACE
- PROPOSED SILT FENCE
- PHASE LINE
- EXISTING TREES
- PROPOSED TREE, SEE PLAN
- PROPOSED TYPICAL DRAINAGE SWALE
- PROPOSED RELOCATED ELECTRICAL LINE
- PROPOSED PHASE 1 OF PROJECT

NOTES:
ALL UNDERGROUND UTILITIES TO BE FIELD VERIFIED.

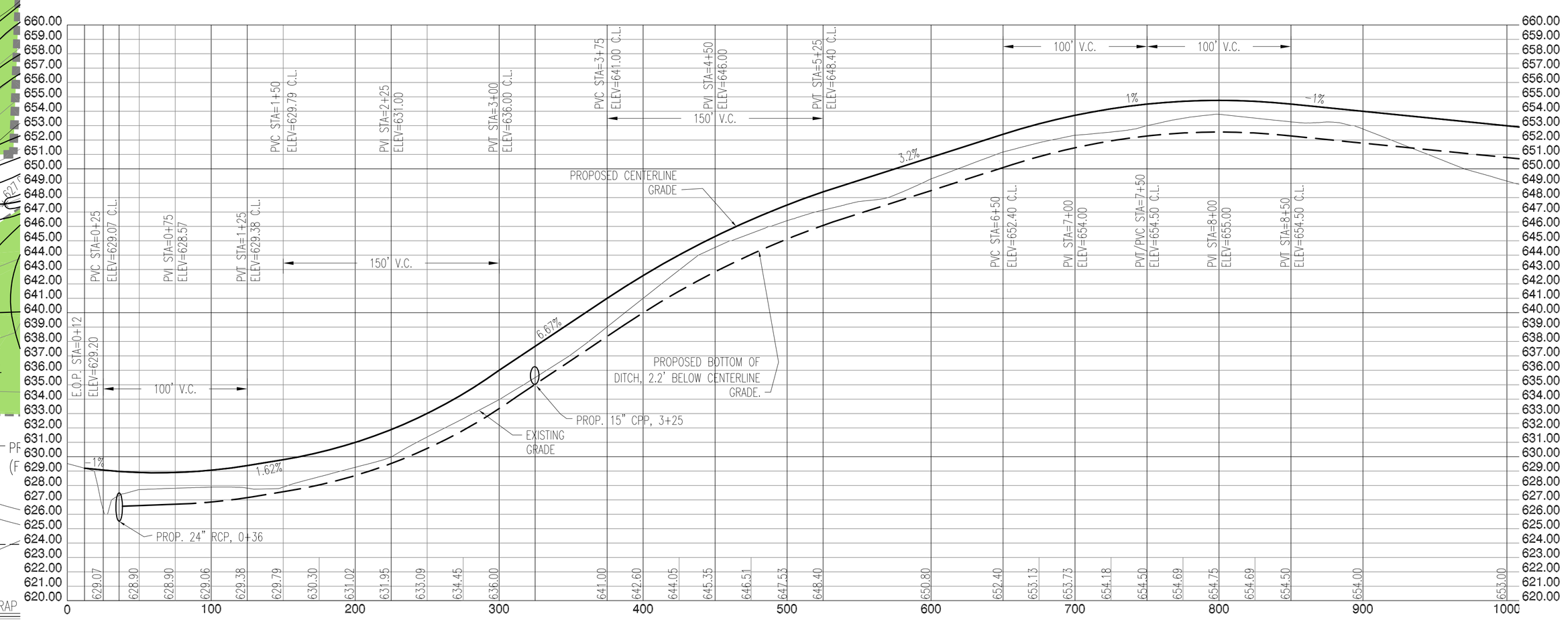

MCE
MIDWEST CIVIL ENGINEERS, INC.
CIVIL ENGINEERING • LAND SURVEYING • ARCHITECTURE
13560 76TH STREET
SOUTH HAVEN, MI 49090
PH: 269-637-9205
FX: 269-637-9206

SOUTH HAVEN AREA RECREATIONAL PARK
ROAD - PLAN & PROFILE

CASCO TOWNSHIP
ALLEGAN COUNTY

SCALE: 1" = 50'	DRAWN 04/2011 MD	SHEET 7 OF 21 SHEETS	PROJECT NO. 11-041

REVISIONS-REVISIONS PER CASCO PLANNING COMMISSION, 08/03/11
CHANGED BERM DETAIL & PHASE I LIMITS, 09/20/11
11/19/13 CHANGED PHASE I LIMITS

MCE
MIDWEST CIVIL ENGINEERS, INC.
CIVIL ENGINEERING • LAND SURVEYING • ARCHITECTURE
13560 76TH STREET
SOUTH HAVEN, MI 49090
PH: 269-637-9205
FX: 269-637-9206

SOUTH HAVEN AREA RECREATIONAL PARK
ROAD - PLAN & PROFILE

CASCO TOWNSHIP
ALLEGAN COUNTY

SHEET 8 OF 21 SHEETS
PROJECT NO. 11-041

SCALE: 1" = 50'
DRAWN: 04/2011 MD

REVISIONS: REVISIONS PER CASCO PLANNING COMMISSION, 08/03/11
CHANGED BERM DETAIL & PHASE 1 LIMITS, 09/20/11
11/19/13 CHANGED PHASE 1 LIMITS

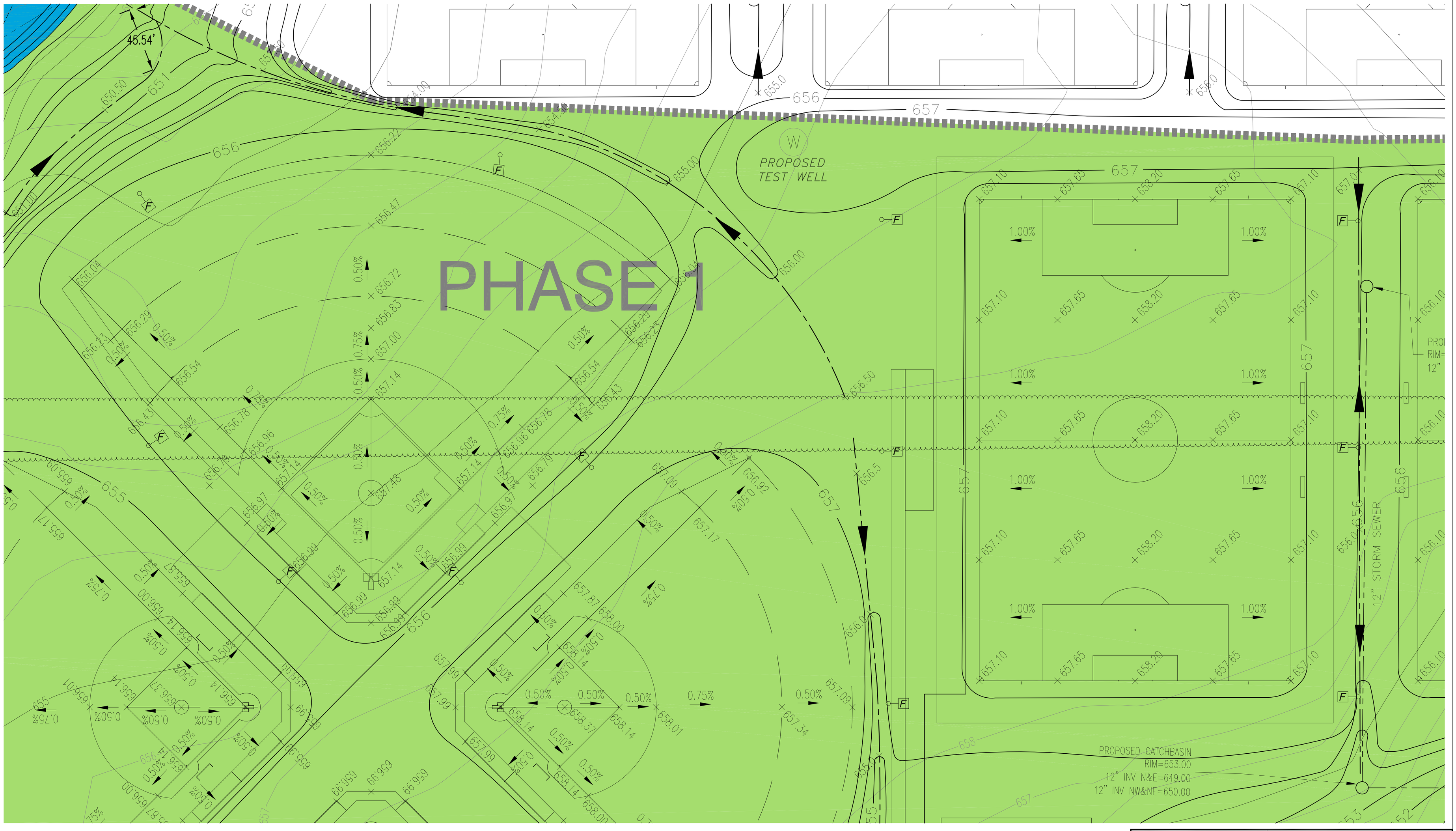

MCE

MIDWEST CIVIL ENGINEERS, INC.
CIVIL ENGINEERING • LAND SURVEYING • ARCHITECTURE
13560 76TH STREET
SOUTH HAVEN, MI 49090
PH: 269-637-9205
FX: 269-637-9206

SOUTH HAVEN AREA RECREATIONAL PARK
GRADING PLAN - PLAYING FIELDS

CASCO TOWNSHIP
ALLEGAN COUNTY

SHEET	OF	PROJECT NO.
9	21 SHEETS	11-041

SCALE:	DRAWN	
1" = 30'	04/2011	MD

REVISIONS-REVISIONS PER CASCO PLANNING COMMISSION, 08/03/11
CHANGED BERM DETAIL & PHASE 1 LIMITS, 09/20/11
11/19/13 CHANGED PHASE 1 LIMITS

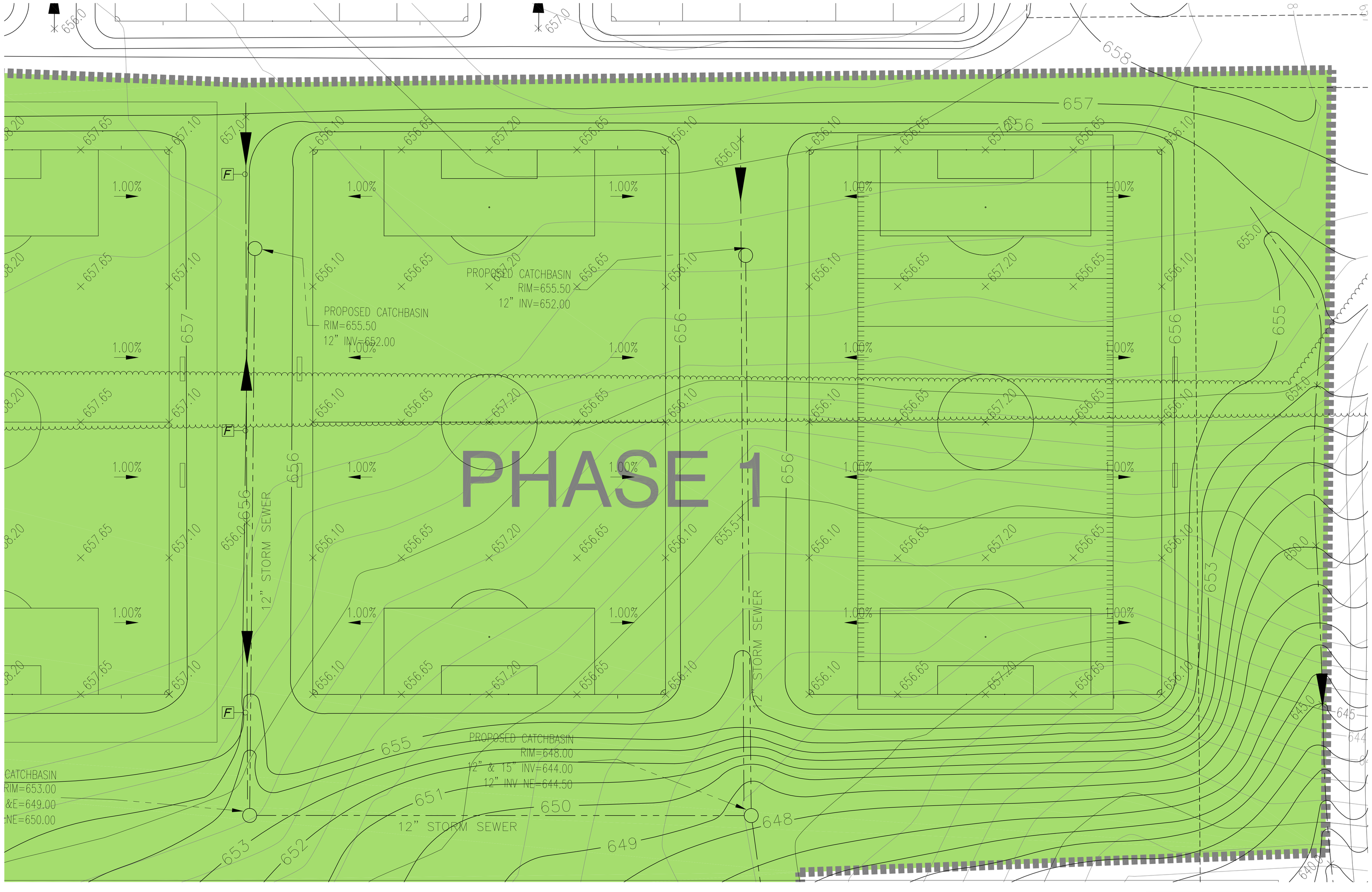

MCE

MIDWEST CIVIL ENGINEERS, INC.
CIVIL ENGINEERING • LAND SURVEYING • ARCHITECTURE
13560 76TH STREET
SOUTH HAVEN, MI 49090
PH: 269-637-9205
FX: 269-637-9206

SOUTH HAVEN AREA RECREATIONAL PARK
GRADING PLAN - PLAYING FIELDS

CASCO TOWNSHIP
ALLEGAN COUNTY

SHEET	OF	PROJECT NO.
10	21 SHEETS	11-041

SCALE:	DRAWN	
1" = 30'	04/2011	MD

REVISIONS: REVISIONS PER CASCO PLANNING COMMISSION, 08/03/11
CHANGED BERM DETAIL & PHASE 1 LIMITS, 09/20/11
11/19/13 CHANGED PHASE 1 LIMITS

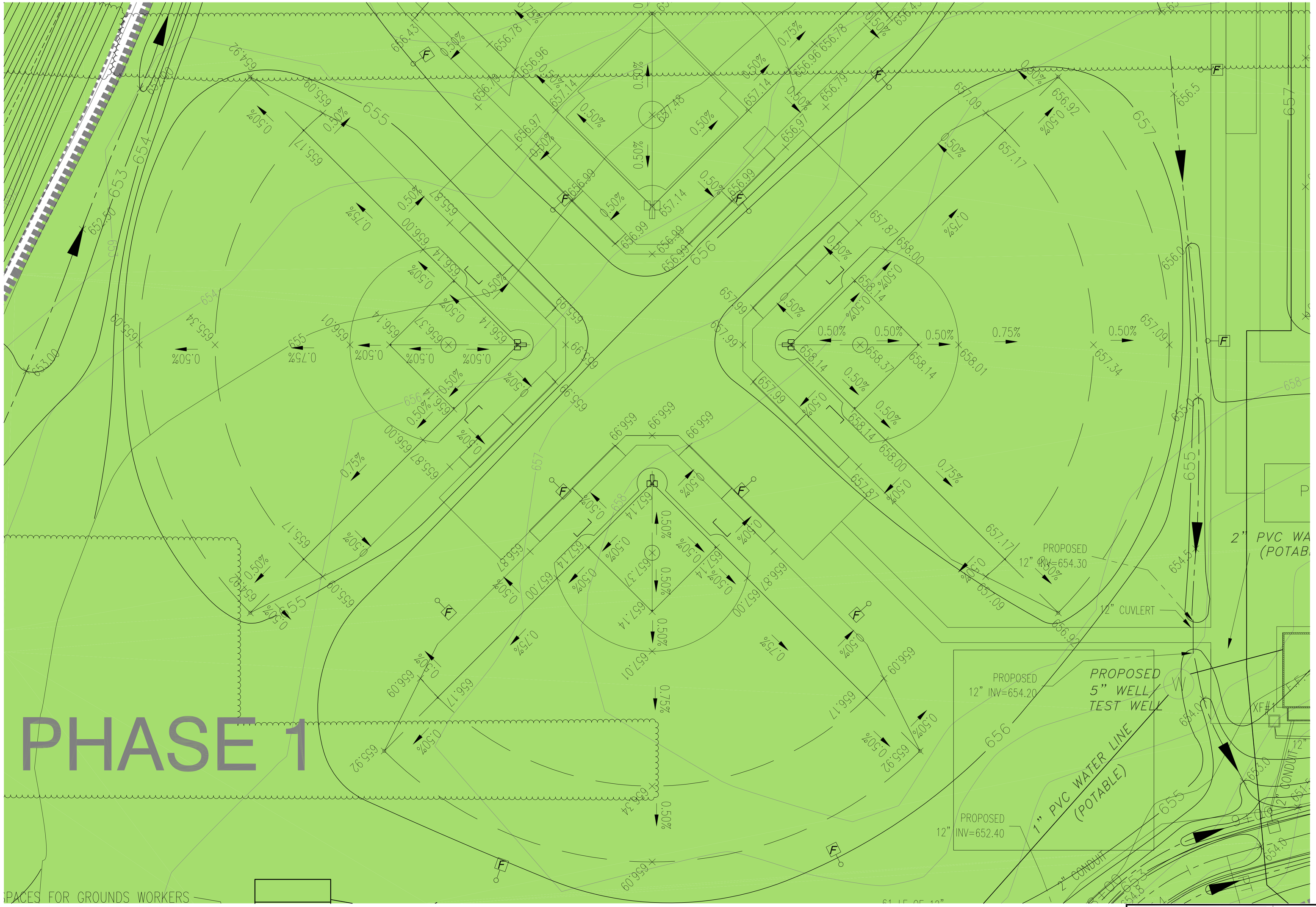

MCE

MIDWEST CIVIL ENGINEERS, INC.
CIVIL ENGINEERING • LAND SURVEYING • ARCHITECTURE
13560 76TH STREET
SOUTH HAVEN, MI 49090
PH: 269-637-9205
FX: 269-637-9206

SOUTH HAVEN AREA RECREATIONAL PARK
GRADING PLAN - PLAYING FIELDS

CASCO TOWNSHIP
ALLEGAN COUNTY

SCALE: 1" = 30'	DRAWN: 04/2011 MD	SHEET 11 OF 21 SHEETS	PROJECT NO. 11-041

REVISIONS-REVISIONS PER CASCO PLANNING COMMISSION, 08/03/11
CHANGED BERM DETAIL & PHASE 1 LIMITS, 09/20/11
11/19/13 CHANGED PHASE 1 LIMITS

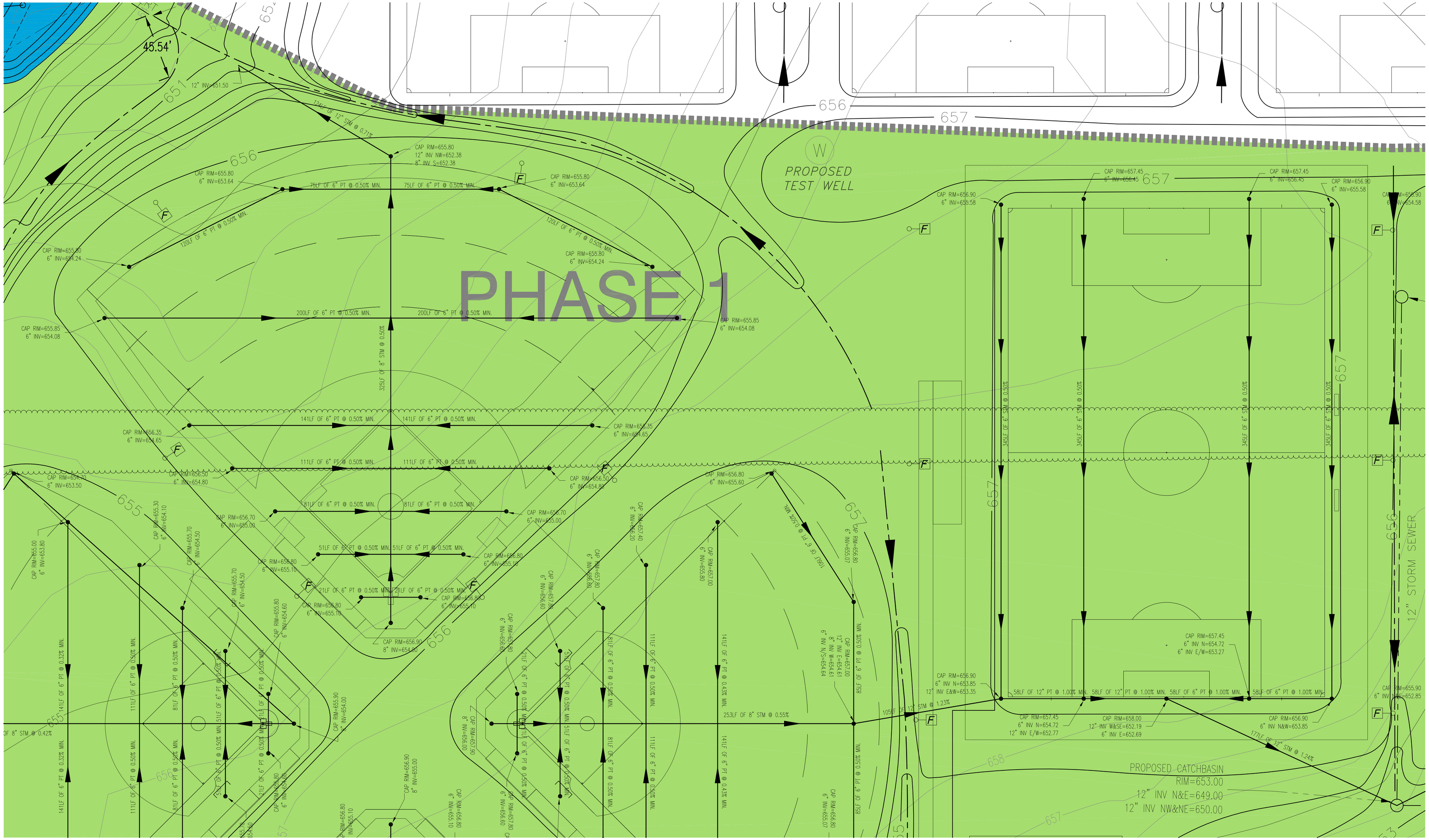

MCE

MIDWEST CIVIL ENGINEERS, INC.
CIVIL ENGINEERING + LAND SURVEYING + ARCHITECTURE
13560 76TH STREET
SOUTH HAVEN, MI 49090
PH: 269-637-9205
FX: 269-637-9206

SOUTH HAVEN AREA RECREATIONAL PARK
UNDERDRAIN PLAN - BASEBALL FIELD

CASCO TOWNSHIP
ALLEGAN COUNTY

SHEET	OF	PROJECT NO.
12	21 SHEETS	11-041

SCALE:	DRAWN:	
1" = 30'	04/2011	MD

REVISIONS/ REVISIONS PER CASCO PLANNING COMMISSION, 08/03/11
CHANGED BERM DETAIL & PHASE 1 LIMITS, 09/20/11
11/19/13 CHANGED PHASE 1 LIMITS

PHASE 1

PROPOSED CATCHBASIN
RIM=655.50
12" INV=652.00

PROPOSED CATCHBASIN
RIM=655.50
12" INV=652.00

PROPOSED CATCHBASIN
RIM=648.00
12" & 15" INV=644.00
12" INV NE=644.50

12" STORM SEWER

83 SPACES

LEGEND

- PROPOSED CONTOURS
- EXISTING CONTOURS
- PROPOSED SPOT ELEVATIONS-TOP OF PAVEMENT
- PROPOSED SPOT ELEVATIONS-TOP OF CONCRETE
- PROPERTY CORNER
- RIGHT-OF-WAY/PROPERTY LINE
- POWER POLE
- SIGN
- TELEPHONE PEDESTAL
- UNDERGROUND ELECTRICAL CONDUIT
- SECTION CORNER
- MAILBOX
- PROPOSED CULVERT
- PROPOSED STORM & CATCHBASIN
- PROPOSED LIGHTING
- PROPOSED LIGHTING (FUTURE)
- DIRECTION OF SURFACE RUN-OFF
- EXISTING CONIFER TREE
- EXISTING BROADLEAF TREE
- ELECTRIC BOX
- TV CABLE BOX
- EASEMENT
- FENCE LINE
- SAN. SEWER CLEANOUT
- EX. GAS MARKER
- EXISTING STORM MANHOLE
- EXISTING STORM CB
- EXISTING STORM SEWER
- EX. TELEPHONE
- EX. ELECTRIC UG
- EX. ELECTRIC OH
- EX. POWER POLE W/LIGHT
- EXISTING ASPHALT SURFACE
- PROPOSED SILT FENCE
- PHASE LINE
- EXISTING TREES
- PROPOSED TREE, SEE PLAN
- PROPOSED TYPICAL DRAINAGE SWALE
- PROPOSED RELOCATED ELECTRICAL LINE
- PROPOSED PHASE 1 OF PROJECT

NOTES:
ALL UNDERGROUND UTILITIES TO BE FIELD VERIFIED.

MCE
MIDWEST CIVIL ENGINEERS, INC.
CIVIL ENGINEERING • LAND SURVEYING • ARCHITECTURE
13560 76TH STREET
SOUTH HAVEN, MI 49090
PH: 269-637-9205
FX: 269-637-9206

SOUTH HAVEN AREA RECREATIONAL PARK
UNDERDRAIN PLAN - SOCCER FIELD

CASCO TOWNSHIP
ALLEGAN COUNTY

SCALE:	DRAWN	SHEET	OF	PROJECT NO.
1" = 30'	04/2011 MD	13	21 SHEETS	11-041

REVISIONS: 11/19/13 CHANGED PHASE 1 LIMITS

PHASE 1

PROPOSED 12" INV=654.30

PROPOSED 12" INV=654.20

PROPOSED 12" INV=652.40

PROPOSED 5" WELL TEST WELL

1" PVC WATER LINE (POTABLE)

2" PVC WATER (POTABLE)

12" CUVLERT

253LF OF 8" STM @ 0.55%

271LF OF 8" STM @ 0.42%

PLACE SLEEVE UNDER ROAD FOR FUTURE SEWER

(FUTURE PHASE) 4" PVC PIPE

2" CONDUIT

1-1/2" CONDUIT

15 SPACES

PROPOSED 12" INV=651.35

PROPOSED 12" INV=651.00

23 LF OF 12" CPP CUVLERT @ 1.3%

61 LF OF 12" CPP CUVLERT @ 1.72%

23 LF OF 12" CPP CUVLERT @ 2.17%

2000 GAL SEPTIC T

MCE

MIDWEST CIVIL ENGINEERS, INC.
CIVIL ENGINEERING • LAND SURVEYING • ARCHITECTURE
13560 ... STREET
SOUTH HAVEN, MI 49090
PH: 269-637-8205
FX:

SOUTH HAVEN AREA RECREATIONAL PARK
UNDERDRAIN PLAN - BASEBALL FIELD

CASCO TOWNSHIP
ALLEGAN COUNTY

SHEET	OF	PROJECT NO.
14	21 SHEETS	11-041

SCALE:	DATE	BY	REVISIONS
1" = 30'	04/2011	MD	REVISIONS: REVISIONS PER CASCO PLANNING COMMISSION. 08/03/11
			CHANGED BERM DETAIL & PHASE 1 LIMITS. 09/20/11
			11/19/13 CHANGED PHASE 1 LIMITS

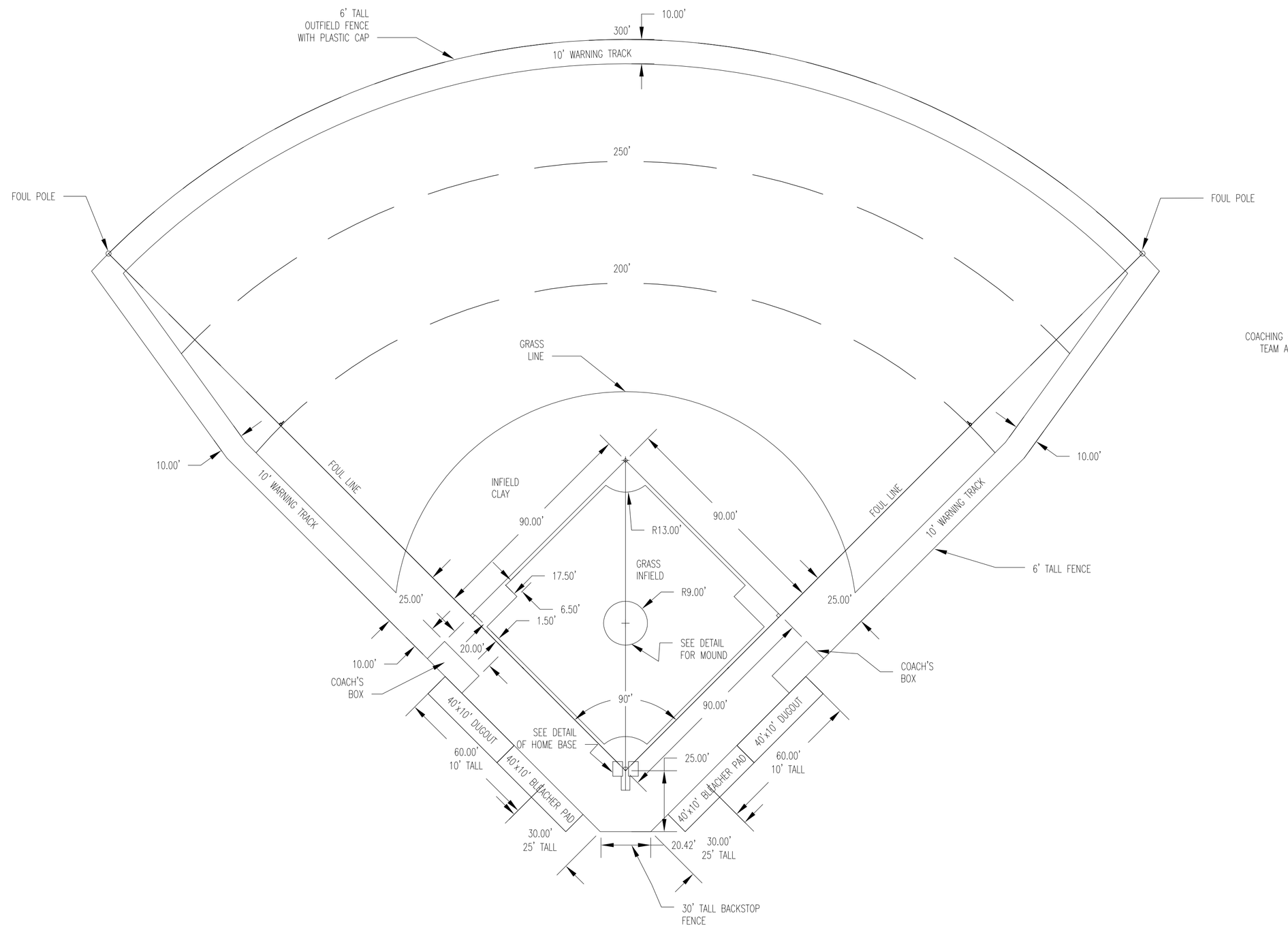

SOFTBALL FIELD LAYOUT

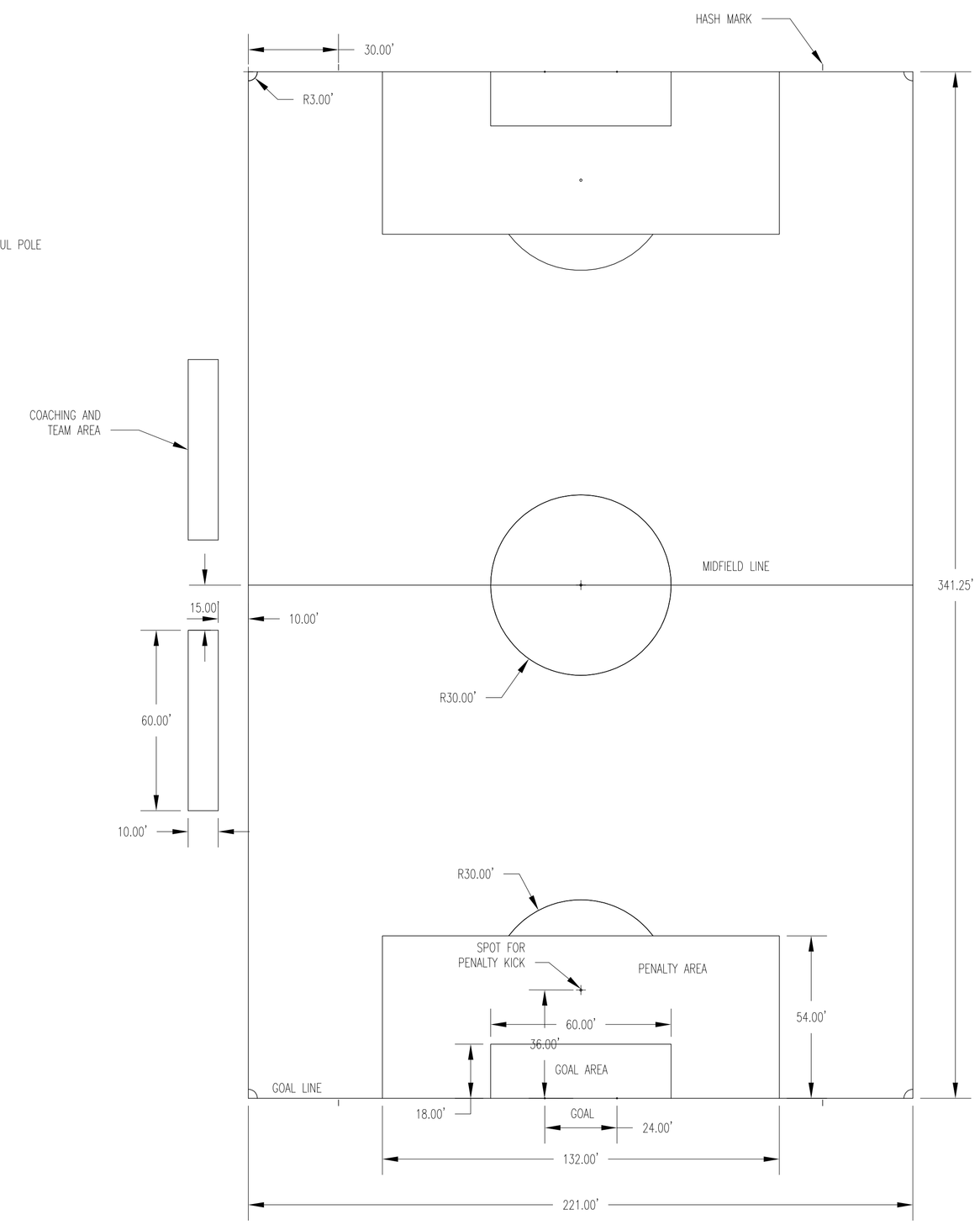

SOCCER FIELD LAYOUT

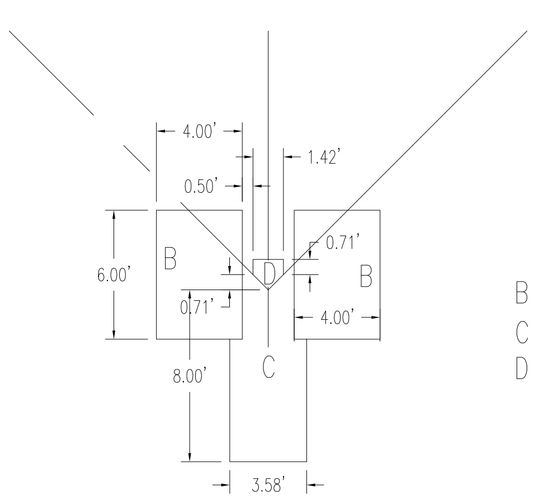

LAYOUT AT HOME BASE
SCALE: 1"=5'

LEGEND

B – BATTER'S BOX
C – CATHER'S BOX
D – HOME BASE

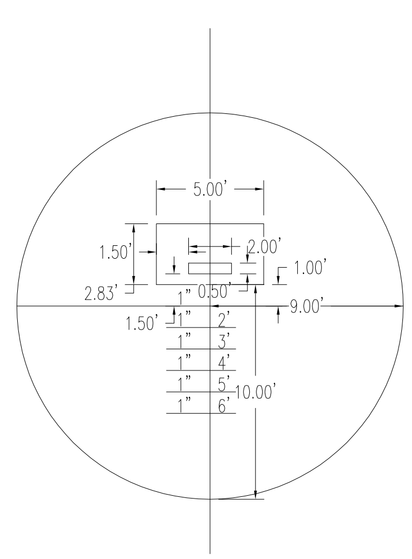

PITCHING MOUND
SCALE: 1"=5'

NOTES:
PITCHING MOUND IS A 18' DIAMETER CIRCLE, CENTER OF WHICH IS 59' FROM BACK OF HOME PLATE.

LOCATE FRONT EDGE OF RUBBER 18" BEHIND CENTER OF MOUND.

FRONT EDGE OF RUBBER TO BACK POINT OF HOME PLATE, 60'6".

SLOPE STARTS 6" FROM FRONT EDGE OF RUBBER.

THE DEGREE OF SLOPE FROM A STARTING POINT 6" IN FRONT OF THE PITCHER'S PLATE TO A POINT 6' TOWARD HOME PLATE SHALL BE 1" TO 1', AND SUCH DEGREE OF SLOPE SHALL BE UNIFORM.

LEVEL AREA SURROUNDING RUBBER SHOULD BE 6" IN FRONT OF RUBBER, 18" TO EACH SIDE AND 22" TO REAR OF RUBBER. TOTAL LEVEL AREA IS 5'x34".

MCE
MIDWEST CIVIL ENGINEERS, INC.
CIVIL ENGINEERING • LAND SURVEYING • ARCHITECTURE
13560 76TH STREET
SOUTH HAVEN, MI 49090
PH: 269-637-9205
FX: 269-637-9206

SOUTH HAVEN AREA RECREATIONAL PARK
BASEBALL AND SOCCER FIELD LAYOUT

CASCO TOWNSHIP
ALLEGAN COUNTY

SHEET 15 OF 21 SHEETS
PROJECT NO. 11-041
SCALE: 1" = 30'
DRAWN 02/2013 MD
REVISIONS: 11/19/13 CHANGED PHASE I LIMITS

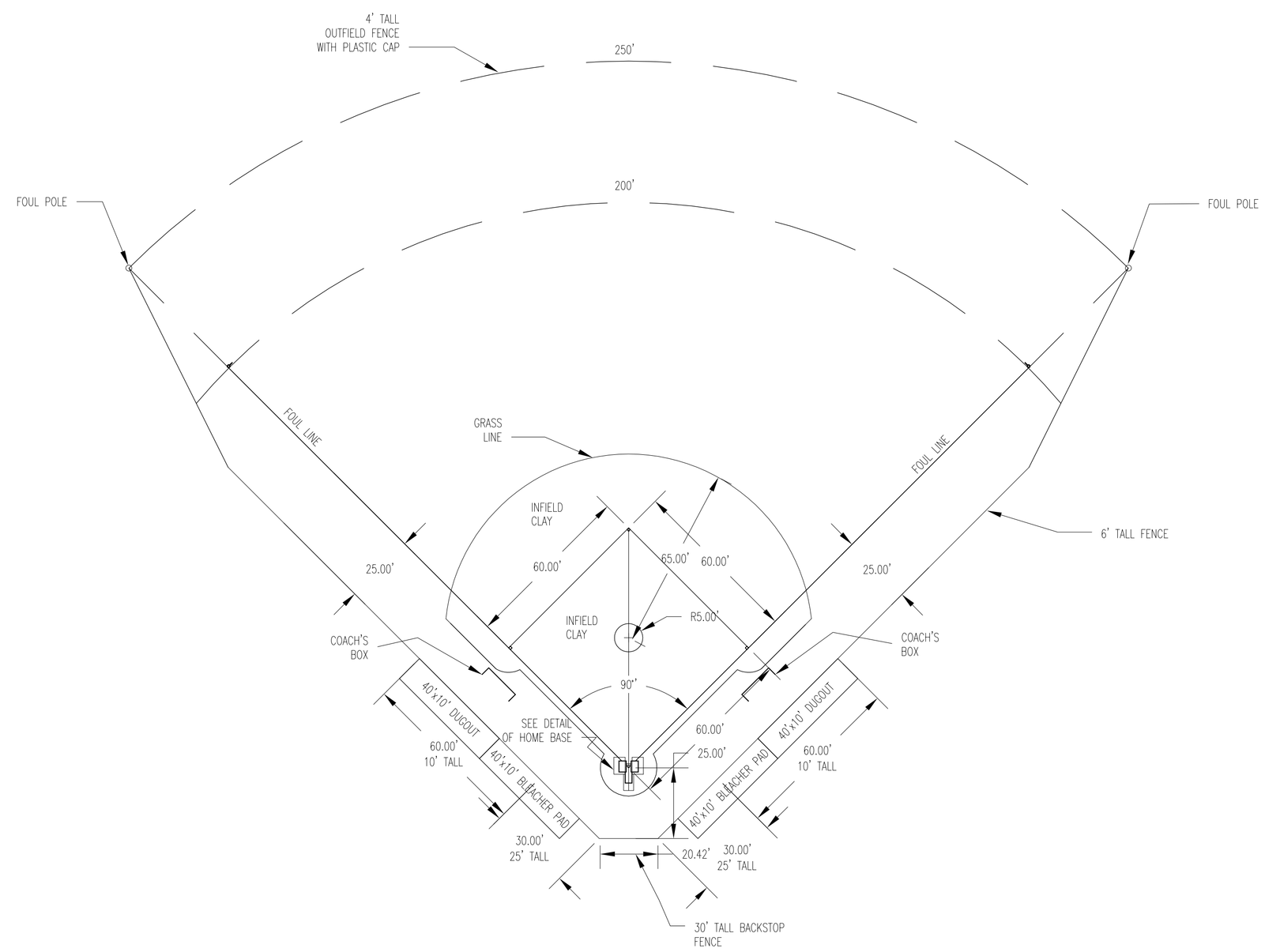

LITTLE LEAGUE BASEBALL FIELD LAYOUT

MCE
MIDWEST CIVIL ENGINEERS, INC.
CIVIL ENGINEERING • LAND SURVEYING • ARCHITECTURE
13560 76TH STREET
SOUTH HAVEN, MI 49090
PH: 269-637-9205
FX: 269-637-9206

SOUTH HAVEN AREA RECREATIONAL PARK
LITTLE LEAGUE BASEBALL FIELD LAYOUT

CASCO TOWNSHIP
ALLEGAN COUNTY

SHEET	OF SHEETS	PROJECT NO.
16	21	11-041

SCALE	DRAWN
1" = 30'	02/2013 MD

REVISIONS: 11/19/13 CHANGED PHASE 1 LIMITS

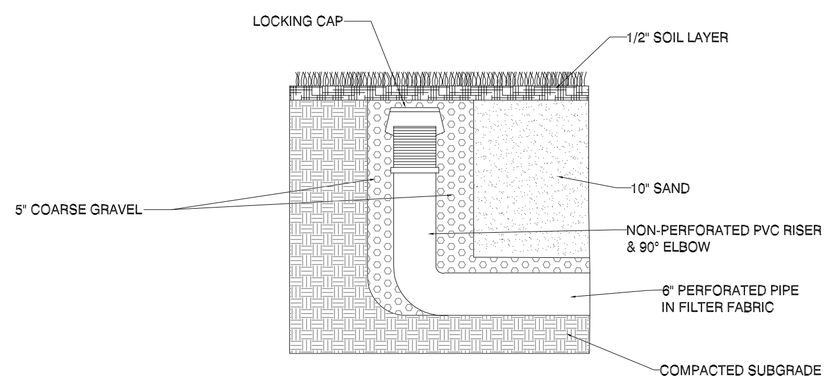

UNDERDRAIN CLEANOUT DETAIL - SOCCER FIELDS

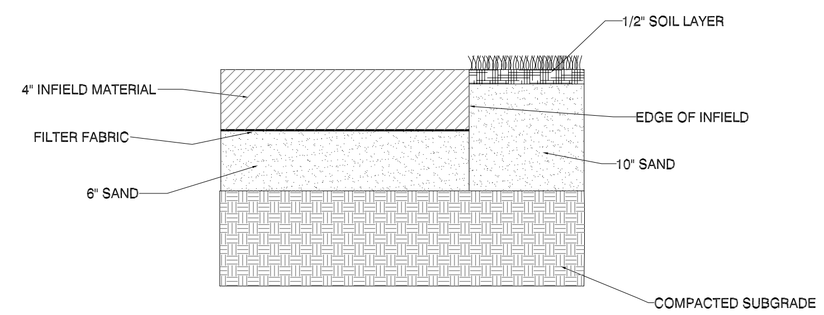

BASEBALL INFIELD AREA

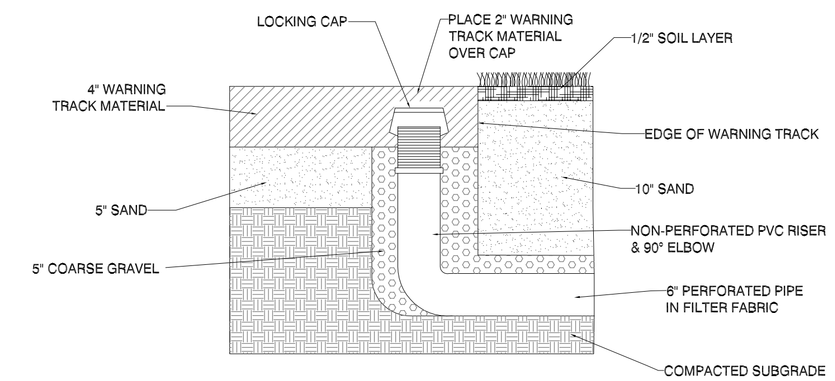

UNDERDRAIN CLEANOUT DETAIL - BASEBALL FIELDS

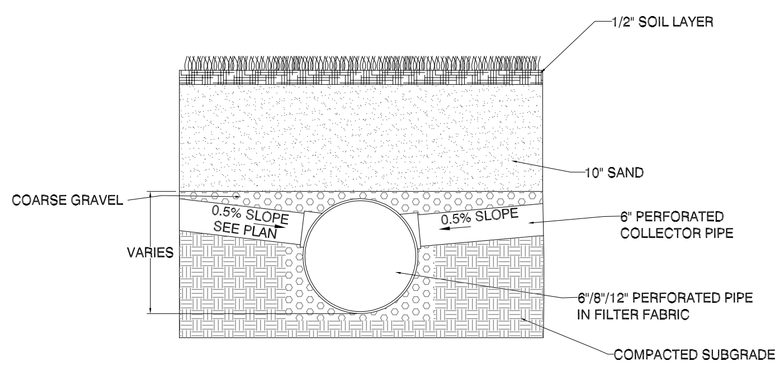

SUB-DRAIN TIE-IN TO STORM MAINS

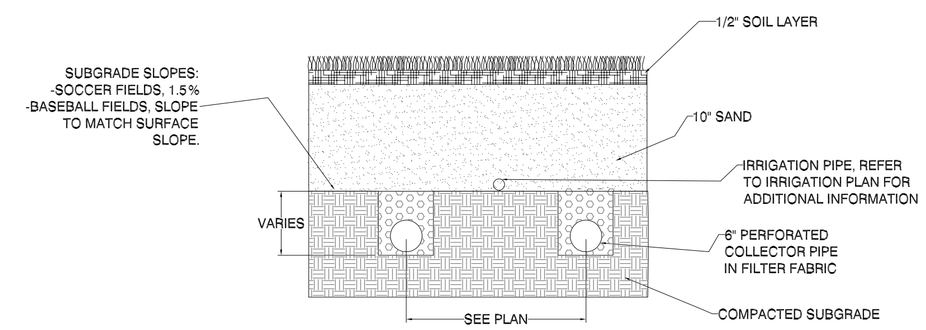

FIELD CROSS SECTION

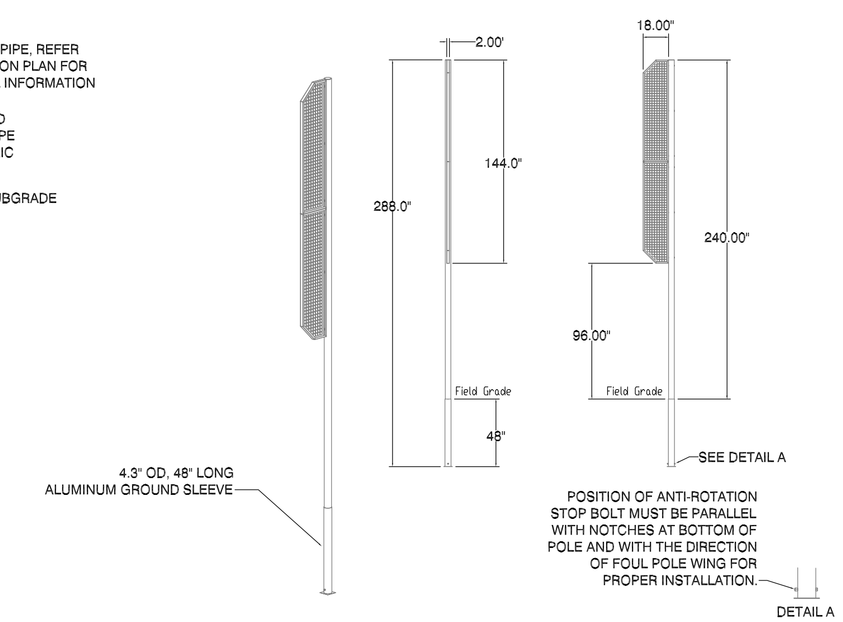

FOUL POLE WITH WING

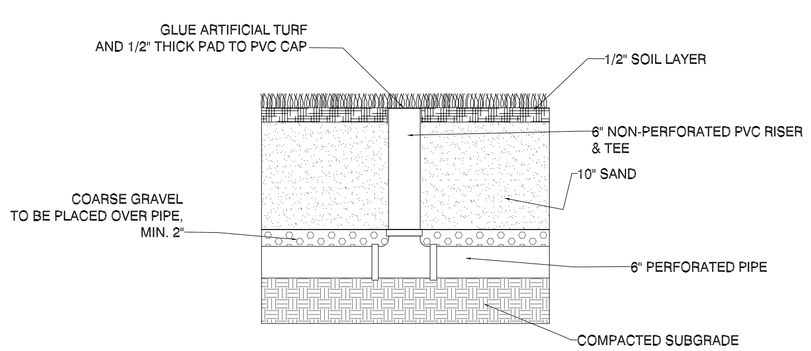

COLLECTOR PIPE CLEANOUT

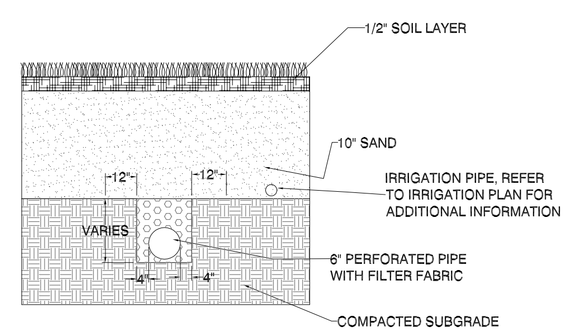

COLLECTOR PIPE DETAIL

MCE

MIDWEST CIVIL ENGINEERS, INC.
CIVIL ENGINEERING • LAND SURVEYING • ARCHITECTURE
13560 76TH STREET
SOUTH HAVEN, MI 49090
PH: 269-637-9205
FX: 269-637-9206

SOUTH HAVEN AREA RECREATIONAL PARK
TYPICAL FIELD DETAILS

CASCO TOWNSHIP
ALLEGAN COUNTY

SHEET 17 OF 21 SHEETS
PROJECT NO. 11-041

SCALE: NO SCALE
DRAWN: 02/2013 MD

REVISIONS: 11/19/13 CHANGED PHASE 1 LIMITS

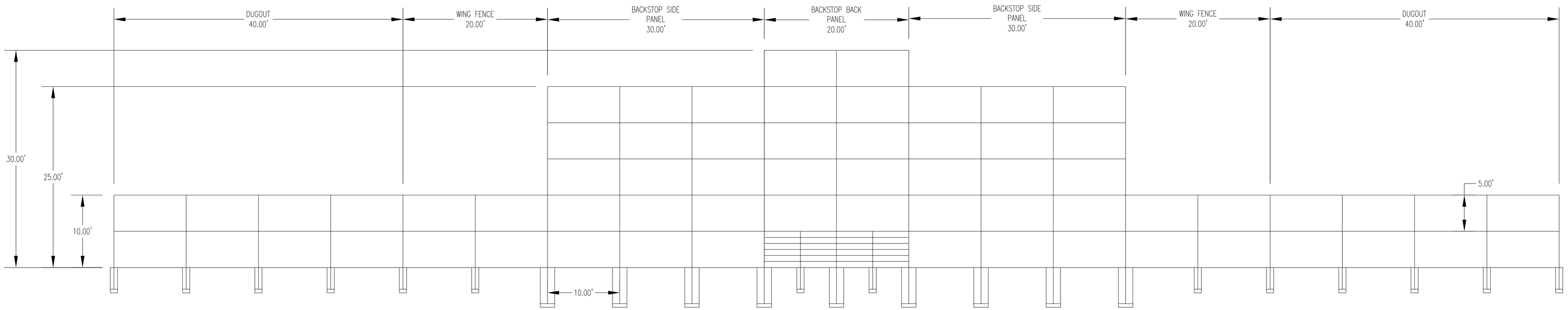

BACKSTOP ELEVATION

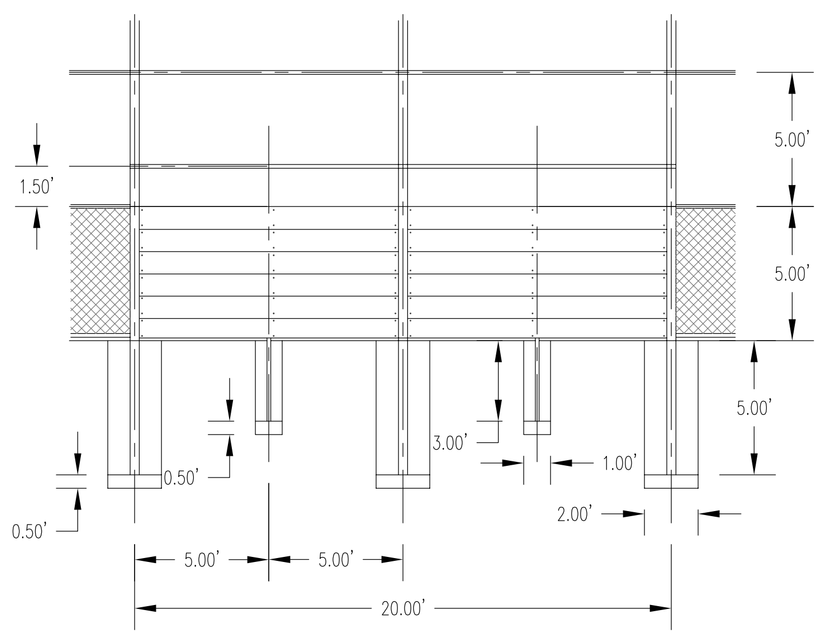

FRONT SIDE ELEVATION

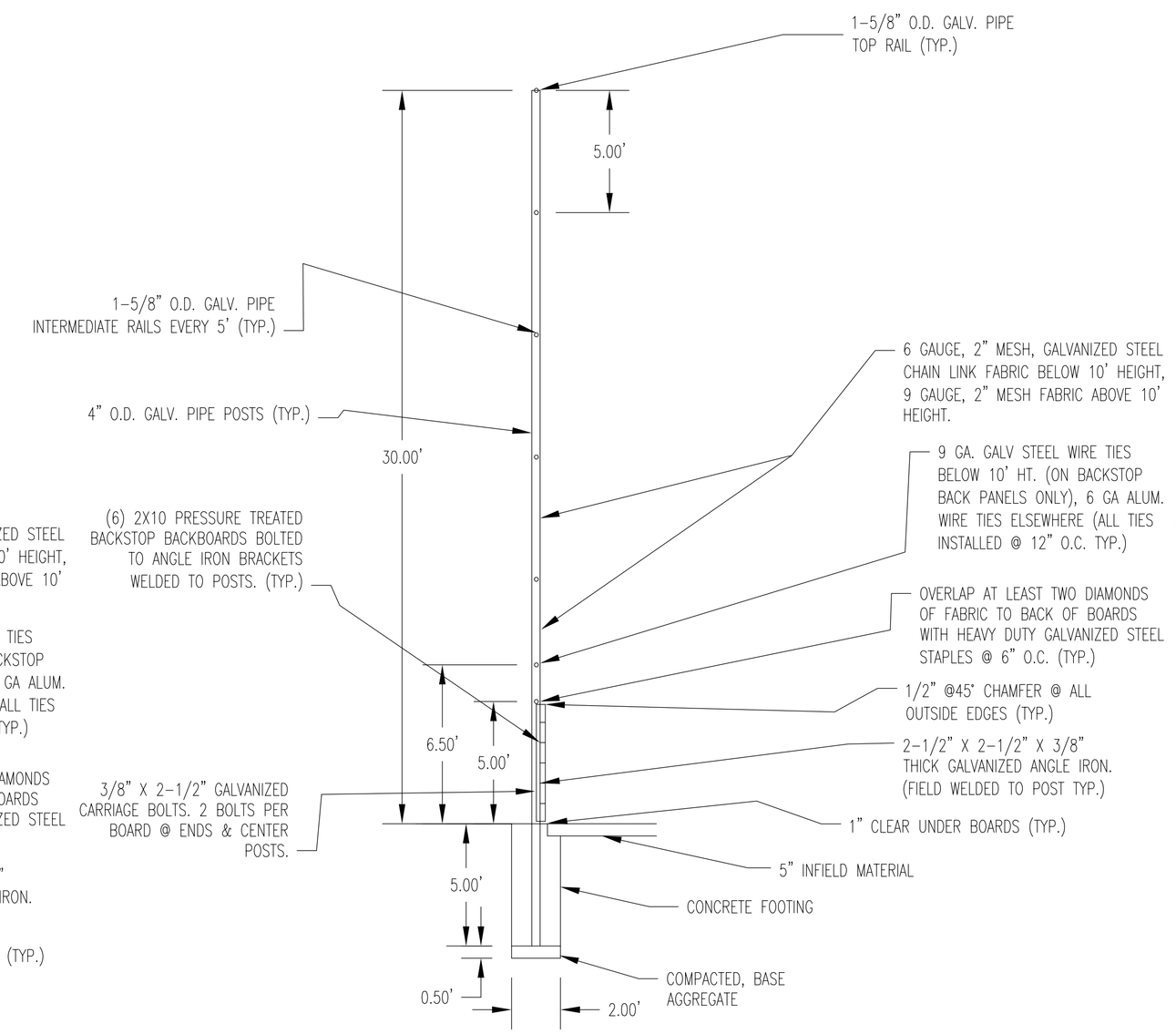

BACKSTOP SECTION

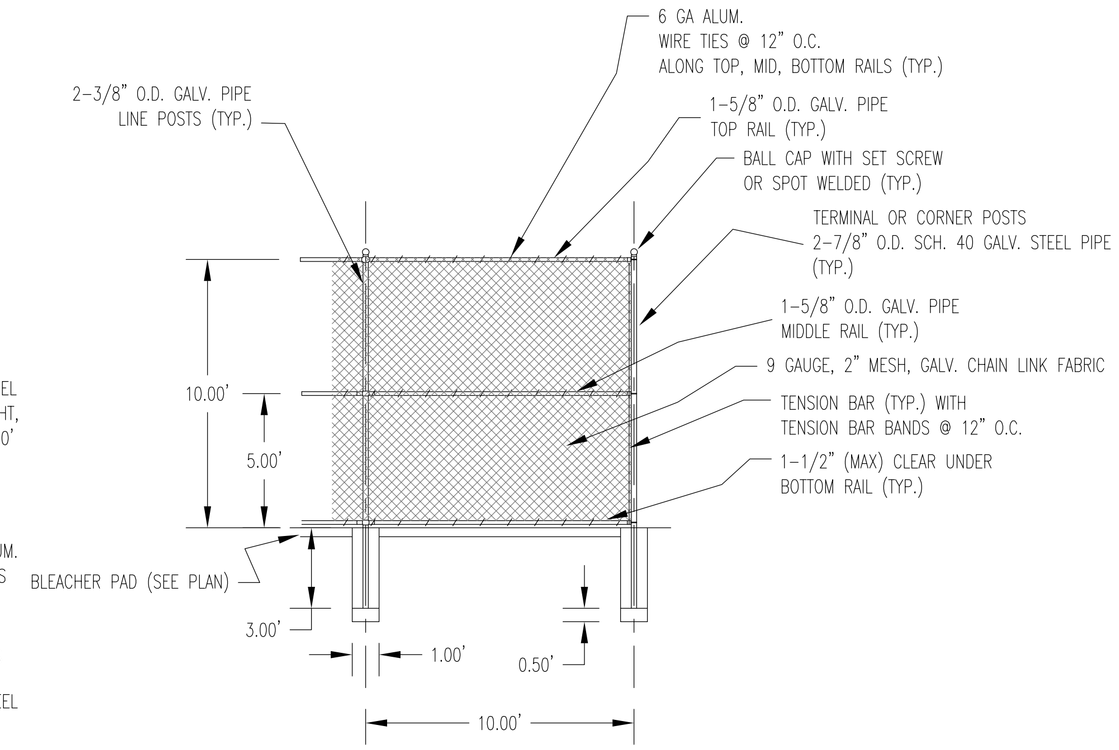

TYPICAL WING/DUGOUT FENCING

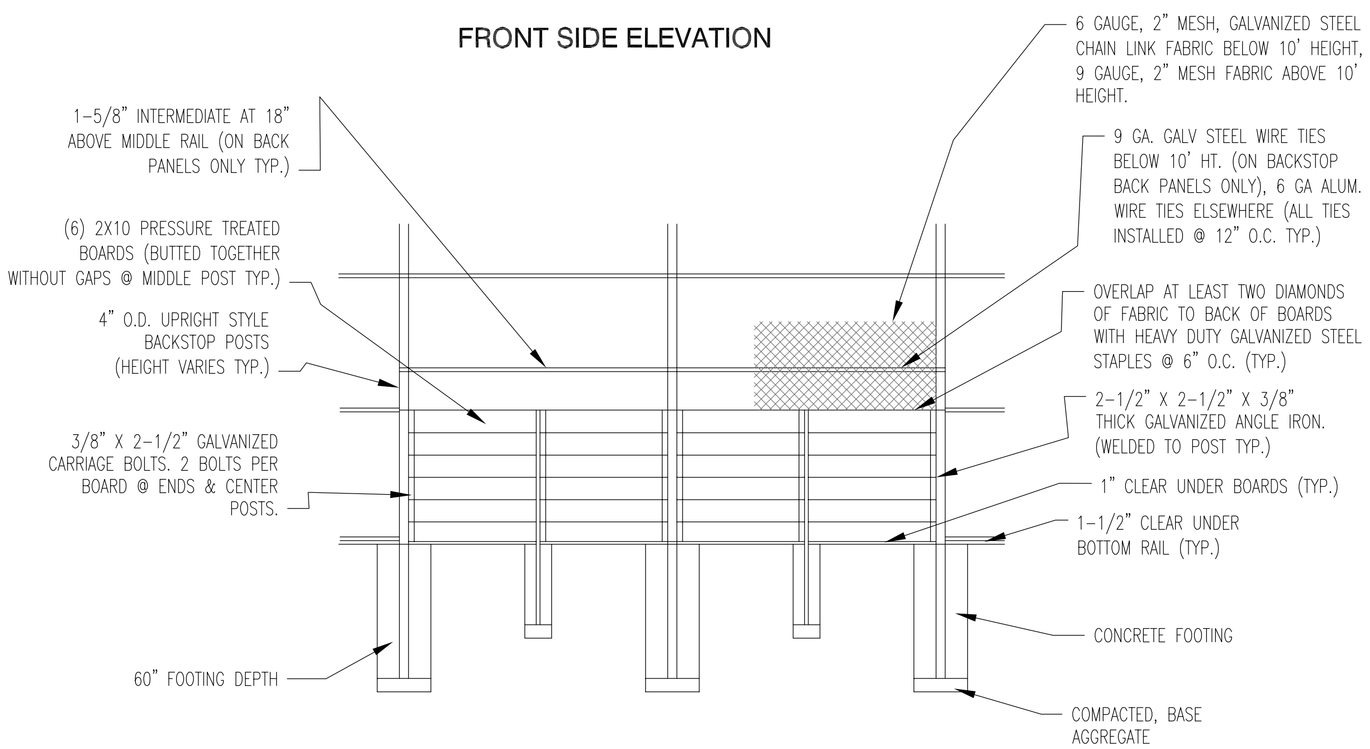

BACK SIDE ELEVATION

MCE
MIDWEST CIVIL ENGINEERS, INC.
CIVIL ENGINEERING • LAND SURVEYING • ARCHITECTURE
13560 76TH STREET
SOUTH HAVEN, MI 49090
PH: 269-637-9205
FX: 269-637-9206

SOUTH HAVEN AREA RECREATIONAL PARK
BASEBALL FIELD FENCE/BACKSTOP

CASCO TOWNSHIP
ALLEGAN COUNTY

SCALE:	DRAWN:	SHEET	OF SHEETS	PROJECT NO.
NO SCALE	03/2013 MD	18	21	11-041

REVISIONS: 11/19/13 CHANGED PHASE I LIMITS

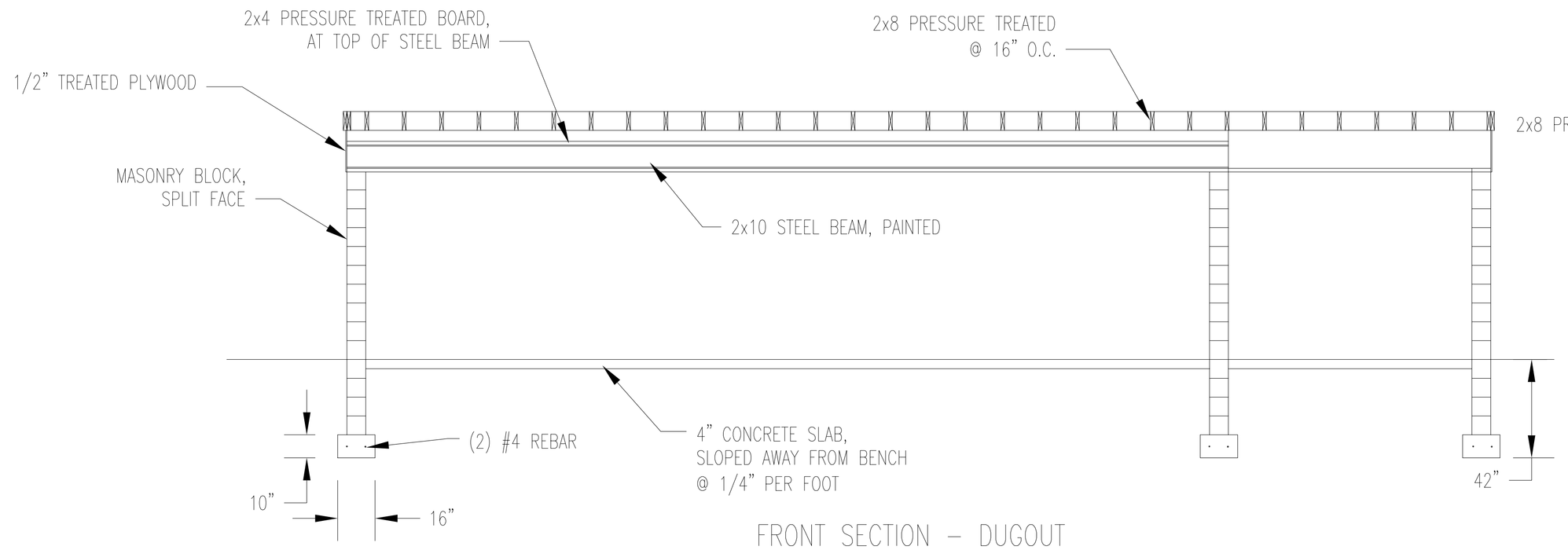

FRONT SECTION – DUGOUT

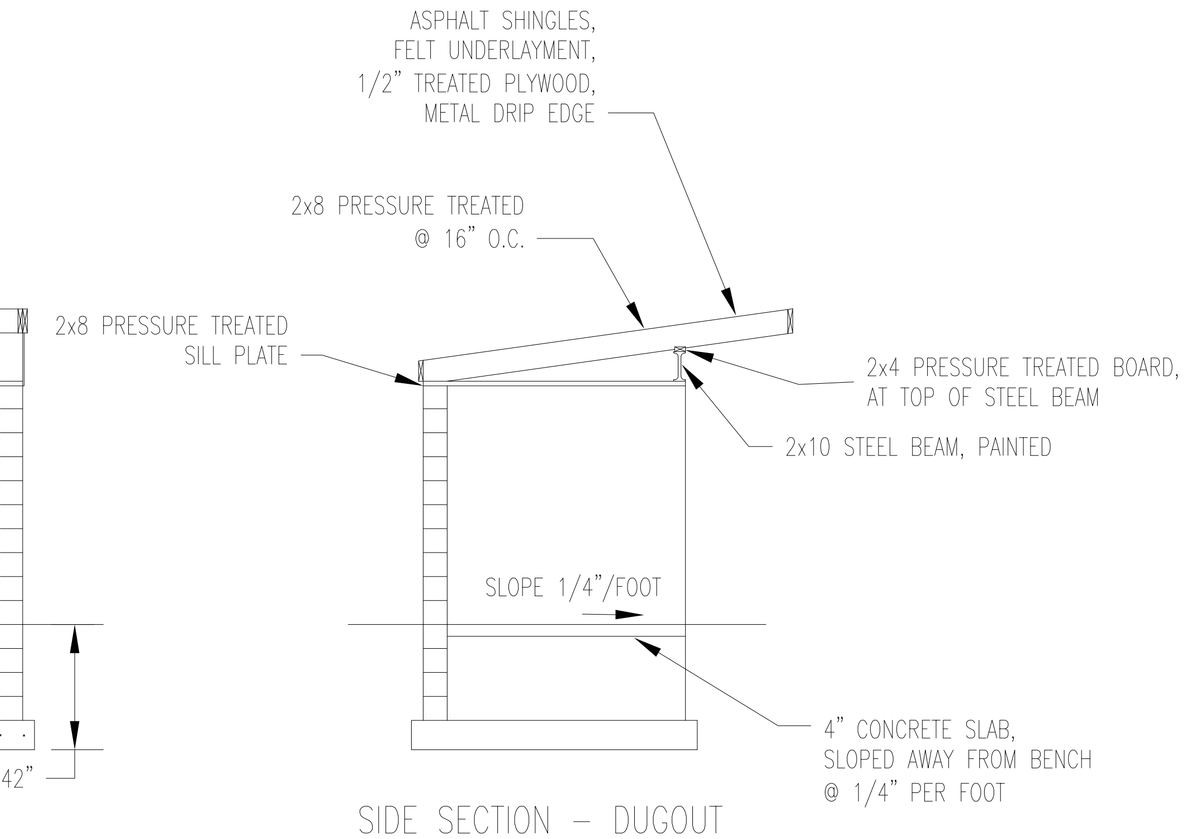

SIDE SECTION – DUGOUT

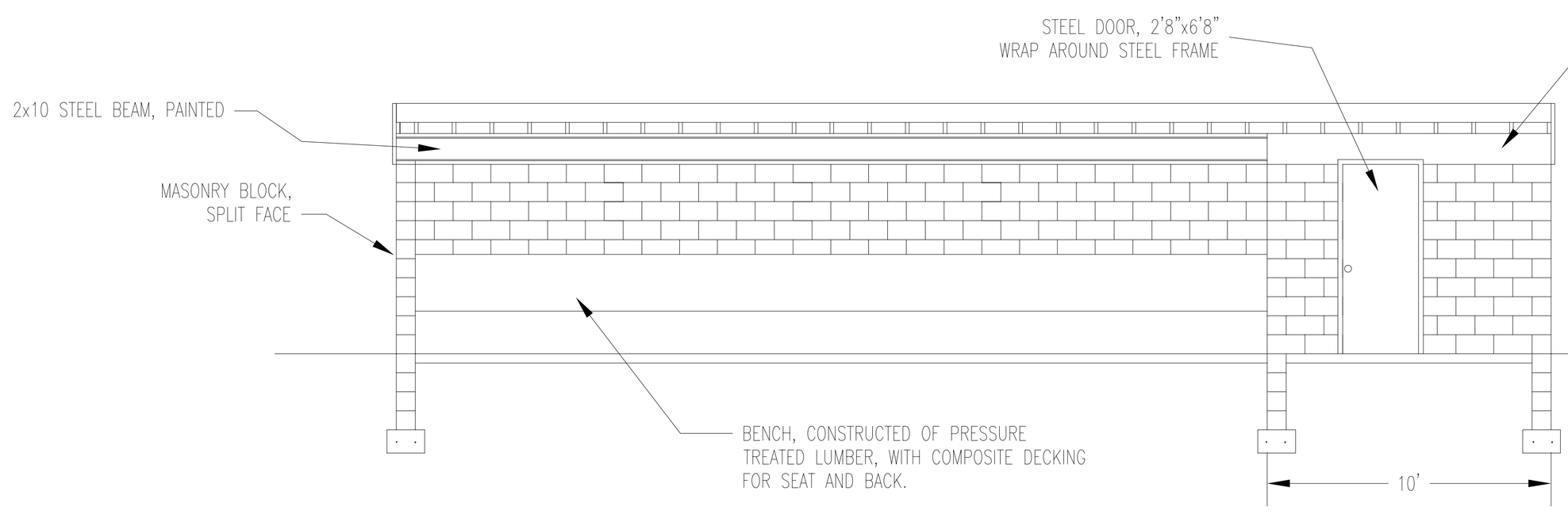

FRONT ELEVATION – DUGOUT

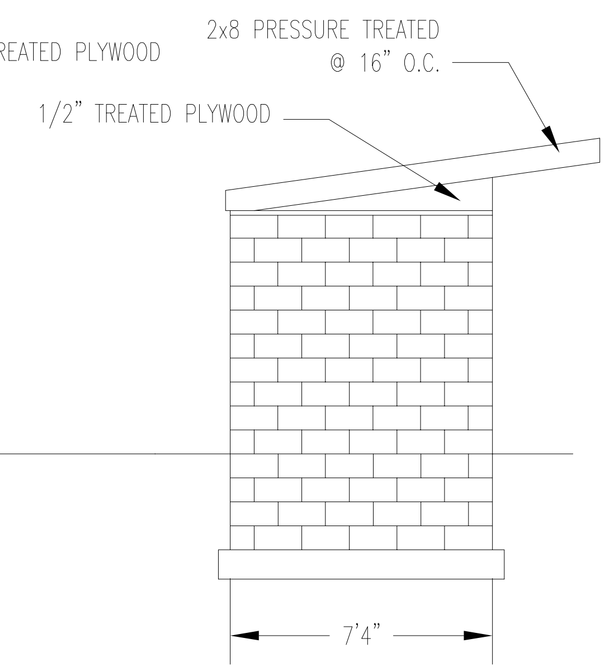

SIDE ELEVATION – DUGOUT

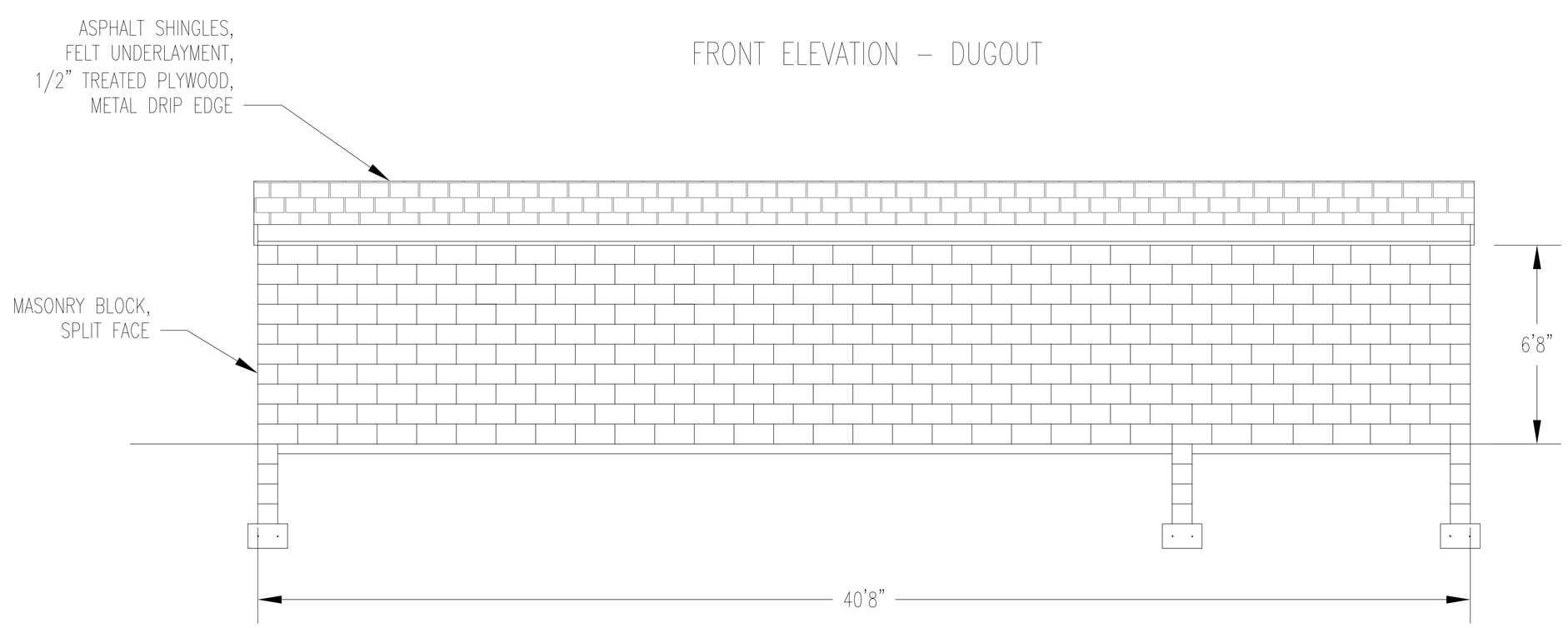

BACK ELEVATION – DUGOUT

MCE

MIDWEST CIVIL ENGINEERS, INC.
CIVIL ENGINEERING • LAND SURVEYING • ARCHITECTURE
13560 76TH STREET
SOUTH HAVEN, MI 49090
PH: 269-637-9205
FX: 269-637-9206

SOUTH HAVEN AREA RECREATIONAL PARK
TYPICAL DUGOUT ELEVATIONS & SECTIONS

CASCO TOWNSHIP
ALLEGAN COUNTY

SHEET 19 OF 21 SHEETS

PROJECT NO. 11-041

SCALE: NO SCALE

DRAWN: 03/2013 MD

REVISIONS: 11/19/13 CHANGED PHASE I LIMITS

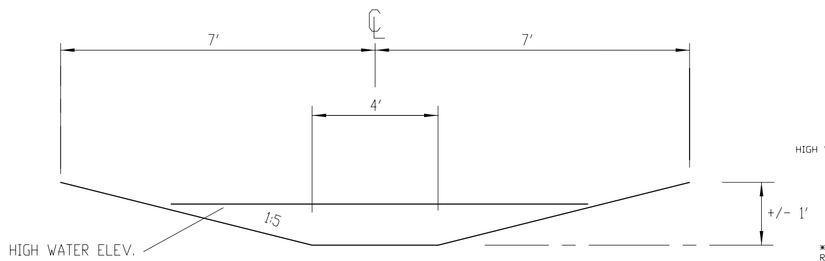

TYPICAL SWALE DITCH CROSS-SECTION

NOT TO SCALE

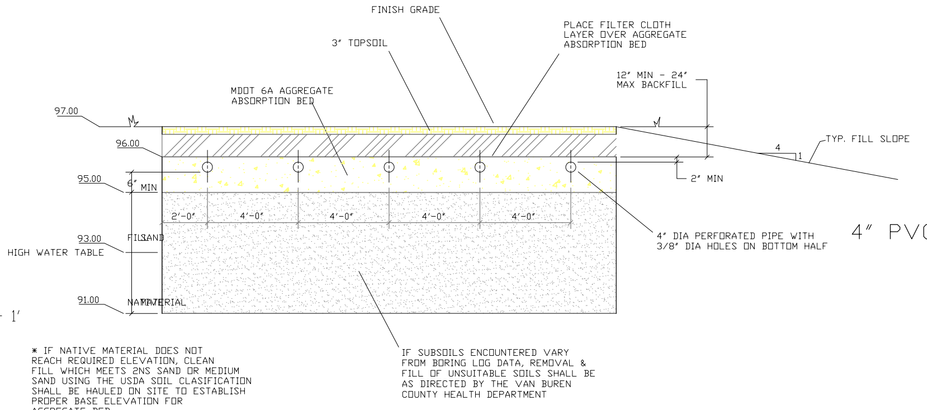

PROPOSED TILE FIELD CROSS SECTION DETAIL

NOT TO SCALE

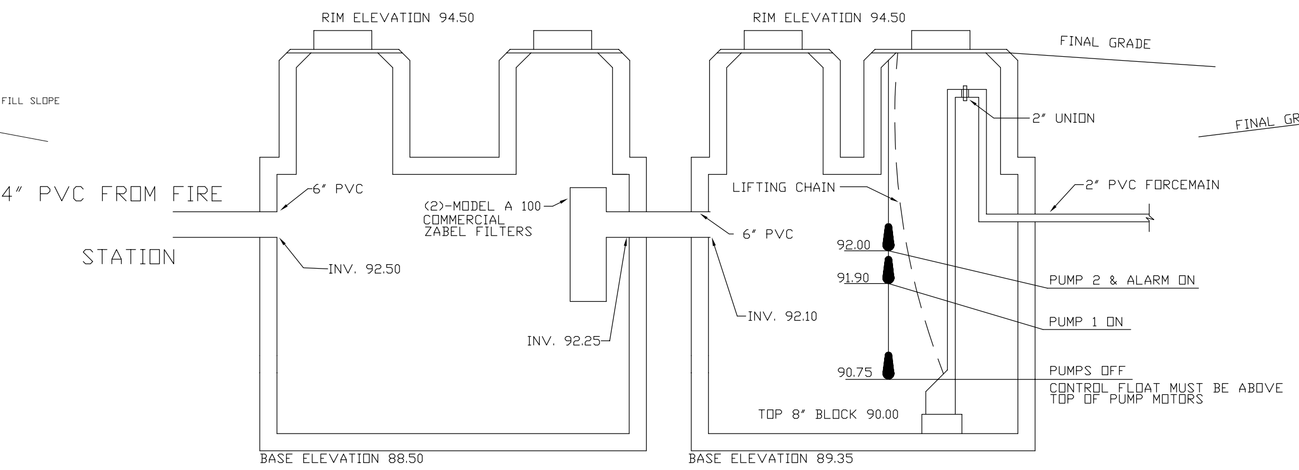

1500 GAL. SEPTIC TANK
TWO COMPARTMENT
WIDTH - 67"
LENGTH - 10'
HEIGHT - 59"
INLET DEPTH - 49"

500 GAL. DOSING CHAMBER
W/PUMPS
WIDTH - 62"
LENGTH - 96"
HEIGHT - 41"
INLET DEPTH - 29"

SEPTIC SYSTEM PROFILE

NOT TO SCALE

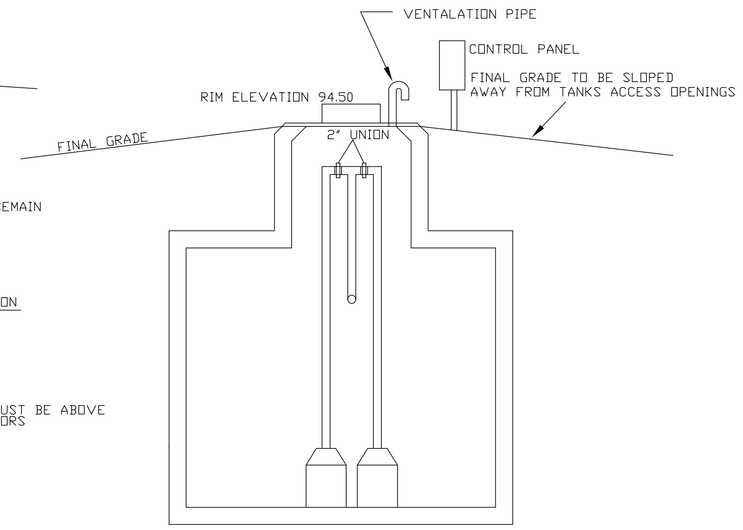

500 GAL. DOSING CHAMBER
W/PUMPS

SEPTIC SYSTEM NOTES:
1) ACCESS COVERS TO BE ULTRA RIB ACCESS RISERS COVERS WITH A 24" CLEAR OPENING WITH BOLT DOWN COVERS. PTRA ABS TANK ADAPTERS WILL ALSO BE INSTALLED IN THE OPENING.
2) SEPTIC TANKS AND DOSING CHAMBER MUST BE TESTED FOR WATER TIGHTNESS. FILL TANKS WITH WATER AND OBSERVE FOR ANY DROP IN WATER LEVEL OVER A 24 HOUR PERIOD, OR OBSERVE EMPTY TANKS TO SEE IF ANY WATER ENTERS FOR THOSE SITUATIONS WHERE THE WATER TABLE IS ABOVE THE JOINTS AND OTHER OPENINGS IN THE TANKS.
3) SEPTIC TANKS AND DOSING CHAMBER ASSUMED TO HAVE A 3 1/2 INCH TYPICAL WALL THICKNESS.

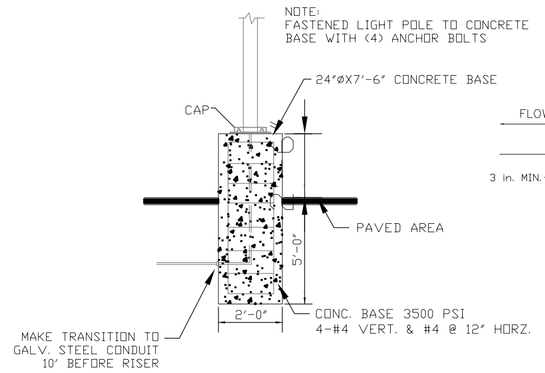

LIGHT POLE IN PARKING LOT @ PAVING OR NON-CURBED LOCATIONS

LIGHT POLE DETAILS

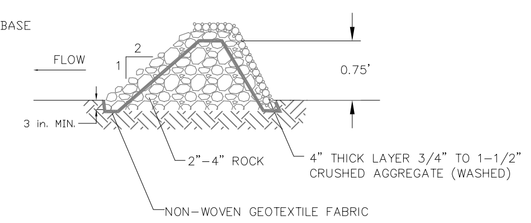

STONE BERM DETAIL

NOT TO SCALE

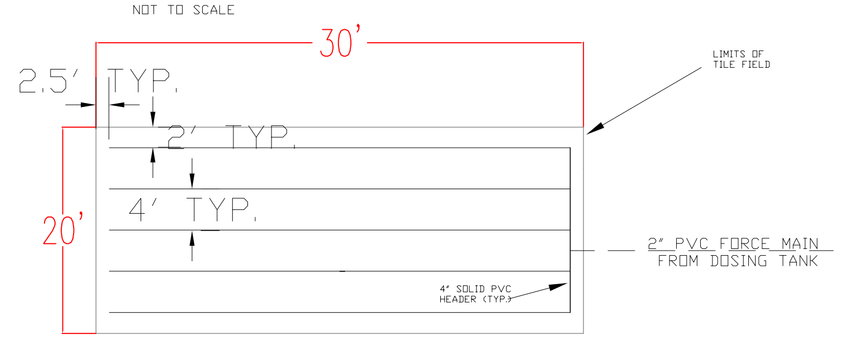

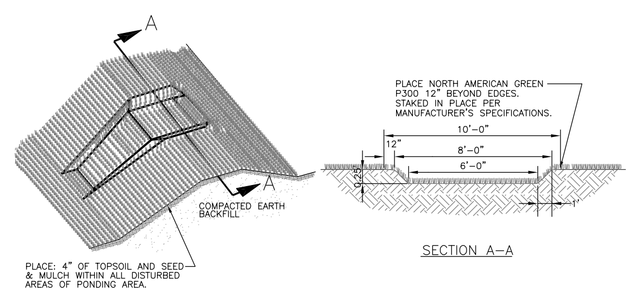

SECTION A-A

EMERGENCY SPILLWAY

NOT TO SCALE

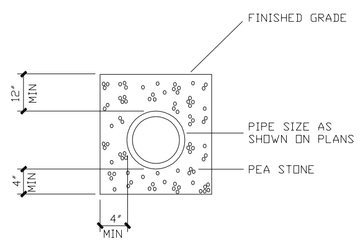

SOCK TUBE DETAIL

NOT TO SCALE

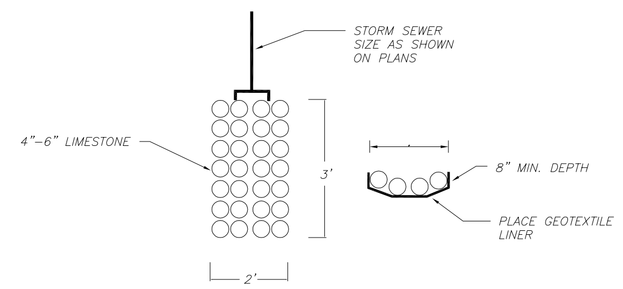

RIP RAP DETAIL

NOT TO SCALE

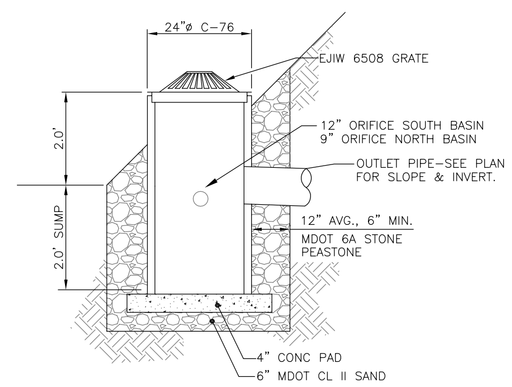

DETENTION POND OUTLET STRUCTURE

NOT TO SCALE

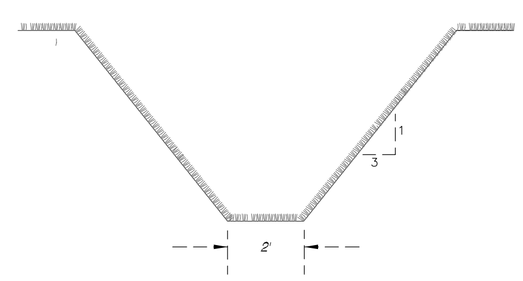

GRASSED WATERWAY (DITCH)

NOT TO SCALE

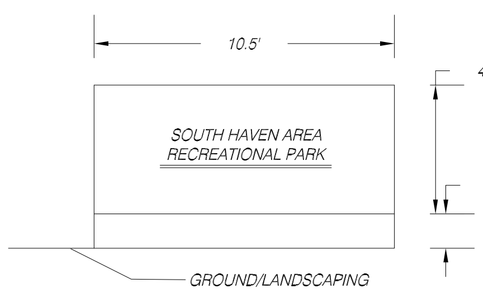

PROPOSED SIGN

NOT TO SCALE

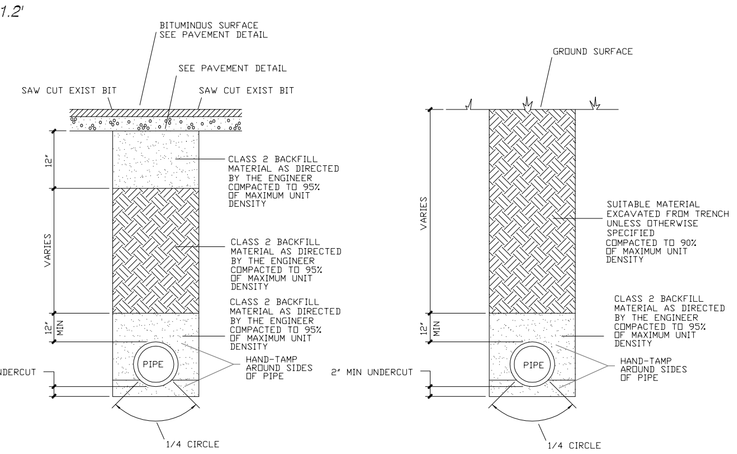

TYPICAL TRENCH DETAIL
UNDER ASPHALT SURFACES ONLY
NOT TO SCALE

TYPICAL TRENCH DETAIL

NOT TO SCALE

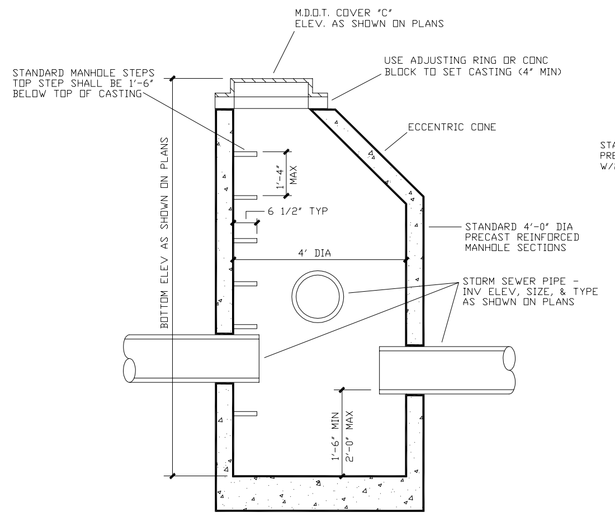

4' DIA DRAINAGE STRUCTURE

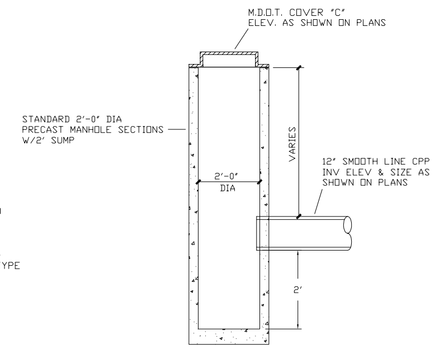

2' DIA DRAINAGE STRUCTURE

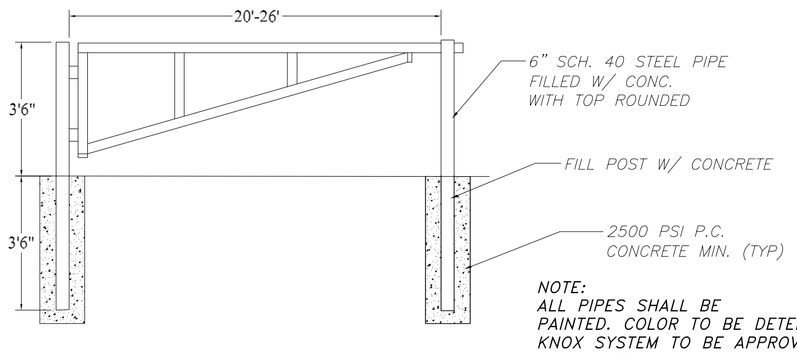

GATE DETAIL

NOTE:
ALL PIPES SHALL BE PAINTED. COLOR TO BE DETERMINED. KNOX SYSTEM TO BE APPROVED BY FIRE MARSHALL.

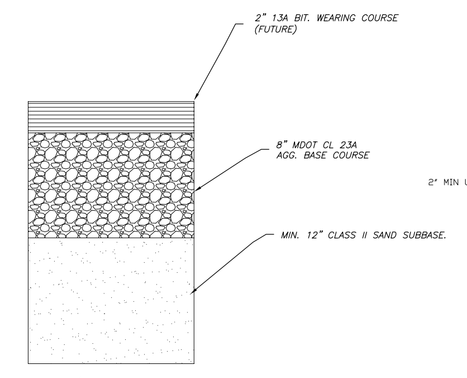

PARKING/PAVEMENT SECTION

NOT TO SCALE

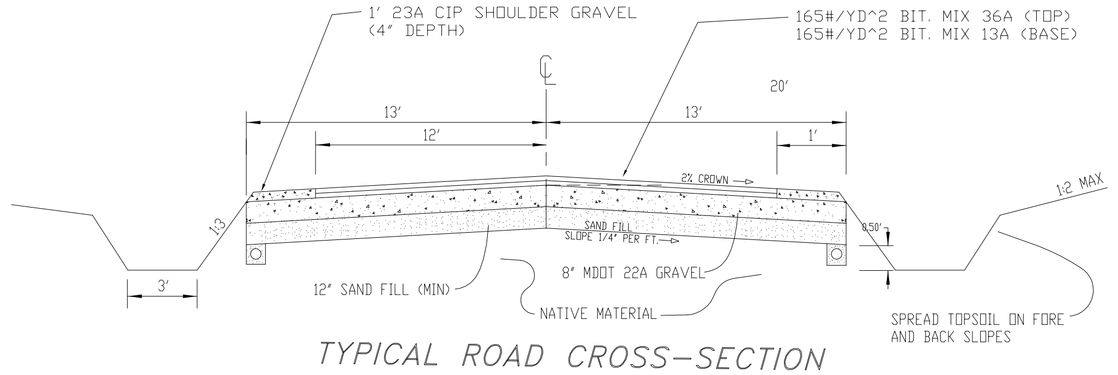

TYPICAL ROAD CROSS-SECTION

NOT TO SCALE

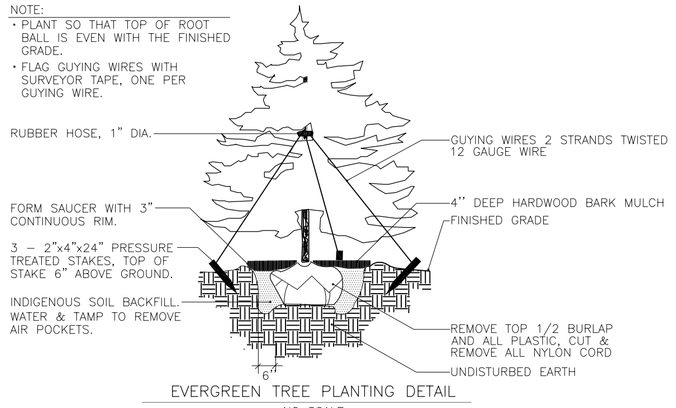

EVERGREEN TREE PLANTING DETAIL

NO SCALE

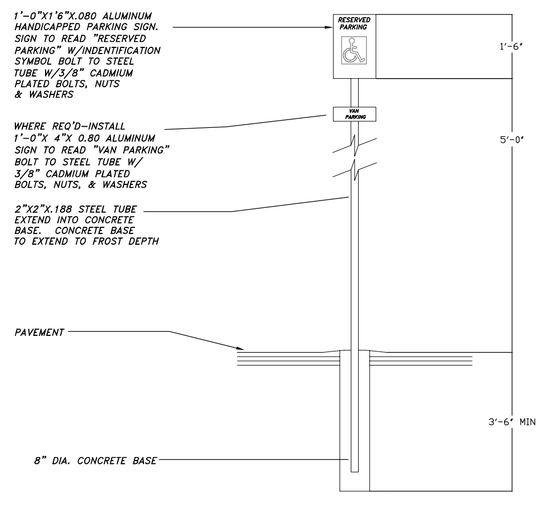

HANDICAP PARKING SIGN DETAIL

NOT TO SCALE

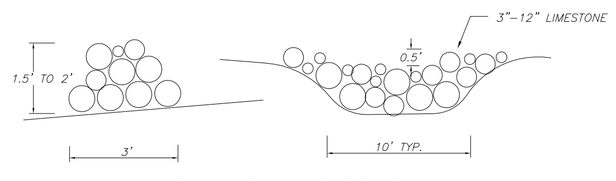

CHECK DAM DETAIL

MCE

MIDWEST CIVIL ENGINEERS, INC.
CIVIL ENGINEERING • LAND SURVEYING • ARCHITECTURE
13560 76TH STREET
SOUTH HAVEN, MI 49090
PH: 269-637-9205
FX: 269-637-9206

SOUTH HAVEN AREA RECREATIONAL PARK
TYPICAL DETAILS

CASCO TOWNSHIP
ALLEGAN COUNTY

SHEET	OF	PROJECT NO.
20	21 SHEETS	11-041

SCALE:	DRAWN:	REVISIONS
NO SCALE	04/2011 MD	REVISIONS-REVISIONS PER CASCO PLANNING COMMISSION, 08/03/11
		CHANGED GATE DETAIL, 09/20/11
		11/19/13 CHANGED PHASE 1 LIMITS

N

0 75 150 300

GRAPHIC SCALE
ELEVATION DATUM: NAVD 88

HIGHWA

(300' R.O.W.)

N89°28'15"E

1456.22'

S00°31'45"E
350.00'

N89°28'15"E
400.00'

CASCO TWP.

STREET

12" C.P.P. CULVERT
INV. EL.= 653.45'

12" C.P.P. CULVERT
INV. EL.= 652.92'

448.92'

S00°31'45"E

CENTER OF
SECTION 30
T. 1 N., R. 16 W.
CASCO TWP.

N89°57'01"W
296.00'

300.00' S00°27'54"E

296.00' N89°57'01"E

(66' R.O.W.)

12" C.M.P. CULVERT
INV. EL.= 632.85'

12" C.M.P. CULVERT
INV. EL.= 632.04'

N00°34'00"W
404.11'

S89°56'43"W
642.00'

N09°06'33"W

537.00'

71ST
N. & S. 1/4 LINE

S00°27'54"E

6" P.V.C. PIPE
INV. EL.= 619.44'

12" C.M.P. CULVERT
INV. EL.= 617.24'

C.M.P. CULVERT
INV. EL.= 608.85'

E. & W. 1/8 LINE, SW 1/4

S89°56'43"W

1714.91'

103RD

(66' R.O.W.)

STREET

12" C.M.P. CULVERT
INV. EL.= 634.49'

12" C.M.P. CULVERT
INV. FL.= 625.72'

12" C.M.P. CULVERT
INV. EL.= 625.06'

48" CONCRETE CULVERT
INV. EL.= 607.95'

6" C.M.P. CULVERT
INV. EL.= 612.75'

12" C.M.P. CULVERT
INV. EL.= 617.09'

SE CORNER,
NE 1/4, SW 1/4
SECTION 30
T. 1 N., R. 16 W.
CASCO TWP.

ORNER,
SW 1/4

PROPOSED CONTOURS
EXISTING CONTOURS
PROPOSED SPOT ELEVATIONS-TOP OF PAVEMENT
PROPOSED SPOT ELEVATIONS-TOP OF CONCRETE
PROPERTY CORNER
RIGHT-OF-WAY/PROPERTY LINE
POWER POLE
SIGN
TELEPHONE PEDESTAL
UNDERGROUND ELECTRICAL CONDUIT
SECTION CORNER
MAILBOX
PROPOSED CULVERT
PROPOSED STORM & CATCHBASIN
PROPOSED LIGHTING
DIRECTION OF SURFACE RUN-OFF
EXISTING CONIFER TREE
EXISTING BROADLEAF TREE
ELECTRIC BOX
TV CABLE BOX
EASEMENT
FENCE LINE
SAN. SEWER CLEANOUT
EX. GAS MARKER
EXISTING STORM MANHOLE
EXISTING STORM CB
EXISTING STORM SEWER
EX. TELEPHONE
EX. ELECTRIC UG
EX. ELECTRIC OH
EX. POWER POLE W/LIGHT
EXISTING ASPHALT SURFACE
PROPOSED SILT FENCE
PHASE LINE
EXISTING TREES
PROPOSED TREE, SEE PLAN
PROPOSED TYPICAL DRAINAGE SWALE
PROPOSED RELOCATED ELECTRICAL LINE
TREES TO BE REMOVED
TREES TO REMAIN

MCE
MIDWEST CIVIL ENGINEERS, INC.
CIVIL ENGINEERING • LAND SURVEYING • ARCHITECTURE
13560 76TH STREET
SOUTH HAVEN, MI 49090
PH: 269-637-9205
FX: 269-637-9206

SOUTH HAVEN AREA RECREATIONAL PARK EXISTING TOPOGRAPHICAL SURVEY & TREE REMOVAL

CASCO TOWNSHIP
ALLEGAN COUNTY

SCALE:	DRAWN	SHEET	OF	PROJECT NO.
NO SCALE	03/2013 MD	21	21 SHEETS	11-041

REVISIONS:

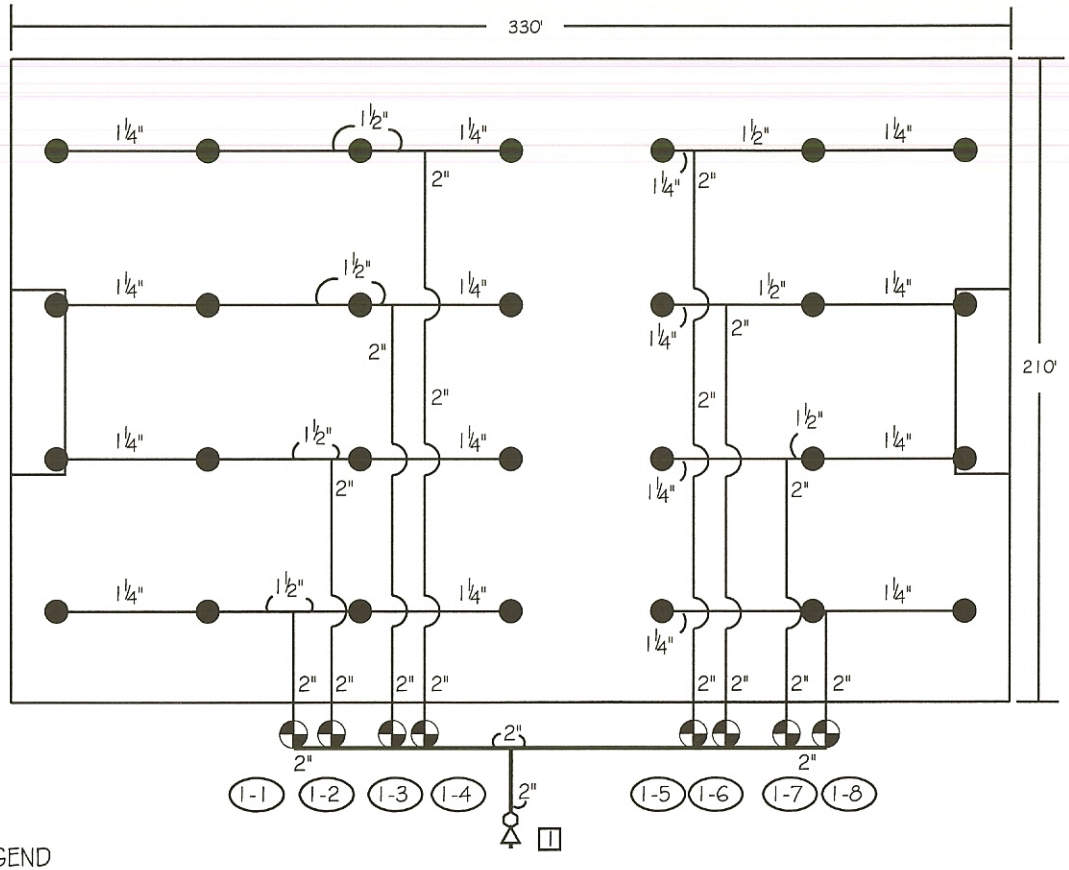

LEGEND

●	644-02-41	#41 NOZZLE	TORO GEAR DRIVEN ROTARY POP-UP
●	2001F	#9 NOZZLE	TORO GEAR DRIVEN ROTARY POP-UP
◐	252-26-06		TORO 1-1/2" ELECTRIC VALVE
⬡	474-00		TORO 1" QUICK COUPLER
1	CCP9		TORO CUSTOM COMMAND ELECTRIC CONTROLLER
△	BACKFLOW PREVENTER AS REQUIRED PER STATE AND LOCAL CODES		
——	PVC 160# PIPE (ALL PIPE)		
NOT SHOWN	#14 UL APPROVED 24V RED CONTROL WIRE W/A #14 UL APPROVED 24V WHITE COMMON WIRE		

640 SERIES WATER REQUIREMENTS: 41 GPM @ 62 PSI

2001 SERIES WATER REQUIREMENTS: 37 GPM @ 62 PSI

NOTE: ALL VALVES SHALL BE LOCATED OFF PLAYING SURFACE.

CONTROLLER NUMBER

ZONE NUMBER SYMBOL — 1-1 — STATION NUMBER

TYPICAL 4 ROW, SEVEN HEAD SOCCER FIELD
USING 2001, OR 640'S

SCALE: 1" = 60'

#14

LEGEND

	64X-02-42		TORO GEAR DRIVEN ROTARY POP-UP
	2001	#12 NOZZLE	TORO GEAR DRIVEN ROTARY POP-UP
	2001F	#12 NOZZLE	TORO GEAR DRIVEN ROTARY POP-UP
	252-26-06		TORO 1-1/2" ELECTRIC VALVE
	474-00		TORO 1" QUICK COUPLER
	474-01		TORO 1" QUICK COUPLER WITH VINAL COVER
1	CCP12		TORO CUSTOM COMMAND 9 STATION CONTROLLER
	BACKFLOW PREVENTER AS REQUIRED PER STATE AND LOCAL CODE.		
	PVC 160# PIPE (ALL PIPE 1-1/4" & LARGER)		
NOT SHOWN	#14 UF-UL APPROVED 24V CONTROL WIRE W/A #14 UL APPROVED 24V WHITE COMMON WIRE		

640 WATER REQUIREMENTS: 56 GPM @ 75 PSI

2001 WATER REQUIREMENTS: 52 GPM @ 75 PSI

NOTE: A TORO 850-74 RAIN SWITCH CAN BE ADDED TO AN ELECTRIC SYSTEM.

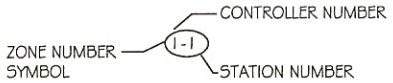

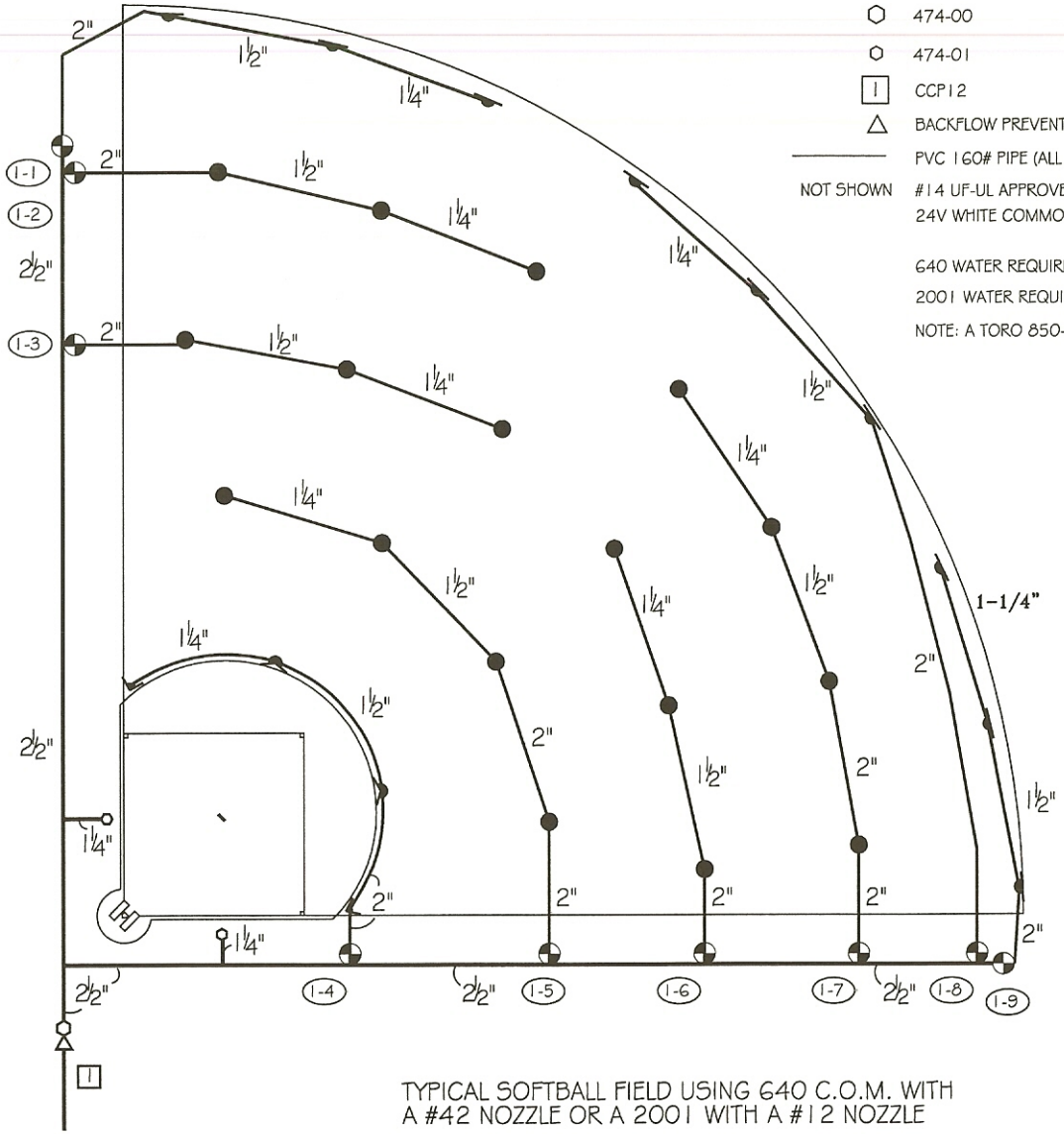

TYPICAL SOFTBALL FIELD USING 640 C.O.M. WITH
A #42 NOZZLE OR A 2001 WITH A #12 NOZZLE

SCALE: 1"=60'

#11