City of South Haven

VOLUME NO. 1

CONTRACT DOCUMENTS AND SPECIFICATIONS
FOR:
SOUTH HAVEN SRF PROJECTS:

- Contract No. 1: North Shore Drive Reconstruction Project
- Contract No. 2a: Monroe Boulevard and Indian Grove Lift Station Reconstruction Project
- Contract No. 2b: Kalamazoo Street Reconstruction Project – Phase IV
- Contract No. 3: Dunkley and Black River Infrastructure Improvements

OWNER:
CITY OF SOUTH HAVEN
539 PHOENIX STREET
SOUTH HAVEN, MI 49090

ENGINEER:
ABONMARCHE
95 WEST MAIN STREET
BENTON HARBOR, MI 49022

STATE OF MICHIGAN
TIMOTHY R. DREWS
ENGINEER
No. 40957
LICENSED PROFESSIONAL ENGINEER

MAY 13, 2016

SRF PROJECT NO.: 5602-01
ACI PROJECT NO.: 14-0890 | 14-0891 | 14-0919 | 14-0920

SECTION 00 01 10

TABLE OF CONTENTS

DIVISION - SECTION			PAGE
DIVISION 00 – PROCUREMENT AND CONTRACTING REQUIREMENTS			
00 11 16	Advertisement for Bids		1/1
00 21 15	Instructions to Bidders	EJCDC C-200	1/12
00 41 43	Bid Form - Unit Price	EJCDC C-410	1/12
00 43 13	Bid Security	EJCDC C-430	1/1
00 51 00	Notice of Award	EJCDC C-510	1/2
00 52 00	Agreement Form	EJCDC C-520	1/9
00 61 13.13	Performance Bond Form	EJCDC C-610	1/3
00 61 13.16	Payment Bond Form	EJCDC C-615A	1/3
00 72 00	General Conditions	EJCDC C-700	1/66
00 73 00	Supplementary Conditions	EJCDC C-800	1/14
DIVISION 01 – GENERAL REQUIREMENTS			
01 10 00	Summary of Work		1/3
01 20 00	Price and Payment Procedures		1/3
01 30 00	Administrative Requirements		1/4
01 33 00	Submittal Procedures		1/3
01 40 00	Quality Requirements		1/4
01 50 00	Temporary Facilities and Controls		1/5
01 60 00	Product Requirements		1/3
01 70 00	Execution and Closeout Requirements		1/4
01 74 19	Construction Waste Management and Disposal		1/1
DIVISION 03 – CONCRETE			
03 30 00	Cast-in-Place Concrete		1/6
03 41 13	Precast Concrete Hollow Core Planks (Volume No. 2)		1/5
03 45 00	Precast Architectural Concrete (Volume No. 2)		1/6
DIVISION 04 – 05-NOT USED			

DIVISION 06 – ROUGH CARPENTRY

06 10 00	Rough Carpentry	1/4
06 73 00	Composite Wood Decking- Alternative	1/4

DIVISION 07 – THERMAL AND MOISTURE PROTECTION (VOLUME NO. 2)

DIVISION 8 – OPENINGS (VOLUME NO. 2)

DIVISION 9 – FINISHES (VOLUME NO. 2)

DIVISION 10 – SPECIALTIES

10 14 53	Traffic Signage	1/5

DIVISION 11 – NOT USED

DIVISION 12 – FURNISHINGS

12 93 00	Site Furnishings	1/2

DIVISION 13-21 – NOT USED

DIVISION 22 – PLUMBING (VOLUME NO. 2)

DIVISION 23 – HEATING, VENTILATING, AND AIR CONDITIONING (VOLUME NO. 2)

DIVISION 26 – ELECTRICAL (VOLUME NO. 2)

DIVISION 31 – EARTHWORK

31 10 00	Site Clearing and Demolition	1/7
31 22 13	Rough Grading	1/6
31 23 19	Dewatering	1/5
31 23 23.33	Flowable Fill	1/5
31 23 33	Trenching and Backfilling	1/8
31 25 00	Erosion and Sedimentation Control	1/8

DIVISION 32 – EXTERIOR IMPROVEMENTS

32 01 16	Flexible Paving Rehabilitation	1/7
32 05 19.19	Geogrids For Exterior Improvements	1/4
32 11 16	Subbase Courses	1/4
32 11 23	Aggregate Base Courses	1/4
32 12 16	Asphalt Paving	1/5
32 13 13	Concrete Paving	1/13
32 17 23	Pavement Markings	1/6
32 91 19	Landscape Grading	1/4
32 92 19	Seeding	1/7

DIVISION 33 – UTILITIES

33 01 30.13	Sewer and Manhole Testing	1/5
33 05 13	Public Manholes and Structures	1/16
33 05 14	Utility Horizontal Directional Drilling	1/10
33 11 13	Public Water Utility Distribution Piping	1/18
33 12 13	Water Service Connections	1/12
33 13 00	Disinfection of Water Utility Distribution	1/5
33 32 19	Public Utility Wastewater Pumping Stations	1/14
33 32 19.01	Public Utility Wastewater Pumping Stations – Submersible Type	1/8
33 32 19.02	Wastewater Utility Pumping Stations - Electrical Work	1/9
33 32 19.03	Wastewater Utility Pumping Stations – Controls and Instrumentation	1/9
33 32 19.04	Public Utility Wastewater Pumping Station- Grinder & Debris Removal	1/4
33 34 00	Sanitary Utility Sewerage Force Mains	1/13
33 41 13	Storm Utility Drainage Piping	1/13
33 46 16	Subdrainage Piping	1/6

DIVISION 34 – TRANSPORTATION

34 71 13	Vehicle Barriers	1/3

DIVISION 35-48 – NOT USED

MICHIGAN DEPARTMENT OF TRANSPORTATION SUPPLEMENTAL SPECIFICATIONS AND SPECIAL PROVISIONS

MDOT 12SS-001A-10 Supplemental Specification for Errata to the 2012 Standard Specifications

MDOT 12SP-501E-04 Special Provision for Recycled Hot Mix Asphalt Mixture on Local Agency Projects

MDOT 12SP-501J-04 Special Provision for Acceptance of Hot Mix Asphalt Mixture on Local Agency Projects

MDOT 12SP-902E-03 Special Provision for Superpave Final Aggregate Blend Requirements

DUNKLEY & BLACK RIVER INFRASTRUCTURE IMPROVEMENTS SPECIAL PROVISIONS

Special Provision for Structural Concrete

Special Provision for Structural Steel

Special Provision for Timber Piling

Appendices:

Appendix A: Employment Matter & Wages

A-1 Davis Bacon Wages

A-2 Labor Standards Provisions for Federally Assisted Projects

A-3 Disadvantage Business Enterprises (DBE) Requirements

Appendix B: Materials Certification

B-1: American Iron and Steel Contract Language

Appendix C: Contract 3: Geotechnical and Soil/Groundwater Investigations

C-1: Geotechnical Investigation Report

C-2: Utility Corridor Investigation Report for the Main Lift Station and Black River Street Reconstruction Project

DOCUMENT 00 11 16

ADVERTISEMENT FOR BIDS

The City of South Haven, Michigan, is seeking bids for road and utility reconstruction of the SRF Project, consisting of the following Contracts:

Contract 1: North Shore Drive Reconstruction Project – 0.97 miles of roadway reconstruction from Dyckman Avenue to Basline Road, including sanitary and storm sewer reconstruction, water service and fire hydrant replacement.

Contract 2a: Monroe Boulevard and Indian Grove Lift Station – 0.50 miles of roadway reconstruction from Bluffwood Road to Aylworth Avenue, including lift station rehabilitation, sanitary and storm sewer construction, horizontal directional drilling, force main replacement, water main replacement, water service and fire hydrant replacement. Contract 2b: Kalamazoo Street Reconstruction Phase IV – 0.28 miles of roadway reconstruction, sanitary sewer construction, horizontal directional drilling, force main replacement, and water main improvements.

Contract 3: Main Lift Station Sewer Rerouting and Black River Street Reconstruction – 0.50 miles of roadway reconstruction, lift station demolition and construction, sanitary and storm sewer construction, horizontal directional drilling, force main installation, water main installation.

Printed Bidding Documents will be available for pickup (electronic - free of charge, hard copies $75.00 per Contract) from the Issuing Office starting on June 8, 2016 (call ahead to confirm availability). Electronic Bidding Documents may be viewed online at www.south-haven.com. Bidders wishing to receive any addenda which may be published during the bidding period must register on the plan holders list at the Issuing Office.

PRE-BID MEETING: A pre-bid meeting will be held at 1:30pm on June 28, 2016, at the South Haven DPW Building. Attendance will not be mandatory, but bidders are encouraged to attend as this will be an opportunity to review the project plans with the Engineer and ask questions prior to bidding.

BID-OPENING: Bids will be received at the South Haven DPW Building until 2:00pm on Monday, July 11, 2016 at which time and place Bids will be opened and publicly read aloud. Bidders will be required to provide Bid security in the form of a certified check, cashier's check, money order, or a Bid Bond, of a sum no less than 5 percent of the Bid Price, made payable to the City of South Haven, as security for the execution of the Contract.

The project is scheduled for to begin no later than September 19, 2016. Contracts #1 shall be complete by May and 2 shall be complete by May 25, 2018. Contract #3 shall be complete by August 31, 2018. See additional information regarding contract times in the agreement form provided in the bidding documents.

Refer to other bidding requirements described in Bidding Documents. Submit your Bid on the Bid Form provided. Your Bid will be required to be submitted under a condition of irrevocability for a period of 75 days after submission. The Owner reserves the right to accept or reject any or all Bids.

Owner:	Issuing Office:	South Haven DPW:
City of South Haven	Abonmarche	South Haven Public Works
539 Phoenix St.	95 West Main Street	1199 8th Avenue
South Haven, MI 49090	Benton Harbor, MI 49022	South Haven, MI 49090

END OF DOCUMENT

SECTION 00 21 15

INSTRUCTIONS TO BIDDERS

TABLE OF CONTENTS

Page

Article 1 – Defined Terms 1
Article 2 – Copies of Bidding Documents 1
Article 3 – Qualifications of Bidders 1
Article 4 – Examination of Bidding Documents, Other Related Data, and Site 2
Article 5 – Pre-Bid Conference 5
Article 6 – Site and Other Areas 5
Article 7 – Interpretations and Addenda 5
Article 8 – Bid Security 5
Article 9 – Contract Times 6
Article 10 – Liquidated Damages 6
Article 11 – Substitute and "Or-Equal" Items 6
Article 12 – Subcontractors, Suppliers and Others 6
Article 13 – Preparation of Bid 7
Article 14 – Basis of Bid; Comparison of Bids 8
Article 15 – Submittal of Bid 8
Article 16 – Modification and Withdrawal of Bid 9
Article 17 – Opening of Bids 9
Article 18 – Bids to Remain Subject to Acceptance 9
Article 19 – Evaluation of Bids and Award of Contract 9
Article 20 – Contract Security and Insurance 10
Article 21 - Signing of Agreement 10

Copyright © 2007 National Society of Professional Engineers for EJCDC. All rights reserved.

ARTICLE 1 – DEFINED TERMS

1.01 Terms used in these Instructions to Bidders have the meanings indicated in the General Conditions and Supplementary Conditions. Additional terms used in these Instructions to Bidders have the meanings indicated below:

A. *Issuing Office* – The office from which the Bidding Documents are to be issued and where the bidding procedures are to be administered.

ARTICLE 2 – COPIES OF BIDDING DOCUMENTS

2.01 Complete sets of the Bidding Documents in the number and for the deposit sum, if any, stated in the advertisement or invitation to bid may be obtained from the Issuing Office. The deposit will be refunded to each document holder of record who returns a complete set of Bidding Documents in good condition within 30 days after opening of Bids.

2.02 Complete sets of Bidding Documents shall be used in preparing Bids; neither Owner nor Engineer assumes any responsibility for errors or misinterpretations resulting from the use of incomplete sets of Bidding Documents.

2.03 Owner and Engineer, in making copies of Bidding Documents available on the above terms, do so only for the purpose of obtaining Bids for the Work and do not authorize or confer a license for any other use.

2.04 Owner and Engineer may distribute digital copies of Bidding Documents via email, website, or other electronic means for the purpose of maximizing availability to potential bidders, suppliers, and subcontractors. Bidders shall obtain printed copies of Bidding Documents from the Issuing Office. Owner and Engineer cannot be held responsible for any unreadable information contained in digital Bidding Documents or on any printed copy not obtained from the Issuing Office.

ARTICLE 3 – QUALIFICATIONS OF BIDDERS

3.01 To demonstrate Bidder's qualifications to perform the Work, within 2 days of Owner's request, Bidder shall submit written evidence such as financial data, previous experience, present commitments, equipment list, and such other data as may be called for below.

A. Evidence of Bidder's authority to do business in the State of Michigan.

3.02 Bidder is advised to carefully review those portions of the Bid Form requiring Bidder's representations and certifications.

Copyright © 2007 National Society of Professional Engineers for EJCDC. All rights reserved.

ARTICLE 4 – EXAMINATION OF BIDDING DOCUMENTS, OTHER RELATED DATA, AND SITE

4.01 *Subsurface and Physical Conditions*

A. The Supplementary Conditions identify:

1. Those reports known to Owner of explorations and tests of subsurface conditions at or contiguous to the Site.

2. Those drawings known to Owner of physical conditions relating to existing surface or subsurface structures at the Site (except Underground Facilities).

B. Copies of reports and drawings referenced in Paragraph 4.01.A will be made available by Owner to any Bidder on request. Those reports and drawings are not part of the Contract Documents, but the "technical data" contained therein upon which Bidder is entitled to rely as provided in Paragraph 4.02 of the General Conditions has been identified and established in Paragraph 4.02 of the Supplementary Conditions. Bidder is responsible for any interpretation or conclusion Bidder draws from any "technical data" or any other data, interpretations, opinions, or information contained in such reports or shown or indicated in such drawings.

4.02 *Underground Facilities*

A. Information and data shown or indicated in the Bidding Documents with respect to existing Underground Facilities at or contiguous to the Site is based upon information and data furnished to Owner and Engineer by owners of such Underground Facilities, including Owner, or others.

4.03 *Hazardous Environmental Condition*

A. The Supplementary Conditions identify any reports and drawings known to Owner relating to a Hazardous Environmental Condition identified at the Site.

B. Copies of reports and drawings referenced in Paragraph 4.03.A will be made available by Owner to any Bidder on request. Those reports and drawings are not part of the Contract Documents, but the "technical data" contained therein upon which Bidder is entitled to rely as provided in Paragraph 4.06 of the General Conditions has been identified and established in Paragraph 4.06 of the Supplementary Conditions. Bidder is responsible for any interpretation or conclusion Bidder draws from any "technical data" or any other data, interpretations, opinions, or information contained in such reports or shown or indicated in such drawings.

4.04 Provisions concerning responsibilities for the adequacy of data furnished to prospective Bidders with respect to subsurface conditions, other physical conditions, and Underground Facilities, and possible changes in the Bidding Documents due to differing or unanticipated subsurface or physical conditions appear in Paragraphs 4.02, 4.03, and

Copyright © 2007 National Society of Professional Engineers for EJCDC. All rights reserved.

4.04 of the General Conditions. Provisions concerning responsibilities for the adequacy of data furnished to prospective Bidders with respect to a Hazardous Environmental Condition at the Site, if any, and possible changes in the Contract Documents due to any Hazardous Environmental Condition uncovered or revealed at the Site which was not shown or indicated in the Drawings or Specifications or identified in the Contract Documents to be within the scope of the Work, appear in Paragraph 4.06 of the General Conditions.

4.05 On request, Owner will provide Bidder access to the Site to conduct such examinations, investigations, explorations, tests, and studies as Bidder deems necessary for submission of a Bid. Bidder shall fill all holes and clean up and restore the Site to its former condition upon completion of such explorations, investigations, tests, and studies. Bidder shall comply with all applicable Laws and Regulations relative to excavation and utility locates.

4.06 A. Reference is made to Article 7 of the Supplementary Conditions for the identification of the general nature of other work that is to be performed at the Site by Owner or others (such as utilities and other prime contractors) that relates to the Work contemplated by these Bidding Documents. On request, Owner will provide to each Bidder for examination access to or copies of contract documents (other than portions thereof related to price) for such other work.

B. Paragraph 6.13.C of the General Conditions indicates that if an Owner safety program exists, it will be noted in the Supplementary Conditions.

4.07 It is the responsibility of each Bidder before submitting a Bid to:

A. examine and carefully study the Bidding Documents, and the other related data identified in the Bidding Documents;

B. visit the Site and become familiar with and satisfy Bidder as to the general, local, and Site conditions that may affect cost, progress, and performance of the Work;

C. become familiar with and satisfy Bidder as to all federal, state, and local Laws and Regulations that may affect cost, progress, and performance of the Work;

D. carefully study all: (1) reports of explorations and tests of subsurface conditions at or contiguous to the Site and all drawings of physical conditions relating to existing surface or subsurface structures at the Site (except Underground Facilities) that have been identified in Paragraph 4.02 of the Supplementary Conditions as containing reliable "technical data," and (2) reports and drawings of Hazardous Environmental Conditions, if any, at the Site that have been identified in the Paragraph 4.06 of the Supplementary Conditions as containing reliable "technical data";

E. consider the information known to Bidder; information commonly known to contractors doing business in the locality of the Site; information and observations obtained from visits to the Site; the Bidding Documents; and the Site-related reports

Copyright © 2007 National Society of Professional Engineers for EJCDC. All rights reserved.

and drawings identified in the Bidding Documents, with respect to the effect of such information, observations, and documents on (1) the cost, progress, and performance of the Work; (2) the means, methods, techniques, sequences, and procedures of construction to be employed by Bidder, including applying any specific means, methods, techniques, sequences, and procedures of construction expressly required by the Bidding Documents; and (3) Bidder's safety precautions and programs;

F. agree at the time of submitting its Bid that no further examinations, investigations, explorations, tests, studies, or data are necessary for the determination of its Bid for performance of the Work at the price(s) bid and within the times required, and in accordance with the other terms and conditions of the Bidding Documents;

G. become aware of the general nature of the work to be performed by Owner and others at the Site that relates to the Work as indicated in the Bidding Documents;

H. promptly give Engineer written notice of all conflicts, errors, ambiguities, or discrepancies that Bidder discovers in the Bidding Documents and confirm that the written resolution thereof by Engineer is acceptable to Bidder; and

I. determine that the Bidding Documents are generally sufficient to indicate and convey understanding of all terms and conditions for the performance of the Work.

4.08 The submission of a Bid will constitute an incontrovertible representation by Bidder that Bidder has complied with every requirement of this Article 4, that without exception the Bid is premised upon performing and furnishing the Work required by the Bidding Documents and applying any specific means, methods, techniques, sequences, and procedures of construction that may be shown or indicated or expressly required by the Bidding Documents, that Bidder has given Engineer written notice of all conflicts, errors, ambiguities, and discrepancies that Bidder has discovered in the Bidding Documents and the written resolutions thereof by Engineer are acceptable to Bidder, and that the Bidding Documents are generally sufficient to indicate and convey understanding of all terms and conditions for performing and furnishing the Work.

ARTICLE 5 – PRE-BID CONFERENCE

5.01 *If a pre-Bid conference is to be held, the date, time, and place shall be as stated in the Advertisement for Bids. Representatives of Owner and Engineer will be present to discuss the Project. Bidders are encouraged to attend and participate in the conference. Engineer will transmit to all prospective Bidders of record such Addenda as Engineer considers necessary in response to questions arising at the conference. Oral statements may not be relied upon and will not be binding or legally effective.*

ARTICLE 6 – SITE AND OTHER AREAS

6.01 The Site is identified in the Bidding Documents. Easements for permanent structures or permanent changes in existing facilities are to be obtained and paid for by Owner unless otherwise provided in the Bidding Documents. All additional lands and access thereto

Copyright © 2007 National Society of Professional Engineers for EJCDC. All rights reserved.

required for temporary construction facilities, construction equipment, or storage of materials and equipment to be incorporated in the Work are to be obtained and paid for by Contractor.

ARTICLE 7 – INTERPRETATIONS AND ADDENDA

7.01 All questions about the meaning or intent of the Bidding Documents are to be submitted to Engineer in writing. Interpretations or clarifications considered necessary by Engineer in response to such questions will be issued by Addenda ~~mailed or delivered to all parties recorded by Engineer as having received the Bidding Documents. Questions received less than ten days prior to the date for opening of Bids may not be answered~~. Only questions answered by Addenda will be binding. Oral and other interpretations or clarifications will be without legal effect.

7.02 The Deadline for questions shall be three (3) days prior to the bid due date stated in the Advertisement for Bids. Questions received after the deadline may not be answered.

7.03 Addenda may be issued to clarify, correct, or change the Bidding Documents as deemed advisable by Owner or Engineer.

7.04 Any person wishing to receive addenda during the bidding period MUST register on the plan holders list at the Issuing Office. Addenda will be distributed to all parties recorded on the plan holders list using the contact information provided.

ARTICLE 8 – BID SECURITY

8.01 A Bid must be accompanied by Bid security made payable to Owner ~~in an amount of 5 percent of Bidder's maximum Bid price~~ in the amount stated in the Advertisement for Bids, and in the form of a certified check, bank money order, or a Bid bond (on the form attached) issued by a surety meeting the requirements of Paragraphs 5.01 and 5.02 of the General Conditions.

8.02 The Bid security of the Successful Bidder will be retained until such Bidder has executed the Contract Documents, furnished the required contract security and met the other conditions of the Notice of Award, whereupon the Bid security will be returned. If the Successful Bidder fails to execute and deliver the Contract Documents and furnish the required contract security within 15 days after the Notice of Award, Owner may consider Bidder to be in default, annul the Notice of Award, and the Bid security of that Bidder will be forfeited. Such forfeiture shall be Owner's exclusive remedy if Bidder defaults. The Bid security of other Bidders whom Owner believes to have a reasonable chance of receiving the award may be retained by Owner until the earlier of seven days after the Effective Date of the Agreement or 61 days after the Bid opening, whereupon Bid security furnished by such Bidders will be returned.

8.03 Bid security obligations of other Bidders whom Owner believes do not have a reasonable chance of receiving the award will be ~~returned~~ released within ~~seven~~ fourteen days after the Bid opening.

Copyright © 2007 National Society of Professional Engineers for EJCDC. All rights reserved.

ARTICLE 9 – CONTRACT TIMES

9.01 The number of days within which, or the dates by which, the Work is to be substantially completed and ready for final payment are set forth in the Agreement.

ARTICLE 10 – LIQUIDATED DAMAGES

10.01 Provisions for liquidated damages, if any, are set forth in the Agreement.

ARTICLE 11 – SUBSTITUTE AND "OR-EQUAL" ITEMS

11.01 The Contract, if awarded, will be on the basis of materials and equipment specified or described in the Bidding Documents, or those substitute or "or-equal" materials and equipment approved by Engineer and identified by Addendum. The materials and equipment described in the Bidding Documents establish a standard of required type, function and quality to be met by any proposed substitute or "or-equal" item. No item of material or equipment will be considered by Engineer as a substitute or "or-equal" unless written request for approval has been submitted by Bidder and has been received by Engineer ~~at least 15 days prior to the date for receipt of Bids~~ prior to the deadline for questions. Each such request shall conform to the requirements of Paragraph 6.05 of the General Conditions. The burden of proof of the merit of the proposed item is upon Bidder. Engineer's decision of approval or disapproval of a proposed item will be final. If Engineer approves any proposed item, such approval will be set forth in an Addendum issued to all prospective Bidders. Bidders shall not rely upon approvals made in any other manner**.**

ARTICLE 12 – SUBCONTRACTORS, SUPPLIERS AND OTHERS

12.01 If the Supplementary Conditions require the identity of certain Subcontractors, Suppliers, individuals, or entities to be submitted to Owner in advance of a specified date prior to the Effective Date of the Agreement, the apparent Successful Bidder, and any other Bidder so requested, shall within ~~five~~ three days after Bid opening, submit to Owner a list of all such Subcontractors, Suppliers, individuals, or entities proposed for those portions of the Work for which such identification is required. Such list shall be accompanied by an experience statement with pertinent information regarding similar projects and other evidence of qualification for each such Subcontractor, Supplier, individual, or entity if requested by Owner. If Owner or Engineer, after due investigation, has reasonable objection to any proposed Subcontractor, Supplier, individual, or entity, Owner may, before the Notice of Award is given, request apparent Successful Bidder to submit a substitute, in which case apparent Successful Bidder shall submit an acceptable substitute, Bidder's Bid price will be increased or decreased by the difference in cost occasioned by such substitution, and Owner may consider such price adjustment in evaluating Bids and making the Contract award.

12.02 If apparent Successful Bidder declines to make any such substitution, Owner may award the Contract to the next lowest Bidder that proposes to use acceptable Subcontractors, Suppliers, individuals, or entities. Declining to make requested substitutions will not

Copyright © 2007 National Society of Professional Engineers for EJCDC. All rights reserved.

constitute grounds for forfeiture of the Bid security of any Bidder. Any Subcontractor, Supplier, individual, or entity so listed and against which Owner or Engineer makes no written objection prior to the giving of the Notice of Award will be deemed acceptable to Owner and Engineer subject to revocation of such acceptance after the Effective Date of the Agreement as provided in Paragraph 6.06 of the General Conditions.

12.03 Contractor shall not be required to employ any Subcontractor, Supplier, individual, or entity against whom Contractor has reasonable objection.

ARTICLE 13 – PREPARATION OF BID

13.01 The Bid Form is included with the Bidding Documents. Additional copies may be obtained from Engineer.

13.02 All blanks on the Bid Form shall be completed in ink and the Bid Form signed in ink. Erasures or alterations shall be initialed in ink by the person signing the Bid Form. A Bid price shall be indicated for each unit price item listed therein. ~~In the case of optional alternatives the words "No Bid," "No Change," or "Not Applicable" may be entered~~.

13.03 A Bid by a corporation shall be executed in the corporate name by the president or a vice-president or other corporate officer accompanied by evidence of authority to sign. The corporate seal shall be affixed and attested by the secretary or an assistant secretary. The corporate address and state of incorporation shall be shown.

13.04 A Bid by a partnership shall be executed in the partnership name and signed by a partner (whose title must appear under the signature), accompanied by evidence of authority to sign. The official address of the partnership shall be shown.

13.05 A Bid by a limited liability company shall be executed in the name of the firm by a member and accompanied by evidence of authority to sign. The state of formation of the firm and the official address of the firm shall be shown.

13.06 A Bid by an individual shall show the Bidder's name and official address.

13.07 A Bid by a joint venture shall be executed by each joint venturer in the manner indicated on the Bid Form. The official address of the joint venture shall be shown.

13.08 All names shall be printed in ink below the signatures**.**

13.09 The Bid shall contain an acknowledgment of receipt of all Addenda, the numbers of which shall be filled in on the Bid Form.

13.10 Postal and e-mail addresses and telephone number for communications regarding the Bid shall be shown.

13.11 The Bid shall contain evidence of Bidder's authority and qualification to do business in the state where the Project is located, or Bidder shall covenant in writing to obtain such authority and qualification prior to award of the Contract and attach such covenant to the

Copyright © 2007 National Society of Professional Engineers for EJCDC. All rights reserved.

Bid. Bidder's state contractor license number, if any, shall also be shown on the Bid Form.

ARTICLE 14 – BASIS OF BID; COMPARISON OF BIDS

14.01 *Unit Price*

A. Bidders shall submit a Bid on a unit price basis for each item of Work listed in the Bid schedule.

B. The total of all estimated prices will be the sum of the products of the estimated quantity of each item and the corresponding unit price. The final quantities and Contract Price will be determined in accordance with Paragraph 11.03 of the General Conditions.

C. Discrepancies between the multiplication of units of Work and unit prices will be resolved in favor of the unit prices. Discrepancies between the indicated sum of any column of figures and the correct sum thereof will be resolved in favor of the correct sum.

14.02 *Allowances*

~~A. For cash allowances the Bid price shall include such amounts as the Bidder deems proper for Contractor's overhead, costs, profit, and other expenses on account of cash allowances, if any, named in the Contract Documents, in accordance with Paragraph 11.02.B of the General Conditions~~

A. Cash allowances provided on the Bid Form, if any, are provided with an estimated dollar amount determined by owner, for the purpose of covering anticipated potential costs which owner does not expect bidders to know at the time of bidding.

1. Bidder shall include, in the Unit Price for other items of Work, all costs not specifically defined in the Contract Documents as being covered by the cash allowance.

2. Bidder is not responsible for estimating the cost of Work to be paid for by cash allowance.

ARTICLE 15 – SUBMITTAL OF BID

15.01 With each copy of the Bidding Documents, a Bidder is furnished one separate unbound copy of the Bid Form, and, if required, the Bid Bond Form. The unbound copy of the Bid Form is to be completed and submitted with the Bid security ~~and the following documents:~~

15.02 A Bid shall be submitted no later than the date and time prescribed and at the place indicated in the advertisement or invitation to bid and shall be enclosed in a plainly marked package with the Project title (and, if applicable, the designated portion of the

Copyright © 2007 National Society of Professional Engineers for EJCDC. All rights reserved.

Project for which the Bid is submitted), the name and address of Bidder, and shall be accompanied by the Bid security and other required documents. If a Bid is sent by mail or other delivery system, the sealed envelope containing the Bid shall be enclosed in a separate package plainly marked on the outside with the notation "BID ENCLOSED." A mailed Bid shall be addressed to the address identified on the Advertisement for Bids.

ARTICLE 16 – MODIFICATION AND WITHDRAWAL OF BID

16.01 A Bid may be modified or withdrawn by an appropriate document duly executed in the same manner that a Bid must be executed and delivered to the place where Bids are to be submitted prior to the date and time for the opening of Bids.

16.02 If within 24 hours after Bids are opened any Bidder files a duly signed written notice with Owner and promptly thereafter demonstrates to the reasonable satisfaction of Owner that there was a material and substantial mistake in the preparation of its Bid, that Bidder may withdraw its Bid, and the Bid security will be returned. Thereafter, if the Work is rebid, that Bidder will be disqualified from further bidding on the Work.

ARTICLE 17 – OPENING OF BIDS

17.01 Bids will be opened at the time and place indicated in the Advertisement or Invitation to Bid and, unless obviously non-responsive, read aloud publicly. ~~An abstract of the amounts of the base Bids and major alternates, if any, will be made available to Bidders after the opening of Bids.~~ A tabulation of all bids showing each of the bid unit prices will be made available to Bidders with 14 days after the opening of bids.

ARTICLE 18 – BIDS TO REMAIN SUBJECT TO ACCEPTANCE

18.01 All Bids will remain subject to acceptance for the period of time stated in the Bid Form, but Owner may, in its sole discretion, release any Bid and return the Bid security prior to the end of this period.

ARTICLE 19 – EVALUATION OF BIDS AND AWARD OF CONTRACT

19.01 Owner reserves the right to reject any or all Bids, including without limitation, nonconforming, nonresponsive, unbalanced, or conditional Bids. Owner further reserves the right to reject the Bid of any Bidder whom it finds, after reasonable inquiry and evaluation, to not be responsible. Owner may also reject the Bid of any Bidder if Owner believes that it would not be in the best interest of the Project to make an award to that Bidder. Owner also reserves the right to waive all informalities not involving price, time, or changes in the Work and to negotiate contract terms with the Successful Bidder.

19.02 More than one Bid for the same Work from an individual or entity under the same or different names will not be considered. Reasonable grounds for believing that any Bidder has an interest in more than one Bid for the Work may be cause for disqualification of that Bidder and the rejection of all Bids in which that Bidder has an interest.

Copyright © 2007 National Society of Professional Engineers for EJCDC. All rights reserved.

19.03 In evaluating Bids, Owner will consider whether or not the Bids comply with the prescribed requirements, and such alternates, unit prices and other data, as may be requested in the Bid Form or prior to the Notice of Award.

19.04 In evaluating Bidders, Owner will consider the qualifications of Bidders and may consider the qualifications and experience of Subcontractors, Suppliers, and other individuals or entities proposed for those portions of the Work for which the identity of Subcontractors, Suppliers, and other individuals or entities must be submitted as provided in the Supplementary Conditions.

19.05 Owner may conduct such investigations as Owner deems necessary to establish the responsibility, qualifications, and financial ability of Bidders, proposed Subcontractors, Suppliers, individuals, or entities proposed for those portions of the Work in accordance with the Contract Documents.

19.06 If the Contract is to be awarded, Owner will award the Contract to the Bidder whose Bid is in the best interests of the Project.

ARTICLE 20 – CONTRACT SECURITY AND INSURANCE

20.01 Article 5 of the General Conditions, as may be modified by the Supplementary Conditions, sets forth Owner's requirements as to performance and payment bonds and insurance. When the Successful Bidder delivers the executed Agreement to Owner, it shall be accompanied by such bonds.

ARTICLE 21 – SIGNING OF AGREEMENT

21.01 When Owner issues a Notice of Award to the Successful Bidder, it shall be accompanied by the required number of unsigned counterparts of the Agreement along with the other Contract Documents which are identified in the Agreement as attached thereto. Within 15 days thereafter, Successful Bidder shall sign and deliver the required number of counterparts of the Agreement and attached documents to Owner. Within ten days thereafter, Owner shall deliver one fully signed counterpart to Successful Bidder with a complete set of the Drawings with appropriate identification.

Copyright © 2007 National Society of Professional Engineers for EJCDC. All rights reserved.

ARTICLE 22 – WAGE AND LABOR REQUIREMENTS, DEBARMENT CERTIFICIATION, AND DISADVANTAGED BUSINESS ENTERPRISE (DBE) REQUIREMENTS

22.01 Davis-Bacon Act Prevailing Wages are required for the Work on the Contract(s) Awarded as part of this Project. The Wage decisions in effect for this project are included in Appendix A-1 of the Contract Documents and Specifications.

22.02 Federal Labor Standard Provisions for Federally Assisted Projects are in effect for the Contract(s) Awarded as part of this Project. These provisions are included in Appendix A-2 of the Contract Documents and Specifications.

22.03 Bidders shall furnish a signed Certification Regarding Debarment, Suspension, and Other Responsibility Matters as shown in Appendix A-2.

22.04 Disadvantaged Business Enterprises (DBE's) must have an opportunity to participate in the Project. In order to ensure DBE's are given this opportunity, Prime Contractors shall follow the procedures outlined in Appendix A-2 of the Contract Documents and Specifications.

A. Frequently asked questions regarding DBE Solicitation are included in Appendix A-3.

ARTICLE 23 – AMERICAN IRON AND STEEL REQUIREMENTS

23.01 The State Revolving Loan Fund requires compliance with American Iron and Steel (AIS) requirements. This stipulates all iron and steel products will be or have been produced in the United States in a manner that complies with AIS requirements, unless a waiver or other determination has been made by the State of Michigan in writing that the requirements do not apply to the project or certain of its components.

23.02 Detailed and Complete AIS Contract Language is included in Appendix B of the Contract Documents and Specifications. Submittal of a bid for one or all of the Contacts as part of this project hereby represents and warrants to the Owner and the State of Michigan, that the Contractor has reviewed and understands the AIS Requirements.

END OF DOCUMENT

Copyright © 2007 National Society of Professional Engineers for EJCDC. All rights reserved.

DOCUMENT 00 41 43

BID FORM

TABLE OF CONTENTS

Page

Article 1 – Bid Recipient....1

Article 2 – Bidder's Acknowledgements....1

Article 3 – Bidder's Representations....1

Article 4 – Bidder's Certification....2

Article 5 – Basis of Bid....3

Article 6 – Time of Completion....9

Article 7 – Attachments to This Bid....24

Article 8 – Defined Terms....24

Article 9 – Bid Submittal....24

Copyright © 2007 National Society of Professional Engineers for EJCDC. All rights reserved.

ARTICLE 1 - BID RECIPIENT

1.01 This Bid is submitted to:

City of South Haven, 1199 8th Avenue, South Haven MI 49090

1.02 The undersigned Bidder proposes and agrees, if this Bid is accepted, to enter into an Agreement with Owner in the form included in the Bidding Documents to perform all Work as specified or indicated in the Bidding Documents for the prices and within the times indicated in this Bid and in accordance with the other terms and conditions of the Bidding Documents.

ARTICLE 2 - BIDDER'S ACKNOWLEDGEMENTS

2.01 Bidder accepts all of the terms and conditions of the Instructions to Bidders, including without limitation those dealing with the disposition of Bid security. This Bid will remain subject to acceptance for 75 days after the Bid opening, or for such longer period of time that Bidder may agree to in writing upon request of Owner.

ARTICLE 3 - BIDDER'S REPRESENTATIONS

3.01 In submitting this Bid, Bidder represents that:

A. Bidder has examined and carefully studied the Bidding Documents, other related data identified in the Bidding Documents, and the following Addenda, receipt of which is hereby acknowledged:

Addendum No.	Addendum Date
_____	_____
_____	_____
_____	_____

B. Bidder has visited the Site and become familiar with and is satisfied as to the general, local, and Site conditions that may affect cost, progress, and performance of the Work.

C. Bidder is familiar with and is satisfied as to all Laws and Regulations that may affect cost, progress, and performance of the Work.

D. Bidder has carefully studied all: (1) reports of explorations and tests of subsurface conditions at or contiguous to the Site and all drawings of physical conditions relating to existing surface or subsurface structures at the Site (except Underground Facilities) that have been identified in SC-4.02 as containing reliable "technical data," and (2) reports and drawings of Hazardous Environmental Conditions, if any, at the Site that have been identified in SC-4.06 as containing reliable "technical data."

E. Bidder has considered the information known to Bidder; information commonly known to contractors doing business in the locality of the Site; information and observations obtained

Copyright © 2007 National Society of Professional Engineers for EJCDC. All rights reserved.

from visits to the Site; the Bidding Documents; and the Site-related reports and drawings identified in the Bidding Documents, with respect to the effect of such information, observations, and documents on (1) the cost, progress, and performance of the Work; (2) the means, methods, techniques, sequences, and procedures of construction to be employed by Bidder, including applying the specific means, methods, techniques, sequences, and procedures of construction expressly required by the Bidding Documents; and (3) Bidder's safety precautions and programs.

F. Based on the information and observations referred to in Paragraph 3.01.E above, Bidder does not consider that further examinations, investigations, explorations, tests, studies, or data are necessary for the determination of this Bid for performance of the Work at the price(s) bid and within the times required, and in accordance with the other terms and conditions of the Bidding Documents.

G. Bidder is aware of the general nature of work to be performed by Owner and others at the Site that relates to the Work as indicated in the Bidding Documents.

H. Bidder has given Engineer written notice of all conflicts, errors, ambiguities, or discrepancies that Bidder has discovered in the Bidding Documents, and the written resolution thereof by Engineer is acceptable to Bidder.

I. The Bidding Documents are generally sufficient to indicate and convey understanding of all terms and conditions for the performance of the Work for which this Bid is submitted.

ARTICLE 4 - BIDDER'S CERTIFICATION

4.01 Bidder certifies that:

A. This Bid is genuine and not made in the interest of or on behalf of any undisclosed individual or entity and is not submitted in conformity with any collusive agreement or rules of any group, association, organization, or corporation;

B. Bidder has not directly or indirectly induced or solicited any other Bidder to submit a false or sham Bid;

C. Bidder has not solicited or induced any individual or entity to refrain from bidding; and

D. Bidder has not engaged in corrupt, fraudulent, collusive, or coercive practices in competing for the Contract. For the purposes of this Paragraph 4.01.D:

1. "corrupt practice" means the offering, giving, receiving, or soliciting of any thing of value likely to influence the action of a public official in the bidding process;

2. "fraudulent practice" means an intentional misrepresentation of facts made (a) to influence the bidding process to the detriment of Owner, (b) to establish bid prices at artificial non-competitive levels, or (c) to deprive Owner of the benefits of free and open competition;

Copyright © 2007 National Society of Professional Engineers for EJCDC. All rights reserved.

3. "collusive practice" means a scheme or arrangement between two or more Bidders, with or without the knowledge of Owner, a purpose of which is to establish bid prices at artificial, non-competitive levels; and

4. "coercive practice" means harming or threatening to harm, directly or indirectly, persons or their property to influence their participation in the bidding process or affect the execution of the Contract.

ARTICLE 5 - BASIS OF BID

5.01 Bidder will complete the Work in accordance with the Contract Documents for the following price(s):

Contract #1 – North Shore Drive Reconstruction Project

Item No.	Spec Reference	Pay Item	Qty	Units	Unit Price	Amount
1	01 10 00	Mobilization, Max $200,000	1	Lump Sum		
2	Varies	Newcome Beach Staircase	1	Lump Sum		
3	01 50 00	Temporary Traffic Control	1	Lump Sum		
4	01 50 00	Maintenance Gravel	600	Cyd		
5	10 14 53	Post, Steel, U-Channel, 3 lb	42	Ea		
6	10 14 53	Traffic Signs, Permanent	263	Sft		
7	10 14 53	Sign, Type III, Erect, Salv	2	Ea		
8	31 10 00	Tree, Rem., 6 inch to 18 inch	20	Ea		
9	31 10 00	Tree, Rem., 19 inch to 36 inch	10	Ea		
10	31 10 00	Tree, Rem, 37 inch or Larger	1	Ea		
11	31 10 00	HMA Surface, Rem.	19,467	Syd		
12	31 10 00	Pavt., Rem.	11,519	Syd		
13	31 10 00	Sidewalk, Rem.	5,265	Syd		
14	31 10 00	Curb & Gutter, Rem.	9,540	Ft.		
15	31 10 00	Utility Line, Rem., Sanitary	1,310	Ft.		
16	31 10 00	Utility Line, Rem., Storm	2,790	Ft.		

Copyright © 2007 National Society of Professional Engineers for EJCDC. All rights reserved.

17	31 10 00	Utility Str., Rem., Sanitary	23	Ea		
18	31 10 00	Utility Str., Rem., Storm	25	Ea		
19	31 10 00	Sign, Rem.	33	Ea		
20	31 10 00	Newcome Beach Staircase Removal	1	Lump Sum		
21	31 22 13	Roadway Grading	51.25	Sta		
22	31 22 13	Subgrade Undercutting, Type, II	600	Cyd		
23	31 23 23	Fill Abandoned Utility, 6 inch	4,450	Ft.		
24	31 25 00	Silt Fence	1,000	Ft.		
25	31 25 00	Inlet Protection, Fabric Drop	75	Ea		
26	31 25 00	Rip Rap, Heavy	85	Cyd		
27	32 01 16	Structure Cover, Adjust, Case 2	4	Ea		
28	32 01 16	Cold Milling HMA Surface	3,610	Syd		
29	32 11 16	Subbase, CIP	7,810	Cyd		
30	32 11 23	Aggregate Base, 21AA, 8 inch	23,385	Syd		
31	32 12 16	HMA, 4E3	4,423	Ton		
32	32 12 16	HMA, 5E3	2,120	Ton		
33	32 13 13	Sidewalk, 4 inch	33,920	Sft		
34	32 13 13	Sidewalk Ramp, 6 inch	2,605	Sft		
35	32 13 13	Detectable Warning Surface, Cast Iron	165	Ft.		
36	32 13 13	Curb & Gutter, Conc., Det F4	9,410	Ft.		
37	32 13 13	Driveway Opening, Conc., Det M	505	Ft.		
38	32 13 13	Driveway, Nonreinf. Conc., 6 inch	3,225	Syd		
39	32 13 13	Conc. Pavt., Nonreinf., 6 inch	65	Syd		
40	32 17 23	Pavt. Mrkg, Waterborne, 4 inch, White	5,240	Ft.		
41	32 17 23	Pavt. Mrkg, Waterborne, 4 inch, Yellow	8,400	Ft.		

Copyright © 2007 National Society of Professional Engineers for EJCDC. All rights reserved.

42	32 17 23	Pavt. Mrkg., Ovly. Cold Plastic, 24 inch, Stop Bar	167	Ft.		
43	32 17 23	Pavt. Mrkg., Ovly. Cold Plastic, 12 inch, Crosswalk	1,560	Ft.		
44	32 17 23	Pavt. Mrkg., Ovly. Cold Plastic, Thru Arrow Sym.	6	Ea		
45	32 91 19	Topsoil Surface, 4 inch, screened	7,500	Syd		
46	32 91 19	Acer freemanii 'Jeffersred' 3" BB	9	Ea		
47	32 91 19	Ginko biloba 'Princeton Sentry' 3 inch BB	7	Ea		
48	32 91 19	Gleditsia T. 'Street Keeper', 3 inch BB	7	Ea		
49	32 91 19	Zelkova Seratta 'JFS-KW1', 2 inch BB	8	Ea		
50	32 91 19	Amelanchier x grandifolia 'Autumn Brilliance', 2 inch BB	9	Ea		
51	32 91 19	Carpinus betulus 'Fastigiata', 2 inch	8	Ea		
52	32 91 19	Crataegus C Inermis 'Cruzam', 2 inch BB	8	Ea		
53	32 91 19	Prunus S. 'Kwanzan', 2 inch BB	7	Ea		
54	32 91 19	Pyrus C. 'Aristocrat', 2 inch BB	11	Ea		
55	32 91 19	Ammophila Breviligulata	347	Ea		
56	32 91 19	Cornus alba 'Siberica Bloodgood', #5 cont.	7	Ea		
57	32 91 19	Echinacea purpurpea 'Magnus', #2 cont.	10	Ea		
58	32 91 19	Pennisetum alopecuroides 'Hameln', 3 inch pot	3	Ea		
59	32 91 19	Perovskia atriplicifolia 'Little Spire', #2 cont.	6	Ea		
60	32 91 19	Rudbeckia fuldiga 'Goldsturm', #2 cont.	5	Ea		
61	32 91 19	Beach Sand	20	Cyd		
62	32 92 19	Bike Rack	11	Ea		
63	32 92 19	Trash Receptacle	4	Ea		
64	32 92 19	Aluminum Edging	45	Ft.		
65	32 92 19	Entrance Signage, Installed	3	Ea		
66	32 92 19	Seed & Fertilizer	7,500	Syd		

Copyright © 2007 National Society of Professional Engineers for EJCDC. All rights reserved.

67	32 92 19	Mulch Blanket	7,500	Syd		
68	32 92 19	Mulch Blanket, High Velocity	400	Syd		
69	33 05 13	Structure, San. MH, 48 inch Dia.	17	Ea		
70	33 05 13	Structure, Stm. MH, 48 inch Dia.	28	Ea		
71	33 05 13	Structure, Stm. MH, 60 inch Dia.	7	Ea		
72	33 05 13	Structure, Stm. CB, 24 inch Dia.	62	Ea		
73	33 05 13	Structure, Stm. CB, 48 inch Dia.	2	Ea		
74	33 05 13	Structure, Conn. to Ex. Sewer, 48 inch	2	Ea		
75	33 05 13	Structure Cover, EJ #1040 Logo San	19	Ea		
76	33 05 13	Structure Cover, EJ #1040 Logo Stm	35	Ea		
77	33 05 13	Structure Cover, EJ #5100	7	Ea		
78	33 05 13	Structure Cover, EJ #7045	60	Ea		
79	33 05 13	Structure Cover, EJ #6496	1	Ea		
80	33 05 13	Structure, Stm. Leaching MH, 72 inch Dia.	1	Ea		
81	33 05 13	Structure Tap, 8 inch, Sanitary	3	Ea		
82	33 05 13	Structure, Inside Drop	1	Ea		
83	33 11 13	Water main, 6 inch	100	Ft.		
84	33 11 13	Water main, 8 inch	305	Ft.		
85	33 11 13	Hydrant Assembly	3	Ea		
86	33 11 13	Hydrant Lead, 6 inch	30	Ft.		
87	33 11 13	Live Tap, 12 inch x 8 inch	3	Ea		
88	33 11 13	Live Tap, 12 inch x 6 inch	1	Ea		
89	33 12 13	Water Service, 1 inch	3,395	Ft.		
90	33 12 13	Curb Stop, 1 inch	53	Ea		
91	33 31 13	San. Sewer, PVC SDR 26, 8 inch	4,880	Ft.		

Copyright © 2007 National Society of Professional Engineers for EJCDC. All rights reserved.

92	33 31 13	San. Sewer Service, 6 inch	4,501	Ft.		
93	33 31 13	San. Sewer Service Cleanout	130	Ea		
94	33 31 13	Cleanout Riser Cover	31	Ea		
95	33 41 13	Stm. Sewer, RCP, 12 inch	2,504	Ft.		
96	33 41 13	Stm. Sewer, RCP, 18 inch	2,601	Ft.		
97	33 41 13	Stm. Sewer, RCP, 24 inch	801	Ft.		
98	33 41 13	Stm. Sewer, DI, 24 inch	85	Ft.		
99	33 41 13	Tapered End Section, Conc., 24 inch	1	Ea		
100	33 41 13	Stm. Sewer Service, 6 inch	961	Ft.		
101	33 41 13	Stm. Sewer Service, Cleanout	50	Ea		
102	33 46 16	Underdrain, Subbase, 6 inch	9,200	Ft.		

Contact #1: Total of All Bid Prices_____

Copyright © 2007 National Society of Professional Engineers for EJCDC. All rights reserved.

Contract #2A – Monroe Boulevard and Indian Grove Lift Station Reconstruction Project

Item No.	Spec Reference	Pay Item	Qty	Units	Unit Price	Amount
1	01 10 00	Mobilization, Max 7%	1	LS		
2	01 50 00	Temporary Traffic Control	1	LS		
3	01 50 00	Maintenance Gravel, 22A	500	Cyd		
4	02 41 16	Demolished Materials	1	LS		
5	10 14 53	Traffic Signs, Permanent	194	Sft		
6	10 14 53	Post, Steel, 3 Lb	43	Ea		
7	10 14 53	Post Hole through Concrete	2	Ea		
8	10 14 53	Sign, Type III, Erect, Salv	10	Ea		
9	31 23 33	Exploratory Excavation	150	Cyd		
10	31 10 00	Tree, Rem., 6 inch to 18 inch	9	Ea		
11	31 10 00	Tree, Rem., 19 inch to 36 inch	14	Ea		
12	31 10 00	Tree, Rem., 37 inch or Larger	1	Ea		
13	31 10 00	HMA Surface, Rem.	9430	Syd		
14	31 10 00	Pavt., Rem.	555	Syd		
15	31 10 00	Sidewalk, Rem.	15	Syd		
16	31 10 00	Curb, Rem.	25	Ft		
17	31 10 00	Curb & Gutter, Rem.	360	Ft		
18	31 10 00	Utility Line, Rem., Sanitary	445	Ft		
19	31 10 00	Utility Line, Rem., Storm	1075	Ft		
20	31 10 00	Utility Line, Rem., Water	20	Ft		
21	31 10 00	Utility Str., Rem., Sanitary	2	Ft		
22	31 10 00	Utility Str., Rem., Storm	6	Ft		
23	31 10 00	Sign, Rem.	10	Ea		

Copyright © 2007 National Society of Professional Engineers for EJCDC. All rights reserved.

24	31 10 00	Post, Mailbox	26	Ea		
25	31 10 00	Guardrail, Rem.	90	Ft		
26	31 10 00	Light Pole, Rem. & Salv	1	Ea		
27	31 10 00	Retaining Wall, Rem.	125	Ft		
28	31 10 00	Roadway Grading	26.5	Sta		
29	31 22 13	Site Grading	1	LS		
30	31 22 13	Subgrade Undercutting, Type, II	250	Cyd		
31	31 23 24	Fill Abandoned Utility, 6 inch	1615	Ft		
32	31 23 24	Flowable Fill	5.5	Cyd		
33	31 25 13	Silt Fence	610	Ft		
34	32 11 16	Subbase, CIP	4150	Cyd		
35	32 11 16	Conc Base Cse, Nonreinf, 7 1/2 inch	11	Syd		
36	32 11 23	Aggregate Base, 22A, 8 inch	11700	Syd		
37	32 11 23	Aluminum Edging	120	Ft		
38	32 11 23	Bollard, Steel	9	Ea		
39	32 12 16	HMA, 4E3	2551	Ton		
40	32 12 16	HMA, 5E3	986	Ton		
41	32 12 16	Hand Patching	22	Tons		
42	32 13 13	Sidewalk, 4 inch	11550	Sft		
43	32 13 13	Sidewalk Ramp, 6 inch	1375	Sft		
44	32 13 13	Detectable Warning Surface, Cast Iron	90	Ft		
45	32 13 13	Curb & Gutter, Conc., Det F4	5465	Ft		
46	32 13 13	Curb, Det E4	110	Ft		
47	32 13 13	Driveway Opening, Conc., Det M	80	Ft		
48	32 13 13	Driveway, Nonreinf. Conc., 6 inch	1165	Syd		

Copyright © 2007 National Society of Professional Engineers for EJCDC. All rights reserved.

49	32 13 13	Conc. Pavt., Reinf., 6 inch	20	Syd		
50	32 17 23	Pavt. Mrkg., Waterborne, 6 inch, White	4275	Ft		
51	32 17 23	Pavt. Mrkg., Waterborne, 4 inch, Yellow	4890	Ea		
52	32 17 23	Pavt. Mrkg., Ovly. Cold Plastic, 6 inch, Crosswalk	255	Ft		
53	32 17 23	Pavt. Mrkg., Ovly. Cold Plastic, 12 inch, Crosswalk	330	Syd		
54	32 17 23	Pavt. Mrkg., Ovly. Cold Plastic, 24 inch, Stop Bar	35	Syd		
55	32 91 19	Topsoil Surface, 4 inch, screened	5615	Syd		
56	32 91 19	Acer freemanii 'Jeffersred', 3 inch	2	Ea		
57	32 91 19	Carpinus betulus ;Fastigiata', 2 inch	2	Ea		
58	32 91 19	Cornus racemosa, #5 cont.	3	Ea		
59	32 91 19	Crataegus c. Inermis 'Cruzam', 2 inch	1	Ea		
60	32 91 19	Fagus sylvatica, 2 inch	3	Ea		
61	32 91 19	Ginko biloba 'Princeton Sentry', 2 inch	2	Ea		
62	32 91 19	Gleditsia t. 'Street Keeper', 2 inch	2	Ea		
63	32 91 19	Hamamelis x iintermedia 'Copper Glow', #5 cont.	3	Ea		
64	32 91 19	Hydrangea quercifolia, #5 cont.	14	Ea		
65	32 91 19	Pinus strobus, 8 foot	1	Ea		
66	32 91 19	Prunus s. 'Kwanzan', 2 inch	1	Ea		
67	32 91 19	Pyrus c. 'Aristocrat', 2 inch	2	Ea		
68	32 91 19	Quercus rubra, 3 inch	2	Ea		
69	32 91 19	Taxus x media 'Hicksii', #5 cont.	4	Ea		
70	32 91 19	Viburnum acerifolium, #5 cont.	8	Ea		
71	32 92 19	Seed & Fertilizer	5615	Syd		
72	32 92 19	Mulch Blanket	5615	Syd		
73	33 05 14	Structure, San. MH, 48 inch Dia	5	Ea		

Copyright © 2007 National Society of Professional Engineers for EJCDC. All rights reserved.

74	33 05 14	Structure, Stm. MH, 48 inch Dia	2	Ea		
75	33 05 14	Structure, Stm. CB, 24 inch Dia	12	Ea		
76	33 05 14	Structure, Stm. CB, 48 inch Dia	13	Ea		
77	33 05 14	Structure Cover, EJ #7030	2	Ea		
78	33 05 14	Structure Cover, EJ #1040 Logo San	5	Ea		
79	33 05 14	Structure Cover, EJ #1040 Logo Stm	2	Ea		
80	33 05 14	Structure Cover, EJ #7045	21	Ea		
81	33 05 14	Structure Cover, EJ #1040, Type M1	2	Ea		
82	33 05 14	Structure Cover, Adjust, Case 1	14	Ea		
83	33 05 14	Structure Tap, 8 inch, Sanitary	1	Ea		
84	33 05 14	Structure, Conn. to Ex. Sewer, 8 inch	1	Ea		
85	33 05 14	Structure Tap, 18 inch, Storm	3	Ea		
86	33 11 13	Water Main, 8 inch	60	Ft		
87	33 11 13	Water Main, 12 inch	1445	Ft		
88	33 11 13	Water Main, 14 inch, HDD	215	Ft		
89	33 11 13	Valve & Box, 8 inch	1	Ea		
90	33 11 13	Valve & Box, 12 inch	5	Ea		
91	33 11 13	Hydrant Assembly	5	Ea		
92	33 11 13	Hydrant Lead, 6 inch	160	Ft		
93	33 11 13	Live Tap, 12 inch x 12 inch	1	Ea		
94	33 11 13	Line Stop, 6 inch	1	Ea		
95	33 11 13	Line Stop, 8 inch	1	Ea		
96	33 12 13	Water Service, 1 inch	503	Ft		
97	33 12 13	Curb Stop, 1 inch	16	Ea		
98	33 12 13	Meter Pit, 1 inch	16	Ea		

Copyright © 2007 National Society of Professional Engineers for EJCDC. All rights reserved.

99	33 31 13	San. Sewer, PVC SDR 26, 8 inch	920	Ea		
100	33 31 13	San. Sewer Service, 6 inch	333	Ft		
101	33 31 13	San. Sewer Service, Cleanout	4	Ea		
102	33 31 13	Sewer Bypass Pumping	1	LS		
103	33 32 19	San. Lift Station, Indian Grove, Electrical and Controls	1	LS		
104	33 32 19	San. Lift Station, Indian Grove, Rehabilitation	1	LS		
105	33 32 19	San. Lift Station, Indian Grove, Superstructure Replacement	1	LS		
106	33 32 19	Emergency Standby Generator, 85 kW	1	Ea		
107	33 32 19	Emergency Standby Generator, ATS, 85 kW	1	Ea		
108	33 34 00	Force Main, HDPE, 12 inch	1285	Ft		
109	33 34 00	Force Main, DI, 12 inch	50	Ft		
110	33 34 00	Forcemain Cleanout Manhole	1	Ea		
111	33 34 00	Force Main Air Release MH	2	Ea		
112	33 41 13	Stm. Sewer, RCP, 12 inch	1170	Ft		
113	33 41 13	Stm. Sewer, RCP, 18 inch	1790	Ft		
114	33 41 13	Stm. Sewer, PVC, 4 inch	20	Ft		
115	33 41 13	Trench Drain, 4 inch	20	Ft		
116	33 41 13	Stm. Sewer Service, 6 inch	22	Ft		
117	33 41 13	Stm. Swr. Service Cleanout	1	Ea		
118	03 30 00	Conc, Grade S2	5	Cyd		
119	03 30 00	Reinforcement, Steel, Culv and Headwall	125	Lbs		
120	03 30 00	Joint Waterproofing	75	Sft		
121	33 46 00	Underdrain, Subgrade, 6 inch	5465	Ft		
	34 71 13	Guardrail, Type B	40	Ft		
	34 71 13	Guardrail Approach Terminal, Type 1B	2	Ea		

Copyright © 2007 National Society of Professional Engineers for EJCDC. All rights reserved.

34 71 13	Guardrail Departing Terminal, Type B	2	Ea		
34 71 13	Guardrail Reflector	9	Ea		
26 56 00	Light Pole, Erect Salv.	1	Ea		

Contract #2A: Total of All Bid Prices_____

Copyright © 2007 National Society of Professional Engineers for EJCDC. All rights reserved.

Contract #2B – Kalamazoo Street Reconstruction – Phase IV

Item No.	Spec Reference	Pay Item	Qty	Units	Unit Price	Amount
1	01 10 00	Mobilization, Max $45,000	1	Lump Sum		
2	01 50 00	Temporary Traffic Control	1	Lump Sum		
3	01 50 00	Maintenance Gravel, 22A	1,250	Cu. Yd.		
4	01 50 00	Maintenance Gravel, 21AA	500	Cu. Yd.		
5	10 14 53	Traffic Signs, Permanent	55	Sq. Ft..		
6	10 14 53	Post, Steel, 3lb	5	Each		
7	31 10 00	HMA Surface, Rem.	6,930	Sq. Yd.		
8	31 10 00	Sidewalk, Rem.	6	Sq. Yd.		
9	31 10 00	Curb & Gutter, Rem	2,109	Ft..		
10	31 10 00	Utility Line, Rem., Water	369	Ft..		
11	31 10 00	Utility Line, Rem., Storm	200	Ft..		
12	31 10 00	Utility Line, Rem., Sanitary	151	Ft..		
13	31 10 00	Utility Line, Rem., Forcemain	25	Ft..		
14	31 10 00	Utility Str., Rem, Water	3	Each		
15	31 10 00	Utility Str., Rem, Storm	5	Each		
16	31 10 00	Utility Str., Rem, Sanitary	3	Each		
17	31 10 00	Sign, Rem.	6	Each		
18	31 22 13	Roadway Grading	15.5	Station		
19	31 23 23.33	Fill Abandoned Utility, 10 inch	1,280	Ft..		
20	31 23 33	Exploratory Excavation	30	Cu. Yd.		
21	31 25 00	Inlet Protection, Fabric Drop	17	Each		
22	31 25 00	Aggregate Cover, 12 inch	1,050	Sq. Yd.		
23	32 01 16	Structure Cover, Adjust, Case 2	15	Each		

Copyright © 2007 National Society of Professional Engineers for EJCDC. All rights reserved.

24	32 11 16	Subbase, CIP	2,045	Cu. Yd.		
25	33 11 23	Aggregate Base, 21AA, 8 inch	6,158	Sq. Yd.		
26	32 12 16	HMA, 5E3	710	Ton		
27	32 12 16	HMA, 4E3	1,066	Ton		
28	32 12 16	Hand Patching	83	Ton		
29	32 13 13	Sidewalk, 4 inch	57	Sq. Ft..		
30	32 13 13	Sidewalk, 8 inch	1,247	Sq. Ft..		
31	32 13 13	Curb & Gutter, Conc., Det. F4	1,635	Ft..		
32	32 13 13	Driveway Opening, Conc., Det M	491	Ft..		
33	32 13 13	Driveway, Nonreinf. Conc., 8 inch	218	Sq. Yd.		
34	32 17 23	Pavt. Mrkg., Ovly. Cold Plastic, 24 inch, Stopbar	36	Ft..		
35	32 17 23	Pavt. Mrkg., Waterborne, 4 Inch, Yellow	390	Ft..		
36	32 91 19	Topsoil Surface, 4 inch, Screened	2,682	Sq. Yd.		
37	32 92 19	Seed & Fertilizer	2,682	Sq. Yd.		
38	32 92 19	Mulch Blanket	2,682	Sq. Yd.		
39	32 92 19	Water, Seeding	100	Unit		
40	32 92 19	Mowing	2,682	Sq. Yd.		
41	32 92 19	Weed Control	2,682	Sq. Yd.		
42	33 01 30.16	Video Taping Sewer Pipe, San.	945	Ft..		
43	33 01 30.16	Video Taping Sewer Pipe, Stm.	200	Ft..		
44	33 05 13	Structure, San. MH, 48 inch Dia.	4	Each		
45	33 05 13	Structure, Stm. MH, 48 inch Dia.	2	Each		
46	33 05 13	Structure, Stm. CB, 24 inch Dia.	2	Each		
47	33 05 13	Structure, Stm. CB, 48 inch Dia.	1	Each		
48	33 05 13	Structure Conn. To Ex. Sewer, 12 inch	1	Each		
49	33 05 13	Structure Cover, EJ #1040 San. Logo	5	Each		

Copyright © 2007 National Society of Professional Engineers for EJCDC. All rights reserved.

50	33 05 13	Structure Cover, EJ #1040 Stm. Logo	5	Each		
51	33 05 13	Structure Cover, EJ #7045	12	Each		
52	33 05 13	Structure Cover, EJ #5100	1	Each		
53	33 05 13	Structure Tap, 6 inch, Stm.	8	Each		
54	33 05 13	Structure, Inside Drop	4	Each		
55	33 11 13	Watermain, 6 inch	130	Ft..		
56	33 11 13	Watermain, 8 inch	48	Ft..		
57	33 11 13	Watermain, 12 inch	326	Ft..		
58	33 11 13	Valve & Box, 6 inch	3	Each		
59	33 11 13	Valve & Box, 8 inch	1	Each		
60	33 11 13	Valve & Box, 12 inch	1	Each		
61	33 11 13	Hydrant Assembly	3	Each		
62	33 11 13	Hydrant Lead, 6 inch	18	Ft..		
63	33 11 13	Line Stop, 12 inch	1	Each		
64	33 11 13	Thrust Block	5	Each		
65	33 31 13	San. Sewer, PVC SDR 26, 15 inch	945	Ft..		
66	33 31 13	San. Sewer Service, 6 inch	86	Ft..		
67	33 31 13	San. Sewer Service, Cleanout	3	Each		
68	33 31 13	Sewer Bypass Pumping	1	Lump Sum		
69	33 34 00	Forcemain, DI, 10 inch, Tr Det G	20	Ft..		
70	33 34 00	Forcemain, HDPE, 12 inch, HDD	373	Ft..		
71	33 41 13	Stm. Sewer, RCP, 12 inch	200	Ft..		
72	33 46 13	Underdrain, Subbase, 6 inch	2,954	Ft..		

Contract #2B: Total of All Bid Prices_____

Copyright © 2007 National Society of Professional Engineers for EJCDC. All rights reserved.

Contract #3 – Dunkley and Black River Infrastructure Improvements

Item No.	Spec Reference	Pay Item	Qty	Units	Unit Price	Amount
1	01 10 00	Mobilization, Max $296,600	1	Lump Sum		
2	01 50 00	Temporary Traffic Control	1	Lump Sum		
3	01 50 00	Maintenance Gravel	600	Cyd		
4	10 14 53	Post, Steel, U-Channel 3 lb	18	Ea		
5	10 14 53	Traffic Signs, Permanent	83	Sft		
6	10 14 53	Sign, Type III, Erect, Salv	2	Ea		
7	31 10 00	Tree, Rem., 6 inch to 18 inch	2	Ea		
8	31 10 00	Tree, Rem., 19 inch to 36 inch	5	Ea		
9	31 10 00	Clearing and Grubbing, Misc.	1	Lump Sum		
10	31 10 00	HMA Surface, Rem.	11,565	Syd		
11	31 10 00	Pavt., Rem.	208	Syd		
12	31 10 00	Sidewalk, Rem.	441	Syd		
13	31 10 00	Curb & Gutter, Rem.	3,265	Ft.		
14	31 10 00	Utility Line, Rem., Sanitary	710	Ft.		
15	31 10 00	Utility Line, Rem., Storm	990	Ft.		
16	31 10 00	Utility Line, Rem., Water	555	Ft.		
17	31 10 00	Utility Str., Rem., Sanitary	19	Ea		
18	31 10 00	Utility Str., Rem., Storm	15	Ea		
19	31 10 00	Sign, Rem.	14	Ea		
20	31 10 00	Fence, Rem.	420	Ft.		
21	31 10 00	Guardrail, Rem.	220	Ft.		
22	31 10 00	Misc. Item, Rem.	2	Ea		
23	31 10 00	Retaining Wall, Rem.	40	Ft.		

Copyright © 2007 National Society of Professional Engineers for EJCDC. All rights reserved.

24	31 10 00	Culv., Rem., 24 inch to 48 inch	1	Ea		
25	31 10 00	Non Haz Contaminated Material Handling and Disposal	15,000	Cyd		
26	31 22 13	Roadway Grading	31.5	Sta		
27	31 22 13	Embankment, CIP	2,450	Cyd		
28	33 22 13	Subgrade Undercutting, Type II	700	Cyd		
29	33 22 13	Trench Undercut and Backfill	1,000	Cyd		
30	31 23 19	Dewatering System	1	Lump Sum		
31	31 23 23.33	Fill Abandoned Utility, 8 inch	1,700	Ft.		
32	31 23 33.33	Fill Abandoned Utility, 16 inch	1,175	Ft.		
33	31 23 33.33	Fill Abandoned Utility, 18 inch	315	Ft.		
34	31 23 33	Exploratory Excavation	250	Cyd		
35	31 25 00	Silt Fence	1,250	Ft.		
36	31 25 00	Inlet Protection, Fabric Drop	35	Ea		
37	31 25 00	Aggregate Cover, 8 inch	800	Syd		
38	31 25 00	Erosion Control, Turbidity Curtain, Deep	225	Ft.		
39	31 25 00	Rip Rap, Heavy	500	Syd		
40	31 25 00	Steel Sheet Piling, Permanent	600	Sft		
41	32 01 16	Structure Cover, Adjust, Case 2	2	Ea		
42	32 01 16	Valve Box, Adjust	3	Ea		
43	32 05 19.19	Geogrid	12,960	Syd		
44	32 05 19.19	Geotextile, Separator	12,960	Syd		
45	32 11 16	Subbase, CIP	4,365	Cyd		
46	32 11 23	Aggregate Base, 21AA, 8 inch	13,095	Syd		
47	32 12 16	HMA, 4E3	1,910	Ton		
48	32 12 16	HMA, 5E3	1,450	Ton		

Copyright © 2007 National Society of Professional Engineers for EJCDC. All rights reserved.

49	32 13 13	Sidewalk, 4 inch	8,530	Sft		
50	32 13 13	Sidewalk Ramp, 6 inch	375	Sft		
51	32 13 13	Detectable Warning Surface, Cast Iron	12	Ft.		
52	32 13 13	Curb & Gutter, Conc., Det F4	3,760	Ft.		
53	32 13 13	Driveway Opening, Conc., Det M	230	Ft.		
54	32 13 13	Driveway, Nonreinf. Conc., 6 inch	602	Syd		
55	32 13 13	Driveway, Nonreinf. Conc., 8 inch	155	Syd		
56	32 13 13	Conc. Pavt., Reinf., 6 inch	12	Syd		
57	32 13 13	Conc. Spillway	20	Ft.		
58	32 15 00	Shoulder, Cl I, 6 inch	350	Syd		
59	32 17 23	Pavt. Mrkg., Waterborne, 4 inch, White	2,125	Ft.		
60	32 17 23	Pavt. Mrkg., Waterborne, 4 inch, Yellow	2,700	Ft.		
61	32 17 23	Pavt. Mrkg., Ovly. Cold Plastic, 24 inch, Stop Bar	54	Ft.		
62	32 17 23	Pavt. Mrkg., Ovly. Cold Plastic, 12 inch, Crosswalk	210	Ft.		
63	32 17 23	Pavt. Mrkg., Ovly. Cold Plastic, Handicap Sym.	3	Ea		
64	32 91 19	Topsoil Surface, 4 inch	15,750	Syd		
65	32 91 19	Topsoil Surface, 4 inch, Screened	11,500	Syd		
66	32 91 19.10	Segmental Retaining Wall	15	Syd		
67	32 91 19.10	Fence, Split Rail	305	Ft.		
68	32 91 19.10	Fence, Chain Link, 8 Feet Tall	150	Ft.		
69	32 91 19.10	Bollard, Steel	5	Ea		
70	32 92 19	Seed & Fertilizer	27,250	Syd		
71	32 92 19	Mulch Blanket	27,250	Syd		
72	32 92 19	Mulch Blanket, High Velocity	500	Syd		
73	33 05 13	Structure, San. MH, 48 inch Dia.	22	Ea		

Copyright © 2007 National Society of Professional Engineers for EJCDC. All rights reserved.

74	33 05 13	Structure, San. MH, 60 inch Dia.	5	Ea		
75	33 05 13	Structure, San. MH, 72 inch Dia.	4	Ea		
76	33 05 13	Structure, San. MH, 48 inch Dia., Over 15 Feet Deep	4	Ea		
77	33 05 13	Structure, Stm. MH, 48 inch Dia.	6	Ea		
78	33 05 13	Structure, Stm. MH, 60 inch Dia.	2	Ea		
79	33 05 13	Structure, Stm. MH, 72 inch Dia.	6	Ea		
80	33 05 13	Structure, Stm. MH, 84 inch Dia.	1	Ea		
81	33 05 13	Structure, Stm. MH, 96 inch Dia.	1	Ea		
82	33 05 13	Structure, Stm. CB, 48 inch Dia.	20	Ea		
83	33 05 13	Structure, Conn. to Ex. Sewer, 4 inch	1	Ea		
84	33 05 13	Structure, Conn. to Ex. Sewer, 6 inch	1	Ea		
85	33 05 13	Structure, Conn. to Ex. Sewer, 8 inch	7	Ea		
86	33 05 13	Structure, Conn. to Ex. Sewer, 12 inch	3	Ea		
87	33 05 13	Structure, Conn. to Ex. Sewer, 15 inch	1	Ea		
88	33 05 13	Structure, Conn. to Ex. Sewer, 18 inch	1	Ea		
89	33 05 13	Structure, Conn. to Ex. Sewer, 24 inch	1	Ea		
90	33 05 13	Structure, Conn. to Ex. Sewer, 30 inch	1	Ea		
91	33 05 13	Structure Cover, EJ #1040 Logo San	38	Ea		
92	33 05 13	Structure Cover, EJ #1040 Logo Stm	3	Ea		
93	33 05 13	Structure Cover, EJ #5100	2	Ea		
94	33 05 13	Structure Cover, EJ #6517	13	Ea		
95	33 05 13	Structure Cover, EJ #7030	6	Ea		
96	33 05 13	Structure Cover, EJ #7045	15	Ea		
97	33 05 13	Structure Tap, 8 inch, Sanitary	1	Ea		
98	33 05 13	Structure Tap, 12 inch, Storm	2	Ea		

Copyright © 2007 National Society of Professional Engineers for EJCDC. All rights reserved.

99	33 05 13	Structure, Inside Drop	4	Ea		
100	33 05 13	Structure, Outside Drop	3	Ea		
101	33 11 13	Water main, 4 inch	45	Ft.		
102	33 11 13	Water main, 6 inch	10	Ft.		
103	33 11 13	Water main, 8 inch	1,450	Ft.		
104	33 11 13	Water main, 12 inch	5	Ft.		
105	33 11 13	Valve & Box, 4 inch	1	Ea		
106	33 11 13	Valve & Box, 6 inch	1	Ea		
107	33 11 13	Valve & Box, 8 inch	2	Ea		
108	33 11 13	Hydrant Assembly	3	Ea		
109	33 11 13	Hydrant Lead, 6 inch	10	Ft.		
110	33 12 13	Water Service, 1 inch	15	Ft.		
111	33 12 13	Water Service, 2 inch	35	Ft.		
112	33 12 13	Curb Stop, 1 1/2 inch	1	Ea		
113	33 12 13	Curb Stop, 2 inch	1	Ea		
114	33 31 13	San. Sewer, 8 inch	1,103	Ft.		
115	33 31 13	San. Sewer, 12 inch	93	Ft.		
116	33 31 13	San. Sewer, 15 inch	1,234	Ft.		
117	33 31 13	San. Sewer, 18 inch	901	Ft.		
118	33 31 13	San. Sewer, 30 inch	1,363	Ft.		
119	33 31 13	San. Sewer Service, 6 inch	1,170	Ft.		
120	33 31 13	San. Sewer Service Cleanout	18	Ea		
121	33 32 19	Structure, San. Wet Well, 96 inch Dia.	1	Ea		
122	33 32 19	San. Lift Station, Black River Street	1	Ea		
123	33 32 19	San. Bypass Chamber, 84 inch Dia.	1	Ea		

Copyright © 2007 National Society of Professional Engineers for EJCDC. All rights reserved.

124	33 32 19	Emergency Standby Generator, 60 kW	1	Lump Sum		
125	33 32 19	Emergency Standby Generator, ATS, 60 kW	1	Lump Sum		
126	33 34 00	Force Main, DI, 10 inch	125	Ft.		
127	33 34 00	Force Main, HDPE, 10 inch, HDD	825	Ft.		
128	33 34 00	Structure, FM Air Release, 60 inch Dia.	2	Ea		
129	33 34 00	Structure, FM Cleanout, 60 inch Dia.	1	Ea		
130	33 41 13	Stm. Sewer, RCP, 12 inch	1,169	Ft.		
131	33 41 13	Stm. Sewer, RCP, 18 inch	369	Ft.		
132	33 41 13	Stm. Sewer, RCP, 24 inch	268	Ft.		
133	33 41 13	Stm. Sewer, RCP, 48 inch	846	Ft.		
134	33 41 13	Stm. Sewer, DI, 12 inch	210	Ft.		
135	33 41 13	Tapered End Section, Conc., 18 inch	1	Ea		
136	33 41 13	Tapered End Section, Conc., 24 inch	1	Ea		
137	33 41 13	Tapered End Section, Grate	215	Lb		
138	33 46 16	Underdrain, Subbase, 6 inch	5,050	Ft.		
139	34 71 13	Guardrail, Type B	10	Ft.		
140	34 71 13	Guardrail, Backed, Det G1	1	Ea		
141	34 71 13	Guardrail Approach Terminal, Type 1B	1	Ea		
142	34 71 13	Guardrail Departing Terminal, Type B	1	Ea		
143	34 71 13	Guardrail Reflector	5	Ea		
144	SP	Groundwater Treatment Allowance	175,000	Dlr		
145	SP	Reinforced Concrete Pile Caps	15	Ea		
146	SP	Timber Pile	425	Ea		
147	SP	Pipe Support Channel	195	Ea		
148	SP	Pipe Cradle	2,300	Ft.		

Copyright © 2007 National Society of Professional Engineers for EJCDC. All rights reserved.

Contract #3:Total of All Bid Prices_____

Unit Prices have been computed in accordance with Paragraph 11.03.B of the General Conditions.

Bidder acknowledges that estimated quantities are not guaranteed, and are solely for the purpose of comparison of Bids, and final payment for all unit price Bid items will be based on actual quantities, determined as provided in the Contract Documents.

ARTICLE 6 - TIME OF COMPLETION

6.01 Bidder agrees that the Work will be substantially complete and will be completed and ready for final payment in accordance with Paragraph 14.07 of the General Conditions on or before the dates or within the number of calendar days indicated in the Agreement.

ARTICLE 7 - ATTACHMENTS TO THIS BID

7.01 The following documents are submitted with and made a condition of this Bid:

Required Bid security in the form of _____;

ARTICLE 8 - DEFINED TERMS

8.01 The terms used in this Bid with initial capital letters have the meanings stated in the Instructions to Bidders, the General Conditions, and the Supplementary Conditions.

ARTICLE 9 - BID SUBMITTAL

9.01 This Bid is submitted by:

<u>If Bidder is other than a Corporation:</u>

Name of Business Entity: _____

Type of Business Entity: _____
(Attach applicable documentation to validate bidder's authority to do business)

By: _____
(Signature -- attach evidence of authority to sign)

Name of Signatory (typed or printed): _____

Title of Signatory: _____

Attest _____

Copyright © 2007 National Society of Professional Engineers for EJCDC. All rights reserved.

If Bidder is a Corporation:

Corporation Name: _____

State of Incorporation: _____

Type of Corporation:

(General Business, Professional, Service, Limited Liability):_____

By: _____

(Signature -- attach evidence of authority to sign)

Name of Signatory (typed or printed): _____

Title of Signatory: _____

Attest _____

Bidder's Business Address: _____

_____

_____

Phone No. _____

Fax No. _____

E-mail: _____

SUBMITTED on _____, 2014.

END OF DOCUMENT

Copyright © 2007 National Society of Professional Engineers for EJCDC. All rights reserved.

DOCUMENT 00 43 13

BID SECURITY

Bid Security shall conform to the following document:

> Engineer's Joint Construction Document Committee (EJCDC) C-430 Bid Bond (Penal Sum Form).

A copy of EJCDC C-430 is provided on the following pages for reference.

END OF DOCUMENT

BID BOND

Any singular reference to Bidder, Surety, Owner or other party shall be considered plural where applicable.

BIDDER *(Name and Address)*:

SURETY *(Name and Address of Principal Place of Business)*:

OWNER *(Name and Address)*:

BID
Bid Due Date:
Description *(Project Name and Include Location)*:

BOND
Bond Number:
Date *(Not earlier than Bid due date)*:
Penal sum _____ $ _____
(Words) (Figures)

Surety and Bidder, intending to be legally bound hereby, subject to the terms set forth below, do each cause this Bid Bond to be duly executed by an authorized officer, agent, or representative.

BIDDER

_____ (Seal)
Bidder's Name and Corporate Seal

By: _____
Signature

_____
Print Name

_____
Title

Attest: _____
Signature

_____
Title

SURETY

_____ (Seal)
Surety's Name and Corporate Seal

By: _____
Signature (Attach Power of Attorney)

_____
Print Name

_____
Title

Attest: _____
Signature

_____
Title

Note: Above addresses are to be used for giving any required notice. Provide execution by any additional parties, such as joint venturers, if necessary.

1. Bidder and Surety, jointly and severally, bind themselves, their heirs, executors, administrators, successors, and assigns to pay to Owner upon default of Bidder the penal sum set forth on the face of this Bond. Payment of the penal sum is the extent of Bidder's and Surety's liability. Recovery of such penal sum under the terms of this Bond shall be Owner's sole and exclusive remedy upon default of Bidder.

2. Default of Bidder shall occur upon the failure of Bidder to deliver within the time required by the Bidding Documents (or any extension thereof agreed to in writing by Owner) the executed Agreement required by the Bidding Documents and any performance and payment bonds required by the Bidding Documents.

3. This obligation shall be null and void if:

3.1 Owner accepts Bidder's Bid and Bidder delivers within the time required by the Bidding Documents (or any extension thereof agreed to in writing by Owner) the executed Agreement required by the Bidding Documents and any performance and payment bonds required by the Bidding Documents, or

3.2 All Bids are rejected by Owner, or

3.3 Owner fails to issue a Notice of Award to Bidder within the time specified in the Bidding Documents (or any extension thereof agreed to in writing by Bidder and, if applicable, consented to by Surety when required by Paragraph 5 hereof).

4. Payment under this Bond will be due and payable upon default of Bidder and within 30 calendar days after receipt by Bidder and Surety of written notice of default from Owner, which notice will be given with reasonable promptness, identifying this Bond and the Project and including a statement of the amount due.

5. Surety waives notice of any and all defenses based on or arising out of any time extension to issue Notice of Award agreed to in writing by Owner and Bidder, provided that the total time for issuing Notice of Award including extensions shall not in the aggregate exceed 120 days from Bid due date without Surety's written consent.

6. No suit or action shall be commenced under this Bond prior to 30 calendar days after the notice of default required in Paragraph 4 above is received by Bidder and Surety and in no case later than one year after Bid due date.

7. Any suit or action under this Bond shall be commenced only in a court of competent jurisdiction located in the state in which the Project is located.

8. Notices required hereunder shall be in writing and sent to Bidder and Surety at their respective addresses shown on the face of this Bond. Such notices may be sent by personal delivery, commercial courier, or by United States Registered or Certified Mail, return receipt requested, postage pre-paid, and shall be deemed to be effective upon receipt by the party concerned.

9. Surety shall cause to be attached to this Bond a current and effective Power of Attorney evidencing the authority of the officer, agent, or representative who executed this Bond on behalf of Surety to execute, seal, and deliver such Bond and bind the Surety thereby.

10. This Bond is intended to conform to all applicable statutory requirements. Any applicable requirement of any applicable statute that has been omitted from this Bond shall be deemed to be included herein as if set forth at length. If any provision of this Bond conflicts with any applicable statute, then the provision of said statute shall govern and the remainder of this Bond that is not in conflict therewith shall continue in full force and effect.

11. The term "Bid" as used herein includes a Bid, offer, or proposal as applicable.

SECTION 00 51 00

NOTICE OF AWARD

Date:	
Project:	
Owner: City of South Haven	Owner's Contract No.:
Contract:	Engineer's Project No.:
Bidder:	
Bidder's Address:	

You are notified that your Bid dated _____, 2016 for the above Contract has been considered. You are the Successful Bidder and are awarded the Contract for Kalamazoo Street Reconstruction, Phase 3.

The Total of All Bid Prices of your Contract is _____ Dollars ($_____).

Two (2) copies of the proposed Contract Agreement accompany this Notice of Award. Two (2) sets of the Drawings will be delivered separately or otherwise made available to you immediately.

You must comply with the following conditions precedent within fifteen (15) days of the date you receive this Notice of Award.

1. Deliver to the Owner two (2) fully executed counterparts of the Contract Agreement.
2. Deliver with the executed Contract Agreements the Contract security (Bonds) as specified in the Instructions to Bidders (Article 20), General Conditions (Paragraph 5.01), and Supplementary Conditions (Paragraph SC-5.01).
3. Deliver with the executed Contract Agreements the evidence of insurance coverage as specified in the Instructions to Bidders (Article 20), General Conditions (Paragraph 5.03), and Supplementary Conditions (Paragraph SC-5.03).

Failure to comply with these conditions within the time specified will entitle Owner to consider you in default, annul this Notice of Award, and declare your Bid security forfeited.

Within ten (10) days after you comply with the above conditions, Owner will return to you one fully executed counterpart of the Contract Documents.

_____
Owner

By: _____
Authorized Signature

_____
Title

Copy to Engineer

SECTION 00 52 00

AGREEMENT FORM

THIS AGREEMENT is by and between the City of South Haven, 539 Phoenix Street, South Haven, MI 49090 ("Owner") and _____ ("Contractor").

Owner and Contractor hereby agree as follows:

ARTICLE 1 – WORK

1.01 Contractor shall complete all work as specified or indicated in the contract documents. The work is generally described as follows:

ARTICLE 2 – THE PROJECT

2.01 The Project for which the Work under the Contract Documents may be the whole or only a part is generally described as follows:

ARTICLE 3 – ENGINEER

3.01 The Project has been designed by Abonmarche (Engineer), which is to act as Owner's representative, assume all duties and responsibilities, and have the rights and authority assigned to Engineer in the Contract Documents in connection with the completion of the Work in accordance with the Contract Documents.

ARTICLE 4 – CONTRACT TIMES

4.01 Time of the Essence

A. All time limits for Milestones, if any, Substantial Completion, and completion and readiness for final payment as stated in the Contract Documents are of the essence of the Contract.

4.02 Dates for Substantial Completion and Final Payment

A. Bidder agrees that the Work will be conducted in accordance with the following schedules:

B. Subsequent phases shall not begin until previous phases have been completed unless approved by the Engineer.

1. Contract #1: North Shore Drive Reconstruction Project

a. Begin Work:

1) Phase I/II: No earlier than September 6, 2016

2) Phase III: North Shore Drive from Brockway Street to Baseline Road shall begin no earlier than September 5, 2017.

Copyright © 2007 National Society of Professional Engineers for EJCDC. All rights reserved.

b. Milestones:

1) Phase I – Dyckman Avenue from North Shore Drive to Park Avenue shall be complete including final asphalt paving, pavement markings, and restoration no later than October 3, 2016.

2) Phase II – North Shore Drive from Dyckman Avenue to Brockway Street shall be substantially complete no later than May 31, 2017, final completion shall be no later than June 30, 2017.

3) Phase III - North Shore Drive from Brockway Street to Baseline Road shall be substantially complete no later than May 31, 2018, final completion shall be no later than June 30, 2018.

c. Substantial Completion: Through finish asphalt paving, ready for project walkthrough, and open to traffic.

d. Final Completion: Including punchlist completion.

2. Contract #2a: Monroe Boulevard and Indian Grove Lift Station Improvements and Contract #2b Kalamazoo Street – Phase IV

a. Begin Work: No earlier than September 6, 2016

b. Milestones:

1) Complete underground work within the intersection of Kalamazoo Street and Lovejoy Avenue and provide a temporary aggregate surface (maintenance gravel) to restore traffic no later than October 7, 2016.

2) Conduct no work on Monroe Boulevard until the intersection of Kalamazoo Street and Lovejoy Avenue is open to traffic.

c. Substantial Completion: Through finish asphalt paving shall be complete no later than May 31, 2017.

d. Final Completion: Including punchlist completion no later than June 30, 2017

3. Contract #3: Dunkley and Black River Infrastructure Improvements

a. Begin Work:

1) Phase I: No earlier than September 6, 2016

2) Phase II: No earlier than September 5, 2017

3) Phase III: Upon completion of Phase II.

Copyright © 2007 National Society of Professional Engineers for EJCDC. All rights reserved.

b. Milestones:

1) Phase I: Complete sewer extension to the Wells Lift Station no later than May 1, 2017.

2) Phase II: Complete utility and roadway reconstruction on Black River Street, Dunkley Avenue and Wells Street no later than May 31, 2018.

1. Including Black River Street Lift Station and Force Main Improvements.

3) Phase III: Complete tying in Black River Street Sewer, Sewer Services, and abandon existing Black River Street Sewer no later than July 28, 2018.

c. Substantial Completion: July 28, 2018.

d. Final Completion: August 31, 2018.

4. In order for the project to be substantially complete, the contractor shall have:

a. finished all removal and abandoning work,

b. completed and placed into service all underground utilities, mechanical equipment, and control equipment;

c. placed all proposed sidewalks, ramps, driveways, and concrete curbing; and

d. installed top course asphalt and permanent signage to allow public use of the streets.

C. The completion dates are subject to the following work limitations resulting from holidays and local festivals. No Work will be permitted on the following days and times;

1. Memorial Day: Friday, May 26th through Monday May 29th

2. Independence Day: Saturday, July 1st through Tuesday July 4th

3. Labor Day: Friday, September 2nd through Monday, September 4th.

4.03 Abide by MDOT closure dates for all work within MDOT rights-of-way.

4.04 Liquidated Damages

A. Contractor and Owner recognize that time is of the essence as stated in Paragraph 4.01 above and that Owner will suffer financial loss if the Work is not completed within the times specified in Paragraph 4.02 above, plus any extensions thereof allowed in accordance with Article 12 of the General Conditions. The parties also recognize the delays, expense, and difficulties involved in proving in a legal or arbitration proceeding the actual loss suffered by Owner if the Work is not completed on time. Accordingly, instead of requiring any such proof, Owner and Contractor agree that as liquidated damages for delay (but not as a penalty), Contractor shall pay Owner $1,550 for each day that expires after the time specified in Paragraph 4.02 above for Substantial

Copyright © 2007 National Society of Professional Engineers for EJCDC. All rights reserved.

Completion until the Work is substantially complete. After Substantial Completion, if Contractor shall neglect, refuse, or fail to complete the remaining Work within the Contract Time or any proper extension thereof granted by Owner, Contractor shall pay Owner $1,550 for each day that expires after the time specified in Paragraph 4.02 above for completion and readiness for final payment until the Work is completed and ready for final payment.

ARTICLE 5 – CONTRACT PRICE

5.01 Owner shall pay Contractor for completion of the Work in accordance with the Contract Documents an amount in current funds equal to the sum of the amounts determined pursuant to Paragraphs 5.01.A, 5.01.B, and 5.01.C below:

A. For all Work other than Unit Price Work, a lump sum of: $_____

All specific cash allowances are included in the above price in accordance with Paragraph 11.02 of the General Conditions.

B. For all Unit Price Work, an amount equal to the sum of the established unit price for each separately identified item of Unit Price Work times the actual quantity of that item:

The Bid prices for Unit Price Work set forth as of the Effective Date of the Agreement are based on estimated quantities. As provided in Paragraph 11.03 of the General Conditions, estimated quantities are not guaranteed, and determinations of actual quantities and classifications are to be made by Engineer as provided in Paragraph 9.07 of the General Conditions.

C. For all Work, at the prices

ARTICLE 6 – PAYMENT PROCEDURES

6.01 Submittal and Processing of Payments

A. Contractor shall submit Applications for Payment in accordance with Article 14 of the General Conditions. Applications for Payment will be processed by Engineer as provided in the General Conditions.

6.02 Progress Payments; Retainage

A. Owner shall make progress payments on account of the Contract Price on the basis of Contractor's Applications for Payment on or about the 30th day of each month during performance of the Work as provided in Paragraph 6.02.A.1 below. All such payments will be measured by the schedule of values established as provided in Paragraph 2.07.A of the General Conditions (and in the case of Unit Price Work based on the number of units completed) or, in the event there is no schedule of values, as provided in the General Requirements.

1. Prior to Substantial Completion, progress payments will be made in an amount equal to the percentage indicated below but, in each case, less the aggregate of payments previously made and less such amounts as Engineer may determine or Owner may

Copyright © 2007 National Society of Professional Engineers for EJCDC. All rights reserved.

withhold, including but not limited to liquidated damages, in accordance with Paragraph 14.02 of the General Conditions.

a. 90 percent of Work completed (with the balance being retainage). If the Work has been 50 percent completed as determined by Engineer, and if the character and progress of the Work have been satisfactory to Owner and Engineer, then as long as the character and progress of the Work remain satisfactory to Owner and Engineer, there will be no additional retainage; and

a. 10 percent of cost of materials and equipment not incorporated in the Work (with the balance being retainage).

B. Upon Substantial Completion, Owner shall pay an amount sufficient to increase total payments to Contractor to 95 percent of the Work completed, less such amounts as Engineer shall determine in accordance with Paragraph 14.02.B.5 of the General Conditions and less 100 percent of Engineer's estimate of the value of Work to be completed or corrected as shown on the tentative list of items to be completed or corrected attached to the certificate of Substantial Completion.

6.03 Final Payment

A. Upon final completion and acceptance of the Work in accordance with Paragraph 14.07 of the General Conditions, Owner shall pay the remainder of the Contract Price as recommended by Engineer as provided in said Paragraph 14.07.

ARTICLE 7 – INTEREST

7.01 All moneys not paid when due as provided in Article 14 of the General Conditions shall bear interest at the rate of 0 percent per annum.

ARTICLE 8 – CONTRACTOR'S REPRESENTATIONS

8.01 In order to induce Owner to enter into this Agreement, Contractor makes the following representations:

A. Contractor has examined and carefully studied the Contract Documents and the other related data identified in the Bidding Documents.

B. Contractor has visited the Site and become familiar with and is satisfied as to the general, local, and Site conditions that may affect cost, progress, and performance of the Work.

C. Contractor is familiar with and is satisfied as to all federal, state, and local Laws and Regulations that may affect cost, progress, and performance of the Work.

D. Contractor has carefully studied all: (1) reports of explorations and tests of subsurface conditions at or contiguous to the Site and all drawings of physical conditions relating to existing surface or subsurface structures at the Site (except Underground Facilities), if any, that have been identified in Paragraph SC-4.02 of the Supplementary Conditions as containing reliable "technical data," and (2) reports and drawings of Hazardous Environmental Conditions,

Copyright © 2007 National Society of Professional Engineers for EJCDC. All rights reserved.

if any, at the Site that have been identified in Paragraph SC-4.06 of the Supplementary Conditions as containing reliable "technical data."

E. Contractor has considered the information known to Contractor; information commonly known to contractors doing business in the locality of the Site; information and observations obtained from visits to the Site; the Contract Documents; and the Site-related reports and drawings identified in the Contract Documents, with respect to the effect of such information, observations, and documents on (1) the cost, progress, and performance of the Work; (2) the means, methods, techniques, sequences, and procedures of construction to be employed by Contractor, including any specific means, methods, techniques, sequences, and procedures of construction expressly required by the Contract Documents; and (3) Contractor's safety precautions and programs.

F. Based on the information and observations referred to in Paragraph 8.01.E above, Contractor does not consider that further examinations, investigations, explorations, tests, studies, or data are necessary for the performance of the Work at the Contract Price, within the Contract Times, and in accordance with the other terms and conditions of the Contract Documents.

G. Contractor is aware of the general nature of work to be performed by Owner and others at the Site that relates to the Work as indicated in the Contract Documents.

H. Contractor has given Engineer written notice of all conflicts, errors, ambiguities, or discrepancies that Contractor has discovered in the Contract Documents, and the written resolution thereof by Engineer is acceptable to Contractor.

I. The Contract Documents are generally sufficient to indicate and convey understanding of all terms and conditions for performance and furnishing of the Work.

ARTICLE 9 – CONTRACT DOCUMENTS

9.01 Contents

A. The Contract Documents consist of the following:

1. This Agreement (pages 1 to __, inclusive).

2. Performance bond (pages _____ to _____, inclusive).

3. Payment bond (pages _____ to _____, inclusive).

4. Other bonds (pages _____ to _____, inclusive).

   a. _____ (pages _____ to _____, inclusive).

   b. _____ (pages _____ to _____, inclusive).

   c. _____ (pages _____ to _____, inclusive).

5. General Conditions (pages _____ to _____, inclusive).

Copyright © 2007 National Society of Professional Engineers for EJCDC. All rights reserved.

6. Supplementary Conditions (pages _____ to _____, inclusive).

7. Specifications as listed in the table of contents of the Project Manual.

8. Drawings consisting of _____ sheets with each sheet bearing the following general title: _____ [or] the Drawings listed on attached sheet index.

9. Addenda (numbers _____ to _____, inclusive).

10. Exhibits to this Agreement (enumerated as follows):

    a. Contractor's Bid (pages _____ to _____, inclusive).

    b. Documentation submitted by Contractor prior to Notice of Award (pages _____ to , inclusive).

    c. [List other required attachments (if any), such as documents required by funding or lending agencies].

11. The following which may be delivered or issued on or after the Effective Date of the Agreement and are not attached hereto:

    a. Notice to Proceed (pages _____ to _____, inclusive).

    b. Work Change Directives.

    c. Change Orders.

NOTE TO USER

If any of the items listed are not to be included as Contract Documents, remove such item from the list and renumber the remaining items.

B. The documents listed in Paragraph 9.01.A are attached to this Agreement (except as expressly noted otherwise above).

C. There are no Contract Documents other than those listed above in this Article 9.

D. The Contract Documents may only be amended, modified, or supplemented as provided in Paragraph 3.04 of the General Conditions.

ARTICLE 10 – MISCELLANEOUS

10.01 Terms

A. Terms used in this Agreement will have the meanings stated in the General Conditions and the Supplementary Conditions.

Copyright © 2007 National Society of Professional Engineers for EJCDC. All rights reserved.

10.02 Assignment of Contract

A. No assignment by a party hereto of any rights under or interests in the Contract will be binding on another party hereto without the written consent of the party sought to be bound; and, specifically but without limitation, moneys that may become due and moneys that are due may not be assigned without such consent (except to the extent that the effect of this restriction may be limited by law), and unless specifically stated to the contrary in any written consent to an assignment, no assignment will release or discharge the assignor from any duty or responsibility under the Contract Documents.

10.03 Successors and Assigns

A. Owner and Contractor each binds itself, its partners, successors, assigns, and legal representatives to the other party hereto, its partners, successors, assigns, and legal representatives in respect to all covenants, agreements, and obligations contained in the Contract Documents.

10.04 Severability

A. Any provision or part of the Contract Documents held to be void or unenforceable under any Law or Regulation shall be deemed stricken, and all remaining provisions shall continue to be valid and binding upon Owner and Contractor, who agree that the Contract Documents shall be reformed to replace such stricken provision or part thereof with a valid and enforceable provision that comes as close as possible to expressing the intention of the stricken provision.

10.05 *Contractor's Certifications*

A. Contractor certifies that it has not engaged in corrupt, fraudulent, collusive, or coercive practices in competing for or in executing the Contract. For the purposes of this Paragraph 10.05:

1. "corrupt practice" means the offering, giving, receiving, or soliciting of any thing of value likely to influence the action of a public official in the bidding process or in the Contract execution;

2. "fraudulent practice" means an intentional misrepresentation of facts made (a) to influence the bidding process or the execution of the Contract to the detriment of Owner, (b) to establish Bid or Contract prices at artificial non-competitive levels, or (c) to deprive Owner of the benefits of free and open competition;

3. "collusive practice" means a scheme or arrangement between two or more Bidders, with or without the knowledge of Owner, a purpose of which is to establish Bid prices at artificial, non-competitive levels; and

4. "coercive practice" means harming or threatening to harm, directly or indirectly, persons or their property to influence their participation in the bidding process or affect the execution of the Contract.

Copyright © 2007 National Society of Professional Engineers for EJCDC. All rights reserved.

IN WITNESS WHEREOF, Owner and Contractor have signed this Agreement. Counterparts have been delivered to Owner and Contractor. All portions of the Contract Documents have been signed or have been identified by Owner and Contractor or on their behalf.

This Agreement will be effective on _____ (which is the Effective Date of the Agreement).

OWNER:

_____

By: _____

Title: _____

Attest: _____

Title: _____

Address for giving notices:

_____

_____

_____

(If Owner is a corporation, attach evidence of authority to sign. If Owner is a public body, attach evidence of authority to sign and resolution or other documents authorizing execution of this Agreement.)

CONTRACTOR

_____

By: _____

Title: _____

(If Contractor is a corporation, a partnership, or a joint venture, attach evidence of authority to sign.)

Attest: _____

Title: _____

Address for giving notices:

_____

_____

_____

License No.: _____
(Where applicable)

NOTE TO USER: Use in those states or other jurisdictions where applicable or required.

Agent for service of process:

_____

Copyright © 2007 National Society of Professional Engineers for EJCDC. All rights reserved.

DOCUMENT 00 61 13 13

PERFORMANCE BOND

The Performance Bond shall conform to the following document:

Engineer's Joint Construction Documents Committee (EJCDC) C-610 Performance Bond

A copy of EJCDC C-610 is provided on the following pages for reference.

END OF DOCUMENT

PERFORMANCE BOND

Any singular reference to Contractor, Surety, Owner, or other party shall be considered plural where applicable.

CONTRACTOR (*Name and Address*):

SURETY (*Name, and Address of Principal Place of Business*):

OWNER (*Name and Address*):

CONTRACT
Effective Date of Agreement:
Amount:
Description (*Name and Location*):

BOND
Bond Number:
Date (*Not earlier than Effective Date of Agreement*):
Amount:
Modifications to this Bond Form:

Surety and Contractor, intending to be legally bound hereby, subject to the terms set forth below, do each cause this Performance Bond to be duly executed by an authorized officer, agent, or representative.

CONTRACTOR AS PRINCIPAL

_____ (Seal)
Contractor's Name and Corporate Seal

By: _____
Signature

_____
Print Name

_____
Title

Attest: _____
Signature

_____
Title

SURETY

_____ (Seal)
Surety's Name and Corporate Seal

By: _____
Signature (Attach Power of Attorney)

_____
Print Name

_____
Title

Attest: _____
Signature

_____
Title

Note: Provide execution by additional parties, such as joint venturers, if necessary.

SAMPLE

Contractor and Surety, jointly and severally, bind themselves, their heirs, executors, administrators, successors, and assigns to Owner for the performance of the Contract, which is incorporated herein by reference.

1. If Contractor performs the Contract, Surety and Contractor have no obligation under this Bond, except to participate in conferences as provided in Paragraph 2.1.

2. If there is no Owner Default, Surety's obligation under this Bond shall arise after:
   - 2.1 Owner has notified Contractor and Surety, at the addresses described in Paragraph 9 below, that Owner is considering declaring a Contractor Default and has requested and attempted to arrange a conference with Contractor and Surety to be held not later than 15 days after receipt of such notice to discuss methods of performing the Contract. If Owner, Contractor, and Surety agree, Contractor shall be allowed a reasonable time to perform the Contract, but such an agreement shall not waive Owner's right, if any, subsequently to declare a Contractor Default; and
   - 2.2 Owner has declared a Contractor Default and formally terminated Contractor's right to complete the Contract. Such Contractor Default shall not be declared earlier than 20 days after Contractor and Surety have received notice as provided in Paragraph 2.1; and
   - 2.3 Owner has agreed to pay the Balance of the Contract Price to:
     1. Surety in accordance with the terms of the Contract; or
     2. Another contractor selected pursuant to Paragraph 3.3 to perform the Contract.

3. When Owner has satisfied the conditions of Paragraph 2, Surety shall promptly, and at Surety's expense, take one of the following actions:

   - 3.1 Arrange for Contractor, with consent of Owner, to perform and complete the Contract; or
   - 3.2 Undertake to perform and complete the Contract itself, through its agents or through independent contractors; or
   - 3.3 Obtain bids or negotiated proposals from qualified contractors acceptable to Owner for a contract for performance and completion of the Contract, arrange for a contract to be prepared for execution by Owner and contractor selected with Owner's concurrence, to be secured with performance and payment bonds executed by a qualified surety equivalent to the bonds issued on the Contract, and pay to Owner the amount of damages as described in Paragraph 5 in excess of the Balance of the Contract Price incurred by Owner resulting from Contractor Default; or
   - 3.4 Waive its right to perform and complete, arrange for completion, or obtain a new contractor, and with reasonable promptness under the circumstances:
     1. After investigation, determine the amount for which it may be liable to Owner and, as soon as practicable after the amount is determined, tender payment therefor to Owner; or
     2. Deny liability in whole or in part and notify Owner citing reasons therefor.

4. If Surety does not proceed as provided in Paragraph 3 with reasonable promptness, Surety shall be deemed to be in default on this Bond 15 days after receipt of an additional written notice from Owner to Surety demanding that Surety perform its obligations under this Bond, and Owner shall be entitled to enforce any remedy available to Owner. If Surety proceeds as provided in Paragraph 3.4, and Owner refuses the payment tendered or Surety has denied liability, in whole or in part, without further notice Owner shall be entitled to enforce any remedy available to Owner.

5. After Owner has terminated Contractor's right to complete the Contract, and if Surety elects to act under Paragraph 3.1, 3.2, or 3.3 above, then the responsibilities of Surety to Owner shall not be greater than those of Contractor under the Contract, and the responsibilities of Owner to Surety shall not be greater than those of Owner under the Contract. To the limit of the amount of this Bond, but subject to commitment by Owner

SAMPLE

of the Balance of the Contract Price to mitigation of costs and damages on the Contract, Surety is obligated without duplication for:

5.1 The responsibilities of Contractor for correction of defective Work and completion of the Contract;
5.2 Additional legal, design professional, and delay costs resulting from Contractor's Default, and resulting from the actions of or failure to act of Surety under Paragraph 3; and
5.3 Liquidated damages, or if no liquidated damages are specified in the Contract, actual damages caused by delayed performance or non-performance of Contractor.

6. Surety shall not be liable to Owner or others for obligations of Contractor that are unrelated to the Contract, and the Balance of the Contract Price shall not be reduced or set off on account of any such unrelated obligations. No right of action shall accrue on this Bond to any person or entity other than Owner or its heirs, executors, administrators, or successors.

7. Surety hereby waives notice of any change, including changes of time, to Contract or to related subcontracts, purchase orders, and other obligations.

8. Any proceeding, legal or equitable, under this Bond may be instituted in any court of competent jurisdiction in the location in which the Work or part of the Work is located, and shall be instituted within two years after Contractor Default or within two years after Contractor ceased working or within two years after Surety refuses or fails to perform its obligations under this Bond, whichever occurs first. If the provisions of this paragraph are void or prohibited by law, the minimum period of limitation available to sureties as a defense in the jurisdiction of the suit shall be applicable.

9. Notice to Surety, Owner, or Contractor shall be mailed or delivered to the address shown on the signature page.

10. When this Bond has been furnished to comply with a statutory requirement in the location where the Contract was to be performed, any provision in this Bond conflicting with said statutory requirement shall be deemed deleted herefrom and provisions conforming to such statutory requirement shall be deemed incorporated herein. The intent is that this Bond shall be construed as a statutory bond and not as a common law bond.

11. Definitions.

11.1 Balance of the Contract Price: The total amount payable by Owner to Contractor under the Contract after all proper adjustments have been made, including allowance to Contractor of any amounts received or to be received by Owner in settlement of insurance or other Claims for damages to which Contractor is entitled, reduced by all valid and proper payments made to or on behalf of Contractor under the Contract.
11.2 Contract: The agreement between Owner and Contractor identified on the signature page, including all Contract Documents and changes thereto.
11.3 Contractor Default: Failure of Contractor, which has neither been remedied nor waived, to perform or otherwise to comply with the terms of the Contract.
11.4 Owner Default: Failure of Owner, which has neither been remedied nor waived, to pay Contractor as required by the Contract or to perform and complete or otherwise comply with the other terms thereof.

SAMPLE

FOR INFORMATION ONLY – (*Name, Address and Telephone*)
Surety Agency or Broker:
Owner's Representative (*Engineer or other party*):

SAMPLE

SECTION 00 61 13.16

PAYMENT BOND FORM

The Payment Bond Form shall comform to the following document:

Engineer's Joint Construction Document Committee (EJCDC) C-615(A) Payment Bond.

A copy of EJCDC C-615(A) is provided on the following pages for reference.

END OF DOCUMENT

PAYMENT BOND

Any singular reference to Contractor, Surety, Owner, or other party shall be considered plural where applicable.

CONTRACTOR (*Name and Address*):

SURETY (*Name, and Address of Principal Place of Business*):

OWNER (*Name and Address*):
City of South Haven
539 Phoenix Street
South Haven, MI 49090

CONTRACT
Effective Date of Agreement:
Amount:
Description *(Name and Location)*:

BOND
Bond Number:
Date (*Not earlier than Effective Date of Agreement*):
Amount:
Modifications to this Bond Form:

Surety and Contractor, intending to be legally bound hereby, subject to the terms set forth below, do each cause this Payment Bond to be duly executed by an authorized officer, agent, or representative.

CONTRACTOR AS PRINCIPAL

_____ (Seal)
Contractor's Name and Corporate Seal

By: _____
Signature

_____
Print Name

_____
Title

Attest: _____
Signature

_____
Title

SURETY

_____ (Seal)
Surety's Name and Corporate Seal

By: _____
Signature (Attach Power of Attorney)

_____
Print Name

_____
Title

Attest: _____
Signature

_____
Title

Note: Provide execution by additional parties, such as joint venturers, if necessary.

1. Contractor and Surety, jointly and severally, bind themselves, their heirs, executors, administrators, successors, and assigns to Owner to pay for labor, materials, and equipment furnished by Claimants for use in the performance of the Contract, which is incorporated herein by reference.

2. With respect to Owner, this obligation shall be null and void if Contractor:

   2.1 Promptly makes payment, directly or indirectly, for all sums due Claimants, and

   2.2 Defends, indemnifies, and holds harmless Owner from all claims, demands, liens, or suits alleging non-payment by Contractor by any person or entity who furnished labor, materials, or equipment for use in the performance of the Contract, provided Owner has promptly notified Contractor and Surety (at the addresses described in Paragraph 12) of any claims, demands, liens, or suits and tendered defense of such claims, demands, liens, or suits to Contractor and Surety, and provided there is no Owner Default.

3. With respect to Claimants, this obligation shall be null and void if Contractor promptly makes payment, directly or indirectly, for all sums due.

4. Surety shall have no obligation to Claimants under this Bond until:

   4.1 Claimants who are employed by or have a direct contract with Contractor have given notice to Surety (at the address described in Paragraph 12) and sent a copy, or notice thereof, to Owner, stating that a claim is being made under this Bond and, with substantial accuracy, the amount of the claim.

   4.2 Claimants who do not have a direct contract with Contractor:
      1. Have furnished written notice to Contractor and sent a copy, or notice thereof, to Owner, within 90 days after having last performed labor or last furnished materials or equipment included in the claim stating, with substantial accuracy, the amount of the claim and the name of the party to whom the materials or equipment were furnished or supplied, or for whom the labor was done or performed; and
      2. Have either received a rejection in whole or in part from Contractor, or not received within 30 days of furnishing the above notice any communication from Contractor by which Contractor had indicated the claim will be paid directly or indirectly; and
      3. Not having been paid within the above 30 days, have sent a written notice to Surety (at the address described in Paragraph 12) and sent a copy, or notice thereof, to Owner, stating that a claim is being made under this Bond and enclosing a copy of the previous written notice furnished to Contractor.

5. If a notice by a Claimant required by Paragraph 4 is provided by Owner to Contractor or to Surety, that is sufficient compliance.

6. Reserved.

7. Surety's total obligation shall not exceed the amount of this Bond, and the amount of this Bond shall be credited for any payments made in good faith by Surety.

8. Amounts owed by Owner to Contractor under the Contract shall be used for the performance of the Contract and to satisfy claims, if any, under any performance bond. By Contractor furnishing and Owner accepting this Bond, they agree that all funds earned by Contractor in the performance of the Contract are dedicated to satisfy obligations of Contractor and Surety under this Bond, subject to Owner's priority to use the funds for the completion of the Work.

9. Surety shall not be liable to Owner, Claimants, or others for obligations of Contractor that are unrelated

to the Contract. Owner shall not be liable for payment of any costs or expenses of any Claimant under this Bond, and shall have under this Bond no obligations to make payments to, give notices on behalf of, or otherwise have obligations to Claimants under this Bond.

10. Surety hereby waives notice of any change, including changes of time, to the Contract or to related subcontracts, purchase orders, and other obligations.

11. No suit or action shall be commenced by a Claimant under this Bond other than in a court of competent jurisdiction in the location in which the Work or part of the Work is located or after the expiration of one year from the date (1) on which the Claimant gave the notice required by Paragraph 4.1 or Paragraph 4.2.3, or (2) on which the last labor or service was performed by anyone or the last materials or equipment were furnished by anyone under the Contract, whichever of (1) or (2) first occurs. If the provisions of this paragraph are void or prohibited by law, the minimum period of limitation available to sureties as a defense in the jurisdiction of the suit shall be applicable.

12. Notice to Surety, Owner, or Contractor shall be mailed or delivered to the addresses shown on the signature page. Actual receipt of notice by Surety, Owner, or Contractor, however accomplished, shall be sufficient compliance as of the date received at the address shown on the signature page.

13. When this Bond has been furnished to comply with a statutory requirement in the location where the Contract was to be performed, any provision in this Bond conflicting with said statutory requirement shall be deemed deleted herefrom and provisions conforming to such statutory requirement shall be deemed incorporated herein. The intent is that this Bond shall be construed as a statutory Bond and not as a common law bond.

14. Upon request of any person or entity appearing to be a potential beneficiary of this Bond, Contractor shall promptly furnish a copy of this Bond or shall permit a copy to be made.

15. Definitions

15.1 Claimant: An individual or entity having a direct contract with Contractor, or with a first-tier subcontractor of Contractor, to furnish labor, materials, or equipment for use in the performance of the Contract. The intent of this Bond shall be to include without limitation in the terms "labor, materials or equipment" that part of water, gas, power, light, heat, oil, gasoline, telephone service, or rental equipment used in the Contract, architectural and engineering services required for performance of the Work of Contractor and Contractor's subcontractors, and all other items for which a mechanic's lien may be asserted in the jurisdiction where the labor, materials, or equipment were furnished.

15.2 Contract: The agreement between Owner and Contractor identified on the signature page, including all Contract Documents and changes thereto.

15.3 Owner Default: Failure of Owner, which has neither been remedied nor waived, to pay Contractor as required by the Contract, or to perform and complete or otherwise comply with the other terms thereof.

FOR INFORMATION ONLY – (*Name, Address, and Telephone*) Surety Agency or Broker: Owner's Representative (*Engineer or other*):

SECTION 00 72 00

GENERAL CONDITIONS OF THE
CONSTRUCTION CONTRACT

TABLE OF CONTENTS

Page

Article 1 – Definitions and Terminology 1
1.01 Defined Terms 1
1.02 Terminology 5

Article 2 – Preliminary Matters 6
2.01 Delivery of Bonds and Evidence of Insurance 6
2.02 Copies of Documents 6
2.03 Commencement of Contract Times; Notice to Proceed 6
2.04 Starting the Work 7
2.05 Before Starting Construction 7
2.06 Preconstruction Conference; Designation of Authorized Representatives 7
2.07 Initial Acceptance of Schedules 7

Article 3 – Contract Documents: Intent, Amending, Reuse 8
3.01 Intent 8
3.02 Reference Standards 8
3.03 Reporting and Resolving Discrepancies 9
3.04 Amending and Supplementing Contract Documents 9
3.05 Reuse of Documents 10
3.06 Electronic Data 10

Article 4 – Availability of Lands; Subsurface and Physical Conditions; Hazardous Environmental Conditions; Reference Points 11
4.01 Availability of Lands 11
4.02 Subsurface and Physical Conditions 11
4.03 Differing Subsurface or Physical Conditions 12
4.04 Underground Facilities 13
4.05 Reference Points 14
4.06 Hazardous Environmental Condition at Site 14

Article 5 – Bonds and Insurance 16
5.01 Performance, Payment, and Other Bonds 16
5.02 Licensed Sureties and Insurers 16
5.03 Certificates of Insurance 17
5.04 Contractor's Insurance 17
5.05 Owner's Liability Insurance 19
5.06 Property Insurance 19

Copyright © 2007 National Society of Professional Engineers for EJCDC. All rights reserved.

5.07 Waiver of Rights....20
5.08 Receipt and Application of Insurance Proceeds....21
5.09 Acceptance of Bonds and Insurance; Option to Replace....21
5.10 Partial Utilization, Acknowledgment of Property Insurer....22

Article 6 – Contractor's Responsibilities....22
6.01 Supervision and Superintendence....22
6.02 Labor; Working Hours....22
6.03 Services, Materials, and Equipment....22
6.04 Progress Schedule....23
6.05 Substitutes and "Or-Equals"....23
6.06 Concerning Subcontractors, Suppliers, and Others....25
6.07 Patent Fees and Royalties....27
6.08 Permits....27
6.09 Laws and Regulations....28
6.10 Taxes....28
6.11 Use of Site and Other Areas....28
6.12 Record Documents....29
6.13 Safety and Protection....29
6.14 Safety Representative....30
6.15 Hazard Communication Programs....30
6.16 Emergencies....30
6.17 Shop Drawings and Samples....31
6.18 Continuing the Work....32
6.19 Contractor's General Warranty and Guarantee....33
6.20 Indemnification....33
6.21 Delegation of Professional Design Services....34

Article 7 – Other Work at the Site....35
7.01 Related Work at Site....35
7.02 Coordination....35
7.03 Legal Relationships....36

Article 8 – Owner's Responsibilities....36
8.01 Communications to Contractor....36
8.02 Replacement of Engineer....36
8.03 Furnish Data....36
8.04 Pay When Due....36
8.05 Lands and Easements; Reports and Tests....36
8.06 Insurance....37
8.07 Change Orders....37
8.08 Inspections, Tests, and Approvals....37
8.09 Limitations on Owner's Responsibilities....37
8.10 Undisclosed Hazardous Environmental Condition....37
8.11 Evidence of Financial Arrangements....37
8.12 Compliance with Safety Program....37

Copyright © 2007 National Society of Professional Engineers for EJCDC. All rights reserved.

Article 9 – Engineer's Status During Construction 37
9.01 Owner's Representative 37
9.02 Visits to Site 38
9.03 Project Representative 38
9.04 Authorized Variations in Work 38
9.05 Rejecting Defective Work 39
9.06 Shop Drawings, Change Orders and Payments 39
9.07 Determinations for Unit Price Work 39
9.08 Decisions on Requirements of Contract Documents and Acceptability of Work 39
9.09 Limitations on Engineer's Authority and Responsibilities 40
9.10 Compliance with Safety Program 40

Article 10 – Changes in the Work; Claims 40
10.01 Authorized Changes in the Work 40
10.02 Unauthorized Changes in the Work 41
10.03 Execution of Change Orders 41
10.04 Notification to Surety 41
10.05 Claims 41

Article 11 – Cost of the Work; Allowances; Unit Price Work 42
11.01 Cost of the Work 42
11.02 Allowances 45
11.03 Unit Price Work 46

Article 12 – Change of Contract Price; Change of Contract Times 46
12.01 Change of Contract Price 46
12.02 Change of Contract Times 47
12.03 Delays 48

Article 13 – Tests and Inspections; Correction, Removal or Acceptance of Defective Work 48
13.01 Notice of Defects 48
13.02 Access to Work 48
13.03 Tests and Inspections 49
13.04 Uncovering Work 49
13.05 Owner May Stop the Work 50
13.06 Correction or Removal of Defective Work 50
13.07 Correction Period 50
13.08 Acceptance of Defective Work 51
13.09 Owner May Correct Defective Work 52

Article 14 – Payments to Contractor and Completion 52
14.01 Schedule of Values 52
14.02 Progress Payments 53
14.03 Contractor's Warranty of Title 55
14.04 Substantial Completion 55
14.05 Partial Utilization 56

Copyright © 2007 National Society of Professional Engineers for EJCDC. All rights reserved.

14.06 Final Inspection 57
14.07 Final Payment 57
14.08 Final Completion Delayed 58
14.09 Waiver of Claims 58

Article 15 – Suspension of Work and Termination 59
15.01 Owner May Suspend Work 59
15.02 Owner May Terminate for Cause 59
15.03 Owner May Terminate For Convenience 60
15.04 Contractor May Stop Work or Terminate 61

Article 16 – Dispute Resolution 61
16.01 Methods and Procedures 61

Article 17 – Miscellaneous 62
17.01 Giving Notice 62
17.02 Computation of Times 62
17.03 Cumulative Remedies 62
17.04 Survival of Obligations 62
17.05 Controlling Law 62
17.06 Headings 62

Copyright © 2007 National Society of Professional Engineers for EJCDC. All rights reserved.

ARTICLE 1 – DEFINITIONS AND TERMINOLOGY

1.01 *Defined Terms*

A. Wherever used in the Bidding Requirements or Contract Documents and printed with initial capital letters, the terms listed below will have the meanings indicated which are applicable to both the singular and plural thereof. In addition to terms specifically defined, terms with initial capital letters in the Contract Documents include references to identified articles and paragraphs, and the titles of other documents or forms.

1. *Addenda*—Written or graphic instruments issued prior to the opening of Bids which clarify, correct, or change the Bidding Requirements or the proposed Contract Documents.

2. *Agreement*—The written instrument which is evidence of the agreement between Owner and Contractor covering the Work.

3. *Application for Payment*—The form acceptable to Engineer which is to be used by Contractor during the course of the Work in requesting progress or final payments and which is to be accompanied by such supporting documentation as is required by the Contract Documents.

4. *Asbestos*—Any material that contains more than one percent asbestos and is friable or is releasing asbestos fibers into the air above current action levels established by the United States Occupational Safety and Health Administration.

5. *Bid*—The offer or proposal of a Bidder submitted on the prescribed form setting forth the prices for the Work to be performed.

6. *Bidder*—The individual or entity who submits a Bid directly to Owner.

7. *Bidding Documents*—The Bidding Requirements and the proposed Contract Documents (including all Addenda).

8. *Bidding Requirements*—The advertisement or invitation to bid, Instructions to Bidders, Bid security of acceptable form, if any, and the Bid Form with any supplements.

9. *Change Order*—A document recommended by Engineer which is signed by Contractor and Owner and authorizes an addition, deletion, or revision in the Work or an adjustment in the Contract Price or the Contract Times, issued on or after the Effective Date of the Agreement.

10. *Claim*—A demand or assertion by Owner or Contractor seeking an adjustment of Contract Price or Contract Times, or both, or other relief with respect to the terms of the Contract. A demand for money or services by a third party is not a Claim.

11. *Contract*—The entire and integrated written agreement between the Owner and Contractor concerning the Work. The Contract supersedes prior negotiations, representations, or agreements, whether written or oral.

Copyright © 2007 National Society of Professional Engineers for EJCDC. All rights reserved.

12. *Contract Documents*—Those items so designated in the Agreement. Only printed or hard copies of the items listed in the Agreement are Contract Documents. Approved Shop Drawings, other Contractor submittals, and the reports and drawings of subsurface and physical conditions are not Contract Documents.

13. *Contract Price*—The moneys payable by Owner to Contractor for completion of the Work in accordance with the Contract Documents as stated in the Agreement (subject to the provisions of Paragraph 11.03 in the case of Unit Price Work).

14. *Contract Times*—The number of days or the dates stated in the Agreement to: (i) achieve Milestones, if any; (ii) achieve Substantial Completion; and (iii) complete the Work so that it is ready for final payment as evidenced by Engineer's written recommendation of final payment.

15. *Contractor*—The individual or entity with whom Owner has entered into the Agreement.

16. *Cost of the Work*—See Paragraph 11.01 for definition.

17. *Drawings*—That part of the Contract Documents prepared or approved by Engineer which graphically shows the scope, extent, and character of the Work to be performed by Contractor. Shop Drawings and other Contractor submittals are not Drawings as so defined.

18. *Effective Date of the Agreement*—The date indicated in the Agreement on which it becomes effective, but if no such date is indicated, it means the date on which the Agreement is signed and delivered by the last of the two parties to sign and deliver.

19. *Engineer*—The individual or entity named as such in the Agreement.

20. *Field Order*—A written order issued by Engineer which requires minor changes in the Work but which does not involve a change in the Contract Price or the Contract Times.

21. *General Requirements*—Sections of Division 1 of the Specifications.

22. *Hazardous Environmental Condition*—The presence at the Site of Asbestos, PCBs, Petroleum, Hazardous Waste, or Radioactive Material in such quantities or circumstances that may present a substantial danger to persons or property exposed thereto.

23. *Hazardous Waste*—The term Hazardous Waste shall have the meaning provided in Section 1004 of the Solid Waste Disposal Act (42 USC Section 6903) as amended from time to time.

24. *Laws and Regulations; Laws or Regulations*—Any and all applicable laws, rules, regulations, ordinances, codes, and orders of any and all governmental bodies, agencies, authorities, and courts having jurisdiction.

25. *Liens*—Charges, security interests, or encumbrances upon Project funds, real property, or personal property.

26. *Milestone*—A principal event specified in the Contract Documents relating to an intermediate completion date or time prior to Substantial Completion of all the Work.

Copyright © 2007 National Society of Professional Engineers for EJCDC. All rights reserved.

27. *Notice of Award*—The written notice by Owner to the Successful Bidder stating that upon timely compliance by the Successful Bidder with the conditions precedent listed therein, Owner will sign and deliver the Agreement.

28. *Notice to Proceed*—A written notice given by Owner to Contractor fixing the date on which the Contract Times will commence to run and on which Contractor shall start to perform the Work under the Contract Documents.

29. *Owner*—The individual or entity with whom Contractor has entered into the Agreement and for whom the Work is to be performed.

30. *PCBs*—Polychlorinated biphenyls.

31. *Petroleum*—Petroleum, including crude oil or any fraction thereof which is liquid at standard conditions of temperature and pressure (60 degrees Fahrenheit and 14.7 pounds per square inch absolute), such as oil, petroleum, fuel oil, oil sludge, oil refuse, gasoline, kerosene, and oil mixed with other non-Hazardous Waste and crude oils.

32. *Progress Schedule*—A schedule, prepared and maintained by Contractor, describing the sequence and duration of the activities comprising the Contractor's plan to accomplish the Work within the Contract Times.

33. *Project*—The total construction of which the Work to be performed under the Contract Documents may be the whole, or a part.

34. *Project Manual*—The bound documentary information prepared for bidding and constructing the Work. A listing of the contents of the Project Manual, which may be bound in one or more volumes, is contained in the table(s) of contents.

35. *Radioactive Material*—Source, special nuclear, or byproduct material as defined by the Atomic Energy Act of 1954 (42 USC Section 2011 et seq.) as amended from time to time.

36. *Resident Project Representative*—The authorized representative of Engineer who may be assigned to the Site or any part thereof.

37. *Samples*—Physical examples of materials, equipment, or workmanship that are representative of some portion of the Work and which establish the standards by which such portion of the Work will be judged.

38. *Schedule of Submittals*—A schedule, prepared and maintained by Contractor, of required submittals and the time requirements to support scheduled performance of related construction activities.

39. *Schedule of Values*—A schedule, prepared and maintained by Contractor, allocating portions of the Contract Price to various portions of the Work and used as the basis for reviewing Contractor's Applications for Payment.

Copyright © 2007 National Society of Professional Engineers for EJCDC. All rights reserved.

40. *Shop Drawings*—All drawings, diagrams, illustrations, schedules, and other data or information which are specifically prepared or assembled by or for Contractor and submitted by Contractor to illustrate some portion of the Work.

41. *Site*—Lands or areas indicated in the Contract Documents as being furnished by Owner upon which the Work is to be performed, including rights-of-way and easements for access thereto, and such other lands furnished by Owner which are designated for the use of Contractor.

42. *Specifications*—That part of the Contract Documents consisting of written requirements for materials, equipment, systems, standards and workmanship as applied to the Work, and certain administrative requirements and procedural matters applicable thereto.

43. *Subcontractor*—An individual or entity having a direct contract with Contractor or with any other Subcontractor for the performance of a part of the Work at the Site.

44. *Substantial Completion*—The time at which the Work (or a specified part thereof) has progressed to the point where, in the opinion of Engineer, the Work (or a specified part thereof) is sufficiently complete, in accordance with the Contract Documents, so that the Work (or a specified part thereof) can be utilized for the purposes for which it is intended. The terms "substantially complete" and "substantially completed" as applied to all or part of the Work refer to Substantial Completion thereof.

45. *Successful Bidder*—The Bidder submitting a responsive Bid to whom Owner makes an award.

46. *Supplementary Conditions*—That part of the Contract Documents which amends or supplements these General Conditions.

47. *Supplier*—A manufacturer, fabricator, supplier, distributor, materialman, or vendor having a direct contract with Contractor or with any Subcontractor to furnish materials or equipment to be incorporated in the Work by Contractor or Subcontractor.

48. *Underground Facilities*—All underground pipelines, conduits, ducts, cables, wires, manholes, vaults, tanks, tunnels, or other such facilities or attachments, and any encasements containing such facilities, including those that convey electricity, gases, steam, liquid petroleum products, telephone or other communications, cable television, water, wastewater, storm water, other liquids or chemicals, or traffic or other control systems.

49. *Unit Price Work*—Work to be paid for on the basis of unit prices.

50. *Work*—The entire construction or the various separately identifiable parts thereof required to be provided under the Contract Documents. Work includes and is the result of performing or providing all labor, services, and documentation necessary to produce such construction, and furnishing, installing, and incorporating all materials and equipment into such construction, all as required by the Contract Documents.

51. *Work Change Directive*—A written statement to Contractor issued on or after the Effective Date of the Agreement and signed by Owner and recommended by Engineer ordering an

Copyright © 2007 National Society of Professional Engineers for EJCDC. All rights reserved.

addition, deletion, or revision in the Work, or responding to differing or unforeseen subsurface or physical conditions under which the Work is to be performed or to emergencies. A Work Change Directive will not change the Contract Price or the Contract Times but is evidence that the parties expect that the change ordered or documented by a Work Change Directive will be incorporated in a subsequently issued Change Order following negotiations by the parties as to its effect, if any, on the Contract Price or Contract Times.

1.02 *Terminology*

A. The words and terms discussed in Paragraph 1.02.B through F are not defined but, when used in the Bidding Requirements or Contract Documents, have the indicated meaning.

B. *Intent of Certain Terms or Adjectives:*

1. The Contract Documents include the terms "as allowed," "as approved," "as ordered," "as directed" or terms of like effect or import to authorize an exercise of professional judgment by Engineer. In addition, the adjectives "reasonable," "suitable," "acceptable," "proper," "satisfactory," or adjectives of like effect or import are used to describe an action or determination of Engineer as to the Work. It is intended that such exercise of professional judgment, action, or determination will be solely to evaluate, in general, the Work for compliance with the information in the Contract Documents and with the design concept of the Project as a functioning whole as shown or indicated in the Contract Documents (unless there is a specific statement indicating otherwise). The use of any such term or adjective is not intended to and shall not be effective to assign to Engineer any duty or authority to supervise or direct the performance of the Work, or any duty or authority to undertake responsibility contrary to the provisions of Paragraph 9.09 or any other provision of the Contract Documents.

C. *Day:*

1. The word "day" means a calendar day of 24 hours measured from midnight to the next midnight.

D. *Defective:*

1. The word "defective," when modifying the word "Work," refers to Work that is unsatisfactory, faulty, or deficient in that it:

a. does not conform to the Contract Documents; or

b. does not meet the requirements of any applicable inspection, reference standard, test, or approval referred to in the Contract Documents; or

c. has been damaged prior to Engineer's recommendation of final payment (unless responsibility for the protection thereof has been assumed by Owner at Substantial Completion in accordance with Paragraph 14.04 or 14.05).

E. *Furnish, Install, Perform, Provide:*

Copyright © 2007 National Society of Professional Engineers for EJCDC. All rights reserved.

1. The word "furnish," when used in connection with services, materials, or equipment, shall mean to supply and deliver said services, materials, or equipment to the Site (or some other specified location) ready for use or installation and in usable or operable condition.

2. The word "install," when used in connection with services, materials, or equipment, shall mean to put into use or place in final position said services, materials, or equipment complete and ready for intended use.

3. The words "perform" or "provide," when used in connection with services, materials, or equipment, shall mean to furnish and install said services, materials, or equipment complete and ready for intended use.

4. When "furnish," "install," "perform," or "provide" is not used in connection with services, materials, or equipment in a context clearly requiring an obligation of Contractor, "provide" is implied.

F. Unless stated otherwise in the Contract Documents, words or phrases that have a well-known technical or construction industry or trade meaning are used in the Contract Documents in accordance with such recognized meaning.

ARTICLE 2 – PRELIMINARY MATTERS

2.01 *Delivery of Bonds and Evidence of Insurance*

A. When Contractor delivers the executed counterparts of the Agreement to Owner, Contractor shall also deliver to Owner such bonds as Contractor may be required to furnish.

B. *Evidence of Insurance:* Before any Work at the Site is started, Contractor and Owner shall each deliver to the other, with copies to each additional insured identified in the Supplementary Conditions, certificates of insurance (and other evidence of insurance which either of them or any additional insured may reasonably request) which Contractor and Owner respectively are required to purchase and maintain in accordance with Article 5.

2.02 *Copies of Documents*

A. Owner shall furnish to Contractor up to ten printed or hard copies of the Drawings and Project Manual. Additional copies will be furnished upon request at the cost of reproduction.

2.03 *Commencement of Contract Times; Notice to Proceed*

A. The Contract Times will commence to run on the thirtieth day after the Effective Date of the Agreement or, if a Notice to Proceed is given, on the day indicated in the Notice to Proceed. A Notice to Proceed may be given at any time within 30 days after the Effective Date of the Agreement. In no event will the Contract Times commence to run later than the sixtieth day after the day of Bid opening or the thirtieth day after the Effective Date of the Agreement, whichever date is earlier.

Copyright © 2007 National Society of Professional Engineers for EJCDC. All rights reserved.

2.04 *Starting the Work*

A. Contractor shall start to perform the Work on the date when the Contract Times commence to run. No Work shall be done at the Site prior to the date on which the Contract Times commence to run.

2.05 *Before Starting Construction*

A. *Preliminary Schedules:* Within 10 days after the Effective Date of the Agreement (unless otherwise specified in the General Requirements), Contractor shall submit to Engineer for timely review:

1. a preliminary Progress Schedule indicating the times (numbers of days or dates) for starting and completing the various stages of the Work, including any Milestones specified in the Contract Documents;

2. a preliminary Schedule of Submittals; and

3. a preliminary Schedule of Values for all of the Work which includes quantities and prices of items which when added together equal the Contract Price and subdivides the Work into component parts in sufficient detail to serve as the basis for progress payments during performance of the Work. Such prices will include an appropriate amount of overhead and profit applicable to each item of Work.

2.06 *Preconstruction Conference; Designation of Authorized Representatives*

A. Before any Work at the Site is started, a conference attended by Owner, Contractor, Engineer, and others as appropriate will be held to establish a working understanding among the parties as to the Work and to discuss the schedules referred to in Paragraph 2.05.A, procedures for handling Shop Drawings and other submittals, processing Applications for Payment, and maintaining required records.

B. At this conference Owner and Contractor each shall designate, in writing, a specific individual to act as its authorized representative with respect to the services and responsibilities under the Contract. Such individuals shall have the authority to transmit instructions, receive information, render decisions relative to the Contract, and otherwise act on behalf of each respective party.

2.07 *Initial Acceptance of Schedules*

A. At least 10 days before submission of the first Application for Payment a conference attended by Contractor, Engineer, and others as appropriate will be held to review for acceptability to Engineer as provided below the schedules submitted in accordance with Paragraph 2.05.A. Contractor shall have an additional 10 days to make corrections and adjustments and to complete and resubmit the schedules. No progress payment shall be made to Contractor until acceptable schedules are submitted to Engineer.

1. The Progress Schedule will be acceptable to Engineer if it provides an orderly progression of the Work to completion within the Contract Times. Such acceptance will not impose on Engineer responsibility for the Progress Schedule, for sequencing, scheduling, or progress of

Copyright © 2007 National Society of Professional Engineers for EJCDC. All rights reserved.

the Work, nor interfere with or relieve Contractor from Contractor's full responsibility therefor.

2. Contractor's Schedule of Submittals will be acceptable to Engineer if it provides a workable arrangement for reviewing and processing the required submittals.

3. Contractor's Schedule of Values will be acceptable to Engineer as to form and substance if it provides a reasonable allocation of the Contract Price to component parts of the Work.

ARTICLE 3 – CONTRACT DOCUMENTS: INTENT, AMENDING, REUSE

3.01 *Intent*

A. The Contract Documents are complementary; what is required by one is as binding as if required by all.

B. It is the intent of the Contract Documents to describe a functionally complete project (or part thereof) to be constructed in accordance with the Contract Documents. Any labor, documentation, services, materials, or equipment that reasonably may be inferred from the Contract Documents or from prevailing custom or trade usage as being required to produce the indicated result will be provided whether or not specifically called for, at no additional cost to Owner.

C. Clarifications and interpretations of the Contract Documents shall be issued by Engineer as provided in Article 9.

3.02 *Reference Standards*

A. Standards, Specifications, Codes, Laws, and Regulations

1. Reference to standards, specifications, manuals, or codes of any technical society, organization, or association, or to Laws or Regulations, whether such reference be specific or by implication, shall mean the standard, specification, manual, code, or Laws or Regulations in effect at the time of opening of Bids (or on the Effective Date of the Agreement if there were no Bids), except as may be otherwise specifically stated in the Contract Documents.

2. No provision of any such standard, specification, manual, or code, or any instruction of a Supplier, shall be effective to change the duties or responsibilities of Owner, Contractor, or Engineer, or any of their subcontractors, consultants, agents, or employees, from those set forth in the Contract Documents. No such provision or instruction shall be effective to assign to Owner, Engineer, or any of their officers, directors, members, partners, employees, agents, consultants, or subcontractors, any duty or authority to supervise or direct the performance of the Work or any duty or authority to undertake responsibility inconsistent with the provisions of the Contract Documents.

3.03 *Reporting and Resolving Discrepancies*

A. *Reporting Discrepancies:*

Copyright © 2007 National Society of Professional Engineers for EJCDC. All rights reserved.

1. *Contractor's Review of Contract Documents Before Starting Work*: Before undertaking each part of the Work, Contractor shall carefully study and compare the Contract Documents and check and verify pertinent figures therein and all applicable field measurements. Contractor shall promptly report in writing to Engineer any conflict, error, ambiguity, or discrepancy which Contractor discovers, or has actual knowledge of, and shall obtain a written interpretation or clarification from Engineer before proceeding with any Work affected thereby.

2. *Contractor's Review of Contract Documents During Performance of Work*: If, during the performance of the Work, Contractor discovers any conflict, error, ambiguity, or discrepancy within the Contract Documents, or between the Contract Documents and (a) any applicable Law or Regulation , (b) any standard, specification, manual, or code, or (c) any instruction of any Supplier, then Contractor shall promptly report it to Engineer in writing. Contractor shall not proceed with the Work affected thereby (except in an emergency as required by Paragraph 6.16.A) until an amendment or supplement to the Contract Documents has been issued by one of the methods indicated in Paragraph 3.04.

3. Contractor shall not be liable to Owner or Engineer for failure to report any conflict, error, ambiguity, or discrepancy in the Contract Documents unless Contractor had actual knowledge thereof.

B. *Resolving Discrepancies:*

1. Except as may be otherwise specifically stated in the Contract Documents, the provisions of the Contract Documents shall take precedence in resolving any conflict, error, ambiguity, or discrepancy between the provisions of the Contract Documents and:

   a. the provisions of any standard, specification, manual, or code, or the instruction of any Supplier (whether or not specifically incorporated by reference in the Contract Documents); or

   b. the provisions of any Laws or Regulations applicable to the performance of the Work (unless such an interpretation of the provisions of the Contract Documents would result in violation of such Law or Regulation).

3.04 *Amending and Supplementing Contract Documents*

A. The Contract Documents may be amended to provide for additions, deletions, and revisions in the Work or to modify the terms and conditions thereof by either a Change Order or a Work Change Directive.

B. The requirements of the Contract Documents may be supplemented, and minor variations and deviations in the Work may be authorized, by one or more of the following ways:

1. A Field Order;

2. Engineer's approval of a Shop Drawing or Sample (subject to the provisions of Paragraph 6.17.D.3); or

Copyright © 2007 National Society of Professional Engineers for EJCDC. All rights reserved.

3. Engineer's written interpretation or clarification.

3.05 *Reuse of Documents*

A. Contractor and any Subcontractor or Supplier shall not:

1. have or acquire any title to or ownership rights in any of the Drawings, Specifications, or other documents (or copies of any thereof) prepared by or bearing the seal of Engineer or its consultants, including electronic media editions; or

2. reuse any such Drawings, Specifications, other documents, or copies thereof on extensions of the Project or any other project without written consent of Owner and Engineer and specific written verification or adaptation by Engineer.

B. The prohibitions of this Paragraph 3.05 will survive final payment, or termination of the Contract. Nothing herein shall preclude Contractor from retaining copies of the Contract Documents for record purposes.

3.06 *Electronic Data*

A. Unless otherwise stated in the Supplementary Conditions, the data furnished by Owner or Engineer to Contractor, or by Contractor to Owner or Engineer, that may be relied upon are limited to the printed copies (also known as hard copies). Files in electronic media format of text, data, graphics, or other types are furnished only for the convenience of the receiving party. Any conclusion or information obtained or derived from such electronic files will be at the user's sole risk. If there is a discrepancy between the electronic files and the hard copies, the hard copies govern.

B. Because data stored in electronic media format can deteriorate or be modified inadvertently or otherwise without authorization of the data's creator, the party receiving electronic files agrees that it will perform acceptance tests or procedures within 60 days, after which the receiving party shall be deemed to have accepted the data thus transferred. Any errors detected within the 60-day acceptance period will be corrected by the transferring party.

C. When transferring documents in electronic media format, the transferring party makes no representations as to long term compatibility, usability, or readability of documents resulting from the use of software application packages, operating systems, or computer hardware differing from those used by the data's creator.

ARTICLE 4 – AVAILABILITY OF LANDS; SUBSURFACE AND PHYSICAL CONDITIONS; HAZARDOUS ENVIRONMENTAL CONDITIONS; REFERENCE POINTS

4.01 *Availability of Lands*

A. Owner shall furnish the Site. Owner shall notify Contractor of any encumbrances or restrictions not of general application but specifically related to use of the Site with which Contractor must comply in performing the Work. Owner will obtain in a timely manner and pay for easements for permanent structures or permanent changes in existing facilities. If Contractor and Owner are unable to agree on entitlement to or on the amount or extent, if any, of any adjustment in the

Copyright © 2007 National Society of Professional Engineers for EJCDC. All rights reserved.

Contract Price or Contract Times, or both, as a result of any delay in Owner's furnishing the Site or a part thereof, Contractor may make a Claim therefor as provided in Paragraph 10.05.

B. Upon reasonable written request, Owner shall furnish Contractor with a current statement of record legal title and legal description of the lands upon which the Work is to be performed and Owner's interest therein as necessary for giving notice of or filing a mechanic's or construction lien against such lands in accordance with applicable Laws and Regulations.

C. Contractor shall provide for all additional lands and access thereto that may be required for temporary construction facilities or storage of materials and equipment.

4.02 *Subsurface and Physical Conditions*

A. *Reports and Drawings:* The Supplementary Conditions identify:

1. those reports known to Owner of explorations and tests of subsurface conditions at or contiguous to the Site; and

2. those drawings known to Owner of physical conditions relating to existing surface or subsurface structures at the Site (except Underground Facilities).

B. *Limited Reliance by Contractor on Technical Data Authorized:* Contractor may rely upon the accuracy of the "technical data" contained in such reports and drawings, but such reports and drawings are not Contract Documents. Such "technical data" is identified in the Supplementary Conditions. Except for such reliance on such "technical data," Contractor may not rely upon or make any claim against Owner or Engineer, or any of their officers, directors, members, partners, employees, agents, consultants, or subcontractors with respect to:

1. the completeness of such reports and drawings for Contractor's purposes, including, but not limited to, any aspects of the means, methods, techniques, sequences, and procedures of construction to be employed by Contractor, and safety precautions and programs incident thereto; or

2. other data, interpretations, opinions, and information contained in such reports or shown or indicated in such drawings; or

3. any Contractor interpretation of or conclusion drawn from any "technical data" or any such other data, interpretations, opinions, or information.

4.03 *Differing Subsurface or Physical Conditions*

A. *Notice:* If Contractor believes that any subsurface or physical condition that is uncovered or revealed either:

1. is of such a nature as to establish that any "technical data" on which Contractor is entitled to rely as provided in Paragraph 4.02 is materially inaccurate; or

2. is of such a nature as to require a change in the Contract Documents; or

Copyright © 2007 National Society of Professional Engineers for EJCDC. All rights reserved.

3. differs materially from that shown or indicated in the Contract Documents; or

4. is of an unusual nature, and differs materially from conditions ordinarily encountered and generally recognized as inherent in work of the character provided for in the Contract Documents;

then Contractor shall, promptly after becoming aware thereof and before further disturbing the subsurface or physical conditions or performing any Work in connection therewith (except in an emergency as required by Paragraph 6.16.A), notify Owner and Engineer in writing about such condition. Contractor shall not further disturb such condition or perform any Work in connection therewith (except as aforesaid) until receipt of written order to do so.

B. *Engineer's Review*: After receipt of written notice as required by Paragraph 4.03.A, Engineer will promptly review the pertinent condition, determine the necessity of Owner's obtaining additional exploration or tests with respect thereto, and advise Owner in writing (with a copy to Contractor) of Engineer's findings and conclusions.

C. *Possible Price and Times Adjustments:*

1. The Contract Price or the Contract Times, or both, will be equitably adjusted to the extent that the existence of such differing subsurface or physical condition causes an increase or decrease in Contractor's cost of, or time required for, performance of the Work; subject, however, to the following:

   a. such condition must meet any one or more of the categories described in Paragraph 4.03.A; and

   b. with respect to Work that is paid for on a unit price basis, any adjustment in Contract Price will be subject to the provisions of Paragraphs 9.07 and 11.03.

2. Contractor shall not be entitled to any adjustment in the Contract Price or Contract Times if:

   a. Contractor knew of the existence of such conditions at the time Contractor made a final commitment to Owner with respect to Contract Price and Contract Times by the submission of a Bid or becoming bound under a negotiated contract; or

   b. the existence of such condition could reasonably have been discovered or revealed as a result of any examination, investigation, exploration, test, or study of the Site and contiguous areas required by the Bidding Requirements or Contract Documents to be conducted by or for Contractor prior to Contractor's making such final commitment; or

   c. Contractor failed to give the written notice as required by Paragraph 4.03.A.

3. If Owner and Contractor are unable to agree on entitlement to or on the amount or extent, if any, of any adjustment in the Contract Price or Contract Times, or both, a Claim may be made therefor as provided in Paragraph 10.05. However, neither Owner or Engineer, or any of their officers, directors, members, partners, employees, agents, consultants, or subcontractors shall be liable to Contractor for any claims, costs, losses, or damages (including but not limited to all fees and charges of engineers, architects, attorneys, and other

Copyright © 2007 National Society of Professional Engineers for EJCDC. All rights reserved.

professionals and all court or arbitration or other dispute resolution costs) sustained by Contractor on or in connection with any other project or anticipated project.

4.04 *Underground Facilities*

A. *Shown or Indicated:* The information and data shown or indicated in the Contract Documents with respect to existing Underground Facilities at or contiguous to the Site is based on information and data furnished to Owner or Engineer by the owners of such Underground Facilities, including Owner, or by others. Unless it is otherwise expressly provided in the Supplementary Conditions:

1. Owner and Engineer shall not be responsible for the accuracy or completeness of any such information or data provided by others; and

2. the cost of all of the following will be included in the Contract Price, and Contractor shall have full responsibility for:

   a. reviewing and checking all such information and data;

   b. locating all Underground Facilities shown or indicated in the Contract Documents;

   c. coordination of the Work with the owners of such Underground Facilities, including Owner, during construction; and

   d. the safety and protection of all such Underground Facilities and repairing any damage thereto resulting from the Work.

B. *Not Shown or Indicated:*

1. If an Underground Facility is uncovered or revealed at or contiguous to the Site which was not shown or indicated, or not shown or indicated with reasonable accuracy in the Contract Documents, Contractor shall, promptly after becoming aware thereof and before further disturbing conditions affected thereby or performing any Work in connection therewith (except in an emergency as required by Paragraph 6.16.A), identify the owner of such Underground Facility and give written notice to that owner and to Owner and Engineer. Engineer will promptly review the Underground Facility and determine the extent, if any, to which a change is required in the Contract Documents to reflect and document the consequences of the existence or location of the Underground Facility. During such time, Contractor shall be responsible for the safety and protection of such Underground Facility.

2. If Engineer concludes that a change in the Contract Documents is required, a Work Change Directive or a Change Order will be issued to reflect and document such consequences. An equitable adjustment shall be made in the Contract Price or Contract Times, or both, to the extent that they are attributable to the existence or location of any Underground Facility that was not shown or indicated or not shown or indicated with reasonable accuracy in the Contract Documents and that Contractor did not know of and could not reasonably have been expected to be aware of or to have anticipated. If Owner and Contractor are unable to agree on entitlement to or on the amount or extent, if any, of any such adjustment in Contract

Copyright © 2007 National Society of Professional Engineers for EJCDC. All rights reserved.

Price or Contract Times, Owner or Contractor may make a Claim therefor as provided in Paragraph 10.05.

4.05 *Reference Points*

A. Owner shall provide engineering surveys to establish reference points for construction which in Engineer's judgment are necessary to enable Contractor to proceed with the Work. Contractor shall be responsible for laying out the Work, shall protect and preserve the established reference points and property monuments, and shall make no changes or relocations without the prior written approval of Owner. Contractor shall report to Engineer whenever any reference point or property monument is lost or destroyed or requires relocation because of necessary changes in grades or locations, and shall be responsible for the accurate replacement or relocation of such reference points or property monuments by professionally qualified personnel.

4.06 *Hazardous Environmental Condition at Site*

A. *Reports and Drawings:* The Supplementary Conditions identify those reports and drawings known to Owner relating to Hazardous Environmental Conditions that have been identified at the Site.

B. *Limited Reliance by Contractor on Technical Data Authorized:* Contractor may rely upon the accuracy of the "technical data" contained in such reports and drawings, but such reports and drawings are not Contract Documents. Such "technical data" is identified in the Supplementary Conditions. Except for such reliance on such "technical data," Contractor may not rely upon or make any claim against Owner or Engineer, or any of their officers, directors, members, partners, employees, agents, consultants, or subcontractors with respect to:

1. the completeness of such reports and drawings for Contractor's purposes, including, but not limited to, any aspects of the means, methods, techniques, sequences and procedures of construction to be employed by Contractor and safety precautions and programs incident thereto; or

2. other data, interpretations, opinions and information contained in such reports or shown or indicated in such drawings; or

3. any Contractor interpretation of or conclusion drawn from any "technical data" or any such other data, interpretations, opinions or information.

C. Contractor shall not be responsible for any Hazardous Environmental Condition uncovered or revealed at the Site which was not shown or indicated in Drawings or Specifications or identified in the Contract Documents to be within the scope of the Work. Contractor shall be responsible for a Hazardous Environmental Condition created with any materials brought to the Site by Contractor, Subcontractors, Suppliers, or anyone else for whom Contractor is responsible.

D. If Contractor encounters a Hazardous Environmental Condition or if Contractor or anyone for whom Contractor is responsible creates a Hazardous Environmental Condition, Contractor shall immediately: (i) secure or otherwise isolate such condition; (ii) stop all Work in connection with such condition and in any area affected thereby (except in an emergency as required by Paragraph 6.16.A); and (iii) notify Owner and Engineer (and promptly thereafter confirm such

Copyright © 2007 National Society of Professional Engineers for EJCDC. All rights reserved.

notice in writing). Owner shall promptly consult with Engineer concerning the necessity for Owner to retain a qualified expert to evaluate such condition or take corrective action, if any. Promptly after consulting with Engineer, Owner shall take such actions as are necessary to permit Owner to timely obtain required permits and provide Contractor the written notice required by Paragraph 4.06.E.

E. Contractor shall not be required to resume Work in connection with such condition or in any affected area until after Owner has obtained any required permits related thereto and delivered written notice to Contractor: (i) specifying that such condition and any affected area is or has been rendered safe for the resumption of Work; or (ii) specifying any special conditions under which such Work may be resumed safely. If Owner and Contractor cannot agree as to entitlement to or on the amount or extent, if any, of any adjustment in Contract Price or Contract Times, or both, as a result of such Work stoppage or such special conditions under which Work is agreed to be resumed by Contractor, either party may make a Claim therefor as provided in Paragraph 10.05.

F. If after receipt of such written notice Contractor does not agree to resume such Work based on a reasonable belief it is unsafe, or does not agree to resume such Work under such special conditions, then Owner may order the portion of the Work that is in the area affected by such condition to be deleted from the Work. If Owner and Contractor cannot agree as to entitlement to or on the amount or extent, if any, of an adjustment in Contract Price or Contract Times as a result of deleting such portion of the Work, then either party may make a Claim therefor as provided in Paragraph 10.05. Owner may have such deleted portion of the Work performed by Owner's own forces or others in accordance with Article 7.

G. To the fullest extent permitted by Laws and Regulations, Owner shall indemnify and hold harmless Contractor, Subcontractors, and Engineer, and the officers, directors, members, partners, employees, agents, consultants, and subcontractors of each and any of them from and against all claims, costs, losses, and damages (including but not limited to all fees and charges of engineers, architects, attorneys, and other professionals and all court or arbitration or other dispute resolution costs) arising out of or relating to a Hazardous Environmental Condition, provided that such Hazardous Environmental Condition: (i) was not shown or indicated in the Drawings or Specifications or identified in the Contract Documents to be included within the scope of the Work, and (ii) was not created by Contractor or by anyone for whom Contractor is responsible. Nothing in this Paragraph 4.06.G shall obligate Owner to indemnify any individual or entity from and against the consequences of that individual's or entity's own negligence.

H. To the fullest extent permitted by Laws and Regulations, Contractor shall indemnify and hold harmless Owner and Engineer, and the officers, directors, members, partners, employees, agents, consultants, and subcontractors of each and any of them from and against all claims, costs, losses, and damages (including but not limited to all fees and charges of engineers, architects, attorneys, and other professionals and all court or arbitration or other dispute resolution costs) arising out of or relating to a Hazardous Environmental Condition created by Contractor or by anyone for whom Contractor is responsible. Nothing in this Paragraph 4.06.H shall obligate Contractor to indemnify any individual or entity from and against the consequences of that individual's or entity's own negligence.

Copyright © 2007 National Society of Professional Engineers for EJCDC. All rights reserved.

I. The provisions of Paragraphs 4.02, 4.03, and 4.04 do not apply to a Hazardous Environmental Condition uncovered or revealed at the Site.

ARTICLE 5 – BONDS AND INSURANCE

5.01 *Performance, Payment, and Other Bonds*

A. Contractor shall furnish performance and payment bonds, each in an amount at least equal to the Contract Price as security for the faithful performance and payment of all of Contractor's obligations under the Contract Documents. These bonds shall remain in effect until one year after the date when final payment becomes due or until completion of the correction period specified in Paragraph 13.07, whichever is later, except as provided otherwise by Laws or Regulations or by the Contract Documents. Contractor shall also furnish such other bonds as are required by the Contract Documents.

B. All bonds shall be in the form prescribed by the Contract Documents except as provided otherwise by Laws or Regulations, and shall be executed by such sureties as are named in the list of "Companies Holding Certificates of Authority as Acceptable Sureties on Federal Bonds and as Acceptable Reinsuring Companies" as published in Circular 570 (amended) by the Financial Management Service, Surety Bond Branch, U.S. Department of the Treasury. All bonds signed by an agent or attorney-in-fact must be accompanied by a certified copy of that individual's authority to bind the surety. The evidence of authority shall show that it is effective on the date the agent or attorney-in-fact signed each bond.

C. If the surety on any bond furnished by Contractor is declared bankrupt or becomes insolvent or its right to do business is terminated in any state where any part of the Project is located or it ceases to meet the requirements of Paragraph 5.01.B, Contractor shall promptly notify Owner and Engineer and shall, within 20 days after the event giving rise to such notification, provide another bond and surety, both of which shall comply with the requirements of Paragraphs 5.01.B and 5.02.

5.02 *Licensed Sureties and Insurers*

A. All bonds and insurance required by the Contract Documents to be purchased and maintained by Owner or Contractor shall be obtained from surety or insurance companies that are duly licensed or authorized in the jurisdiction in which the Project is located to issue bonds or insurance policies for the limits and coverages so required. Such surety and insurance companies shall also meet such additional requirements and qualifications as may be provided in the Supplementary Conditions.

5.03 *Certificates of Insurance*

A. Contractor shall deliver to Owner, with copies to each additional insured and loss payee identified in the Supplementary Conditions, certificates of insurance (and other evidence of insurance requested by Owner or any other additional insured) which Contractor is required to purchase and maintain.

B. Owner shall deliver to Contractor, with copies to each additional insured and loss payee identified in the Supplementary Conditions, certificates of insurance (and other evidence of

Copyright © 2007 National Society of Professional Engineers for EJCDC. All rights reserved.

insurance requested by Contractor or any other additional insured) which Owner is required to purchase and maintain.

C. Failure of Owner to demand such certificates or other evidence of Contractor's full compliance with these insurance requirements or failure of Owner to identify a deficiency in compliance from the evidence provided shall not be construed as a waiver of Contractor's obligation to maintain such insurance.

D. Owner does not represent that insurance coverage and limits established in this Contract necessarily will be adequate to protect Contractor.

E. The insurance and insurance limits required herein shall not be deemed as a limitation on Contractor's liability under the indemnities granted to Owner in the Contract Documents.

5.04 *Contractor's Insurance*

A. Contractor shall purchase and maintain such insurance as is appropriate for the Work being performed and as will provide protection from claims set forth below which may arise out of or result from Contractor's performance of the Work and Contractor's other obligations under the Contract Documents, whether it is to be performed by Contractor, any Subcontractor or Supplier, or by anyone directly or indirectly employed by any of them to perform any of the Work, or by anyone for whose acts any of them may be liable:

1. claims under workers' compensation, disability benefits, and other similar employee benefit acts;

2. claims for damages because of bodily injury, occupational sickness or disease, or death of Contractor's employees;

3. claims for damages because of bodily injury, sickness or disease, or death of any person other than Contractor's employees;

4. claims for damages insured by reasonably available personal injury liability coverage which are sustained:

   a. by any person as a result of an offense directly or indirectly related to the employment of such person by Contractor, or

   b. by any other person for any other reason;

5. claims for damages, other than to the Work itself, because of injury to or destruction of tangible property wherever located, including loss of use resulting therefrom; and

6. claims for damages because of bodily injury or death of any person or property damage arising out of the ownership, maintenance or use of any motor vehicle.

B. The policies of insurance required by this Paragraph 5.04 shall:

Copyright © 2007 National Society of Professional Engineers for EJCDC. All rights reserved.

1. with respect to insurance required by Paragraphs 5.04.A.3 through 5.04.A.6 inclusive, be written on an occurrence basis, include as additional insureds (subject to any customary exclusion regarding professional liability) Owner and Engineer, and any other individuals or entities identified in the Supplementary Conditions, all of whom shall be listed as additional insureds, and include coverage for the respective officers, directors, members, partners, employees, agents, consultants, and subcontractors of each and any of all such additional insureds, and the insurance afforded to these additional insureds shall provide primary coverage for all claims covered thereby;

2. include at least the specific coverages and be written for not less than the limits of liability provided in the Supplementary Conditions or required by Laws or Regulations, whichever is greater;

3. include contractual liability insurance covering Contractor's indemnity obligations under Paragraphs 6.11 and 6.20;

4. contain a provision or endorsement that the coverage afforded will not be canceled, materially changed or renewal refused until at least 30 days prior written notice has been given to Owner and Contractor and to each other additional insured identified in the Supplementary Conditions to whom a certificate of insurance has been issued (and the certificates of insurance furnished by the Contractor pursuant to Paragraph 5.03 will so provide);

5. remain in effect at least until final payment and at all times thereafter when Contractor may be correcting, removing, or replacing defective Work in accordance with Paragraph 13.07; and

6. include completed operations coverage:

    a. Such insurance shall remain in effect for two years after final payment.

    b. Contractor shall furnish Owner and each other additional insured identified in the Supplementary Conditions, to whom a certificate of insurance has been issued, evidence satisfactory to Owner and any such additional insured of continuation of such insurance at final payment and one year thereafter.

5.05 *Owner's Liability Insurance*

A. In addition to the insurance required to be provided by Contractor under Paragraph 5.04, Owner, at Owner's option, may purchase and maintain at Owner's expense Owner's own liability insurance as will protect Owner against claims which may arise from operations under the Contract Documents.

5.06 *Property Insurance*

A. Unless otherwise provided in the Supplementary Conditions, Owner shall purchase and maintain property insurance upon the Work at the Site in the amount of the full replacement cost thereof (subject to such deductible amounts as may be provided in the Supplementary Conditions or required by Laws and Regulations). This insurance shall:

Copyright © 2007 National Society of Professional Engineers for EJCDC. All rights reserved.

1. include the interests of Owner, Contractor, Subcontractors, and Engineer, and any other individuals or entities identified in the Supplementary Conditions, and the officers, directors, members, partners, employees, agents, consultants, and subcontractors of each and any of them, each of whom is deemed to have an insurable interest and shall be listed as a loss payee;

2. be written on a Builder's Risk "all-risk" policy form that shall at least include insurance for physical loss or damage to the Work, temporary buildings, falsework, and materials and equipment in transit, and shall insure against at least the following perils or causes of loss: fire, lightning, extended coverage, theft, vandalism and malicious mischief, earthquake, collapse, debris removal, demolition occasioned by enforcement of Laws and Regulations, water damage (other than that caused by flood), and such other perils or causes of loss as may be specifically required by the Supplementary Conditions.

3. include expenses incurred in the repair or replacement of any insured property (including but not limited to fees and charges of engineers and architects);

4. cover materials and equipment stored at the Site or at another location that was agreed to in writing by Owner prior to being incorporated in the Work, provided that such materials and equipment have been included in an Application for Payment recommended by Engineer;

5. allow for partial utilization of the Work by Owner;

6. include testing and startup; and

7. be maintained in effect until final payment is made unless otherwise agreed to in writing by Owner, Contractor, and Engineer with 30 days written notice to each other loss payee to whom a certificate of insurance has been issued.

B. Owner shall purchase and maintain such equipment breakdown insurance or additional property insurance as may be required by the Supplementary Conditions or Laws and Regulations which will include the interests of Owner, Contractor, Subcontractors, and Engineer, and any other individuals or entities identified in the Supplementary Conditions, and the officers, directors, members, partners, employees, agents, consultants and subcontractors of each and any of them, each of whom is deemed to have an insurable interest and shall be listed as a loss payee.

C. All the policies of insurance (and the certificates or other evidence thereof) required to be purchased and maintained in accordance with this Paragraph 5.06 will contain a provision or endorsement that the coverage afforded will not be canceled or materially changed or renewal refused until at least 30 days prior written notice has been given to Owner and Contractor and to each other loss payee to whom a certificate of insurance has been issued and will contain waiver provisions in accordance with Paragraph 5.07.

D. Owner shall not be responsible for purchasing and maintaining any property insurance specified in this Paragraph 5.06 to protect the interests of Contractor, Subcontractors, or others in the Work to the extent of any deductible amounts that are identified in the Supplementary Conditions. The risk of loss within such identified deductible amount will be borne by Contractor, Subcontractors, or others suffering any such loss, and if any of them wishes property

Copyright © 2007 National Society of Professional Engineers for EJCDC. All rights reserved.

insurance coverage within the limits of such amounts, each may purchase and maintain it at the purchaser's own expense.

E. If Contractor requests in writing that other special insurance be included in the property insurance policies provided under this Paragraph 5.06, Owner shall, if possible, include such insurance, and the cost thereof will be charged to Contractor by appropriate Change Order. Prior to commencement of the Work at the Site, Owner shall in writing advise Contractor whether or not such other insurance has been procured by Owner.

5.07 *Waiver of Rights*

A. Owner and Contractor intend that all policies purchased in accordance with Paragraph 5.06 will protect Owner, Contractor, Subcontractors, and Engineer, and all other individuals or entities identified in the Supplementary Conditions as loss payees (and the officers, directors, members, partners, employees, agents, consultants, and subcontractors of each and any of them) in such policies and will provide primary coverage for all losses and damages caused by the perils or causes of loss covered thereby. All such policies shall contain provisions to the effect that in the event of payment of any loss or damage the insurers will have no rights of recovery against any of the insureds or loss payees thereunder. Owner and Contractor waive all rights against each other and their respective officers, directors, members, partners, employees, agents, consultants and subcontractors of each and any of them for all losses and damages caused by, arising out of or resulting from any of the perils or causes of loss covered by such policies and any other property insurance applicable to the Work; and, in addition, waive all such rights against Subcontractors and Engineer, and all other individuals or entities identified in the Supplementary Conditions as loss payees (and the officers, directors, members, partners, employees, agents, consultants, and subcontractors of each and any of them) under such policies for losses and damages so caused. None of the above waivers shall extend to the rights that any party making such waiver may have to the proceeds of insurance held by Owner as trustee or otherwise payable under any policy so issued.

B. Owner waives all rights against Contractor, Subcontractors, and Engineer, and the officers, directors, members, partners, employees, agents, consultants and subcontractors of each and any of them for:

1. loss due to business interruption, loss of use, or other consequential loss extending beyond direct physical loss or damage to Owner's property or the Work caused by, arising out of, or resulting from fire or other perils whether or not insured by Owner; and

2. loss or damage to the completed Project or part thereof caused by, arising out of, or resulting from fire or other insured peril or cause of loss covered by any property insurance maintained on the completed Project or part thereof by Owner during partial utilization pursuant to Paragraph 14.05, after Substantial Completion pursuant to Paragraph 14.04, or after final payment pursuant to Paragraph 14.07.

C. Any insurance policy maintained by Owner covering any loss, damage or consequential loss referred to in Paragraph 5.07.B shall contain provisions to the effect that in the event of payment of any such loss, damage, or consequential loss, the insurers will have no rights of recovery

Copyright © 2007 National Society of Professional Engineers for EJCDC. All rights reserved.

against Contractor, Subcontractors, or Engineer, and the officers, directors, members, partners, employees, agents, consultants and subcontractors of each and any of them.

5.08 *Receipt and Application of Insurance Proceeds*

A. Any insured loss under the policies of insurance required by Paragraph 5.06 will be adjusted with Owner and made payable to Owner as fiduciary for the loss payees, as their interests may appear, subject to the requirements of any applicable mortgage clause and of Paragraph 5.08.B. Owner shall deposit in a separate account any money so received and shall distribute it in accordance with such agreement as the parties in interest may reach. If no other special agreement is reached, the damaged Work shall be repaired or replaced, the moneys so received applied on account thereof, and the Work and the cost thereof covered by an appropriate Change Order.

B. Owner as fiduciary shall have power to adjust and settle any loss with the insurers unless one of the parties in interest shall object in writing within 15 days after the occurrence of loss to Owner's exercise of this power. If such objection be made, Owner as fiduciary shall make settlement with the insurers in accordance with such agreement as the parties in interest may reach. If no such agreement among the parties in interest is reached, Owner as fiduciary shall adjust and settle the loss with the insurers and, if required in writing by any party in interest, Owner as fiduciary shall give bond for the proper performance of such duties.

5.09 *Acceptance of Bonds and Insurance; Option to Replace*

A. If either Owner or Contractor has any objection to the coverage afforded by or other provisions of the bonds or insurance required to be purchased and maintained by the other party in accordance with Article 5 on the basis of non-conformance with the Contract Documents, the objecting party shall so notify the other party in writing within 10 days after receipt of the certificates (or other evidence requested) required by Paragraph 2.01.B. Owner and Contractor shall each provide to the other such additional information in respect of insurance provided as the other may reasonably request. If either party does not purchase or maintain all of the bonds and insurance required of such party by the Contract Documents, such party shall notify the other party in writing of such failure to purchase prior to the start of the Work, or of such failure to maintain prior to any change in the required coverage. Without prejudice to any other right or remedy, the other party may elect to obtain equivalent bonds or insurance to protect such other party's interests at the expense of the party who was required to provide such coverage, and a Change Order shall be issued to adjust the Contract Price accordingly.

5.10 *Partial Utilization, Acknowledgment of Property Insurer*

A. If Owner finds it necessary to occupy or use a portion or portions of the Work prior to Substantial Completion of all the Work as provided in Paragraph 14.05, no such use or occupancy shall commence before the insurers providing the property insurance pursuant to Paragraph 5.06 have acknowledged notice thereof and in writing effected any changes in coverage necessitated thereby. The insurers providing the property insurance shall consent by endorsement on the policy or policies, but the property insurance shall not be canceled or permitted to lapse on account of any such partial use or occupancy.

Copyright © 2007 National Society of Professional Engineers for EJCDC. All rights reserved.

ARTICLE 6 – CONTRACTOR'S RESPONSIBILITIES

6.01 *Supervision and Superintendence*

A. Contractor shall supervise, inspect, and direct the Work competently and efficiently, devoting such attention thereto and applying such skills and expertise as may be necessary to perform the Work in accordance with the Contract Documents. Contractor shall be solely responsible for the means, methods, techniques, sequences, and procedures of construction. Contractor shall not be responsible for the negligence of Owner or Engineer in the design or specification of a specific means, method, technique, sequence, or procedure of construction which is shown or indicated in and expressly required by the Contract Documents.

B. At all times during the progress of the Work, Contractor shall assign a competent resident superintendent who shall not be replaced without written notice to Owner and Engineer except under extraordinary circumstances.

6.02 *Labor; Working Hours*

A. Contractor shall provide competent, suitably qualified personnel to survey and lay out the Work and perform construction as required by the Contract Documents. Contractor shall at all times maintain good discipline and order at the Site.

B. Except as otherwise required for the safety or protection of persons or the Work or property at the Site or adjacent thereto, and except as otherwise stated in the Contract Documents, all Work at the Site shall be performed during regular working hours. Contractor will not permit the performance of Work on a Saturday, Sunday, or any legal holiday without Owner's written consent (which will not be unreasonably withheld) given after prior written notice to Engineer.

6.03 *Services, Materials, and Equipment*

A. Unless otherwise specified in the Contract Documents, Contractor shall provide and assume full responsibility for all services, materials, equipment, labor, transportation, construction equipment and machinery, tools, appliances, fuel, power, light, heat, telephone, water, sanitary facilities, temporary facilities, and all other facilities and incidentals necessary for the performance, testing, start-up, and completion of the Work.

B. All materials and equipment incorporated into the Work shall be as specified or, if not specified, shall be of good quality and new, except as otherwise provided in the Contract Documents. All special warranties and guarantees required by the Specifications shall expressly run to the benefit of Owner. If required by Engineer, Contractor shall furnish satisfactory evidence (including reports of required tests) as to the source, kind, and quality of materials and equipment.

C. All materials and equipment shall be stored, applied, installed, connected, erected, protected, used, cleaned, and conditioned in accordance with instructions of the applicable Supplier, except as otherwise may be provided in the Contract Documents.

Copyright © 2007 National Society of Professional Engineers for EJCDC. All rights reserved.

6.04 *Progress Schedule*

A. Contractor shall adhere to the Progress Schedule established in accordance with Paragraph 2.07 as it may be adjusted from time to time as provided below.

1. Contractor shall submit to Engineer for acceptance (to the extent indicated in Paragraph 2.07) proposed adjustments in the Progress Schedule that will not result in changing the Contract Times. Such adjustments will comply with any provisions of the General Requirements applicable thereto.

2. Proposed adjustments in the Progress Schedule that will change the Contract Times shall be submitted in accordance with the requirements of Article 12. Adjustments in Contract Times may only be made by a Change Order.

6.05 *Substitutes and "Or-Equals"*

A. Whenever an item of material or equipment is specified or described in the Contract Documents by using the name of a proprietary item or the name of a particular Supplier, the specification or description is intended to establish the type, function, appearance, and quality required. Unless the specification or description contains or is followed by words reading that no like, equivalent, or "or-equal" item or no substitution is permitted, other items of material or equipment or material or equipment of other Suppliers may be submitted to Engineer for review under the circumstances described below.

1. *"Or-Equal" Items:* If in Engineer's sole discretion an item of material or equipment proposed by Contractor is functionally equal to that named and sufficiently similar so that no change in related Work will be required, it may be considered by Engineer as an "or-equal" item, in which case review and approval of the proposed item may, in Engineer's sole discretion, be accomplished without compliance with some or all of the requirements for approval of proposed substitute items. For the purposes of this Paragraph 6.05.A.1, a proposed item of material or equipment will be considered functionally equal to an item so named if:

a. in the exercise of reasonable judgment Engineer determines that:

1) it is at least equal in materials of construction, quality, durability, appearance, strength, and design characteristics;

2) it will reliably perform at least equally well the function and achieve the results imposed by the design concept of the completed Project as a functioning whole; and

3) it has a proven record of performance and availability of responsive service.

b. Contractor certifies that, if approved and incorporated into the Work:

1) there will be no increase in cost to the Owner or increase in Contract Times; and

2) it will conform substantially to the detailed requirements of the item named in the Contract Documents.

Copyright © 2007 National Society of Professional Engineers for EJCDC. All rights reserved.

2. *Substitute Items:*

   a. If in Engineer's sole discretion an item of material or equipment proposed by Contractor does not qualify as an "or-equal" item under Paragraph 6.05.A.1, it will be considered a proposed substitute item.

   b. Contractor shall submit sufficient information as provided below to allow Engineer to determine if the item of material or equipment proposed is essentially equivalent to that named and an acceptable substitute therefor. Requests for review of proposed substitute items of material or equipment will not be accepted by Engineer from anyone other than Contractor.

   c. The requirements for review by Engineer will be as set forth in Paragraph 6.05.A.2.d, as supplemented by the General Requirements, and as Engineer may decide is appropriate under the circumstances.

   d. Contractor shall make written application to Engineer for review of a proposed substitute item of material or equipment that Contractor seeks to furnish or use. The application:

      1) shall certify that the proposed substitute item will:

         a) perform adequately the functions and achieve the results called for by the general design,

         b) be similar in substance to that specified, and

         c) be suited to the same use as that specified;

      2) will state:

         a) the extent, if any, to which the use of the proposed substitute item will prejudice Contractor's achievement of Substantial Completion on time,

         b) whether use of the proposed substitute item in the Work will require a change in any of the Contract Documents (or in the provisions of any other direct contract with Owner for other work on the Project) to adapt the design to the proposed substitute item, and

         c) whether incorporation or use of the proposed substitute item in connection with the Work is subject to payment of any license fee or royalty;

      3) will identify:

         a) all variations of the proposed substitute item from that specified, and

         b) available engineering, sales, maintenance, repair, and replacement services; and

      4) shall contain an itemized estimate of all costs or credits that will result directly or indirectly from use of such substitute item, including costs of redesign and claims of other contractors affected by any resulting change.

Copyright © 2007 National Society of Professional Engineers for EJCDC. All rights reserved.

B. *Substitute Construction Methods or Procedures:* If a specific means, method, technique, sequence, or procedure of construction is expressly required by the Contract Documents, Contractor may furnish or utilize a substitute means, method, technique, sequence, or procedure of construction approved by Engineer. Contractor shall submit sufficient information to allow Engineer, in Engineer's sole discretion, to determine that the substitute proposed is equivalent to that expressly called for by the Contract Documents. The requirements for review by Engineer will be similar to those provided in Paragraph 6.05.A.2.

C. *Engineer's Evaluation:* Engineer will be allowed a reasonable time within which to evaluate each proposal or submittal made pursuant to Paragraphs 6.05.A and 6.05.B. Engineer may require Contractor to furnish additional data about the proposed substitute item. Engineer will be the sole judge of acceptability. No "or equal" or substitute will be ordered, installed or utilized until Engineer's review is complete, which will be evidenced by a Change Order in the case of a substitute and an approved Shop Drawing for an "or equal." Engineer will advise Contractor in writing of any negative determination.

D. *Special Guarantee:* Owner may require Contractor to furnish at Contractor's expense a special performance guarantee or other surety with respect to any substitute.

E. *Engineer's Cost Reimbursement*: Engineer will record Engineer's costs in evaluating a substitute proposed or submitted by Contractor pursuant to Paragraphs 6.05.A.2 and 6.05.B. Whether or not Engineer approves a substitute so proposed or submitted by Contractor, Contractor shall reimburse Owner for the reasonable charges of Engineer for evaluating each such proposed substitute. Contractor shall also reimburse Owner for the reasonable charges of Engineer for making changes in the Contract Documents (or in the provisions of any other direct contract with Owner) resulting from the acceptance of each proposed substitute.

F. *Contractor's Expense*: Contractor shall provide all data in support of any proposed substitute or "or-equal" at Contractor's expense.

6.06 *Concerning Subcontractors, Suppliers, and Others*

A. Contractor shall not employ any Subcontractor, Supplier, or other individual or entity (including those acceptable to Owner as indicated in Paragraph 6.06.B), whether initially or as a replacement, against whom Owner may have reasonable objection. Contractor shall not be required to employ any Subcontractor, Supplier, or other individual or entity to furnish or perform any of the Work against whom Contractor has reasonable objection.

B. If the Supplementary Conditions require the identity of certain Subcontractors, Suppliers, or other individuals or entities to be submitted to Owner in advance for acceptance by Owner by a specified date prior to the Effective Date of the Agreement, and if Contractor has submitted a list thereof in accordance with the Supplementary Conditions, Owner's acceptance (either in writing or by failing to make written objection thereto by the date indicated for acceptance or objection in the Bidding Documents or the Contract Documents) of any such Subcontractor, Supplier, or other individual or entity so identified may be revoked on the basis of reasonable objection after due investigation. Contractor shall submit an acceptable replacement for the rejected Subcontractor, Supplier, or other individual or entity, and the Contract Price will be adjusted by the difference in the cost occasioned by such replacement, and an appropriate Change Order will

Copyright © 2007 National Society of Professional Engineers for EJCDC. All rights reserved.

be issued. No acceptance by Owner of any such Subcontractor, Supplier, or other individual or entity, whether initially or as a replacement, shall constitute a waiver of any right of Owner or Engineer to reject defective Work.

C. Contractor shall be fully responsible to Owner and Engineer for all acts and omissions of the Subcontractors, Suppliers, and other individuals or entities performing or furnishing any of the Work just as Contractor is responsible for Contractor's own acts and omissions. Nothing in the Contract Documents:

1. shall create for the benefit of any such Subcontractor, Supplier, or other individual or entity any contractual relationship between Owner or Engineer and any such Subcontractor, Supplier or other individual or entity; nor

2. shall create any obligation on the part of Owner or Engineer to pay or to see to the payment of any moneys due any such Subcontractor, Supplier, or other individual or entity except as may otherwise be required by Laws and Regulations.

D. Contractor shall be solely responsible for scheduling and coordinating the Work of Subcontractors, Suppliers, and other individuals or entities performing or furnishing any of the Work under a direct or indirect contract with Contractor.

E. Contractor shall require all Subcontractors, Suppliers, and such other individuals or entities performing or furnishing any of the Work to communicate with Engineer through Contractor.

F. The divisions and sections of the Specifications and the identifications of any Drawings shall not control Contractor in dividing the Work among Subcontractors or Suppliers or delineating the Work to be performed by any specific trade.

G. All Work performed for Contractor by a Subcontractor or Supplier will be pursuant to an appropriate agreement between Contractor and the Subcontractor or Supplier which specifically binds the Subcontractor or Supplier to the applicable terms and conditions of the Contract Documents for the benefit of Owner and Engineer. Whenever any such agreement is with a Subcontractor or Supplier who is listed as a loss payee on the property insurance provided in Paragraph 5.06, the agreement between the Contractor and the Subcontractor or Supplier will contain provisions whereby the Subcontractor or Supplier waives all rights against Owner, Contractor, Engineer, and all other individuals or entities identified in the Supplementary Conditions to be listed as insureds or loss payees (and the officers, directors, members, partners, employees, agents, consultants, and subcontractors of each and any of them) for all losses and damages caused by, arising out of, relating to, or resulting from any of the perils or causes of loss covered by such policies and any other property insurance applicable to the Work. If the insurers on any such policies require separate waiver forms to be signed by any Subcontractor or Supplier, Contractor will obtain the same.

6.07 *Patent Fees and Royalties*

A. Contractor shall pay all license fees and royalties and assume all costs incident to the use in the performance of the Work or the incorporation in the Work of any invention, design, process, product, or device which is the subject of patent rights or copyrights held by others. If a particular invention, design, process, product, or device is specified in the Contract Documents

Copyright © 2007 National Society of Professional Engineers for EJCDC. All rights reserved.

for use in the performance of the Work and if, to the actual knowledge of Owner or Engineer, its use is subject to patent rights or copyrights calling for the payment of any license fee or royalty to others, the existence of such rights shall be disclosed by Owner in the Contract Documents.

B. To the fullest extent permitted by Laws and Regulations, Owner shall indemnify and hold harmless Contractor, and its officers, directors, members, partners, employees, agents, consultants, and subcontractors from and against all claims, costs, losses, and damages (including but not limited to all fees and charges of engineers, architects, attorneys, and other professionals, and all court or arbitration or other dispute resolution costs) arising out of or relating to any infringement of patent rights or copyrights incident to the use in the performance of the Work or resulting from the incorporation in the Work of any invention, design, process, product, or device specified in the Contract Documents, but not identified as being subject to payment of any license fee or royalty to others required by patent rights or copyrights.

C. To the fullest extent permitted by Laws and Regulations, Contractor shall indemnify and hold harmless Owner and Engineer, and the officers, directors, members, partners, employees, agents, consultants and subcontractors of each and any of them from and against all claims, costs, losses, and damages (including but not limited to all fees and charges of engineers, architects, attorneys, and other professionals and all court or arbitration or other dispute resolution costs) arising out of or relating to any infringement of patent rights or copyrights incident to the use in the performance of the Work or resulting from the incorporation in the Work of any invention, design, process, product, or device not specified in the Contract Documents.

6.08 *Permits*

A. Unless otherwise provided in the Supplementary Conditions, Contractor shall obtain and pay for all construction permits and licenses. Owner shall assist Contractor, when necessary, in obtaining such permits and licenses. Contractor shall pay all governmental charges and inspection fees necessary for the prosecution of the Work which are applicable at the time of opening of Bids, or, if there are no Bids, on the Effective Date of the Agreement. Owner shall pay all charges of utility owners for connections for providing permanent service to the Work.

6.09 *Laws and Regulations*

A. Contractor shall give all notices required by and shall comply with all Laws and Regulations applicable to the performance of the Work. Except where otherwise expressly required by applicable Laws and Regulations, neither Owner nor Engineer shall be responsible for monitoring Contractor's compliance with any Laws or Regulations.

B. If Contractor performs any Work knowing or having reason to know that it is contrary to Laws or Regulations, Contractor shall bear all claims, costs, losses, and damages (including but not limited to all fees and charges of engineers, architects, attorneys, and other professionals and all court or arbitration or other dispute resolution costs) arising out of or relating to such Work. However, it shall not be Contractor's responsibility to make certain that the Specifications and Drawings are in accordance with Laws and Regulations, but this shall not relieve Contractor of Contractor's obligations under Paragraph 3.03.

Copyright © 2007 National Society of Professional Engineers for EJCDC. All rights reserved.

C. Changes in Laws or Regulations not known at the time of opening of Bids (or, on the Effective Date of the Agreement if there were no Bids) having an effect on the cost or time of performance of the Work shall be the subject of an adjustment in Contract Price or Contract Times. If Owner and Contractor are unable to agree on entitlement to or on the amount or extent, if any, of any such adjustment, a Claim may be made therefor as provided in Paragraph 10.05.

6.10 *Taxes*

A. Contractor shall pay all sales, consumer, use, and other similar taxes required to be paid by Contractor in accordance with the Laws and Regulations of the place of the Project which are applicable during the performance of the Work.

6.11 *Use of Site and Other Areas*

A. *Limitation on Use of Site and Other Areas:*

1. Contractor shall confine construction equipment, the storage of materials and equipment, and the operations of workers to the Site and other areas permitted by Laws and Regulations, and shall not unreasonably encumber the Site and other areas with construction equipment or other materials or equipment. Contractor shall assume full responsibility for any damage to any such land or area, or to the owner or occupant thereof, or of any adjacent land or areas resulting from the performance of the Work.

2. Should any claim be made by any such owner or occupant because of the performance of the Work, Contractor shall promptly settle with such other party by negotiation or otherwise resolve the claim by arbitration or other dispute resolution proceeding or at law.

3. To the fullest extent permitted by Laws and Regulations, Contractor shall indemnify and hold harmless Owner and Engineer, and the officers, directors, members, partners, employees, agents, consultants and subcontractors of each and any of them from and against all claims, costs, losses, and damages (including but not limited to all fees and charges of engineers, architects, attorneys, and other professionals and all court or arbitration or other dispute resolution costs) arising out of or relating to any claim or action, legal or equitable, brought by any such owner or occupant against Owner, Engineer, or any other party indemnified hereunder to the extent caused by or based upon Contractor's performance of the Work.

B. *Removal of Debris During Performance of the Work:* During the progress of the Work Contractor shall keep the Site and other areas free from accumulations of waste materials, rubbish, and other debris. Removal and disposal of such waste materials, rubbish, and other debris shall conform to applicable Laws and Regulations.

C. *Cleaning:* Prior to Substantial Completion of the Work Contractor shall clean the Site and the Work and make it ready for utilization by Owner. At the completion of the Work Contractor shall remove from the Site all tools, appliances, construction equipment and machinery, and surplus materials and shall restore to original condition all property not designated for alteration by the Contract Documents.

Copyright © 2007 National Society of Professional Engineers for EJCDC. All rights reserved.

D. *Loading Structures:* Contractor shall not load nor permit any part of any structure to be loaded in any manner that will endanger the structure, nor shall Contractor subject any part of the Work or adjacent property to stresses or pressures that will endanger it.

6.12 *Record Documents*

A. Contractor shall maintain in a safe place at the Site one record copy of all Drawings, Specifications, Addenda, Change Orders, Work Change Directives, Field Orders, and written interpretations and clarifications in good order and annotated to show changes made during construction. These record documents together with all approved Samples and a counterpart of all approved Shop Drawings will be available to Engineer for reference. Upon completion of the Work, these record documents, Samples, and Shop Drawings will be delivered to Engineer for Owner.

6.13 *Safety and Protection*

A. Contractor shall be solely responsible for initiating, maintaining and supervising all safety precautions and programs in connection with the Work. Such responsibility does not relieve Subcontractors of their responsibility for the safety of persons or property in the performance of their work, nor for compliance with applicable safety Laws and Regulations. Contractor shall take all necessary precautions for the safety of, and shall provide the necessary protection to prevent damage, injury or loss to:

1. all persons on the Site or who may be affected by the Work;

2. all the Work and materials and equipment to be incorporated therein, whether in storage on or off the Site; and

3. other property at the Site or adjacent thereto, including trees, shrubs, lawns, walks, pavements, roadways, structures, utilities, and Underground Facilities not designated for removal, relocation, or replacement in the course of construction.

B. Contractor shall comply with all applicable Laws and Regulations relating to the safety of persons or property, or to the protection of persons or property from damage, injury, or loss; and shall erect and maintain all necessary safeguards for such safety and protection. Contractor shall notify owners of adjacent property and of Underground Facilities and other utility owners when prosecution of the Work may affect them, and shall cooperate with them in the protection, removal, relocation, and replacement of their property.

C. Contractor shall comply with the applicable requirements of Owner's safety programs, if any. The Supplementary Conditions identify any Owner's safety programs that are applicable to the Work.

D. Contractor shall inform Owner and Engineer of the specific requirements of Contractor's safety program with which Owner's and Engineer's employees and representatives must comply while at the Site.

E. All damage, injury, or loss to any property referred to in Paragraph 6.13.A.2 or 6.13.A.3 caused, directly or indirectly, in whole or in part, by Contractor, any Subcontractor, Supplier, or any

Copyright © 2007 National Society of Professional Engineers for EJCDC. All rights reserved.

other individual or entity directly or indirectly employed by any of them to perform any of the Work, or anyone for whose acts any of them may be liable, shall be remedied by Contractor (except damage or loss attributable to the fault of Drawings or Specifications or to the acts or omissions of Owner or Engineer or anyone employed by any of them, or anyone for whose acts any of them may be liable, and not attributable, directly or indirectly, in whole or in part, to the fault or negligence of Contractor or any Subcontractor, Supplier, or other individual or entity directly or indirectly employed by any of them).

F. Contractor's duties and responsibilities for safety and for protection of the Work shall continue until such time as all the Work is completed and Engineer has issued a notice to Owner and Contractor in accordance with Paragraph 14.07.B that the Work is acceptable (except as otherwise expressly provided in connection with Substantial Completion).

6.14 *Safety Representative*

A. Contractor shall designate a qualified and experienced safety representative at the Site whose duties and responsibilities shall be the prevention of accidents and the maintaining and supervising of safety precautions and programs.

6.15 *Hazard Communication Programs*

A. Contractor shall be responsible for coordinating any exchange of material safety data sheets or other hazard communication information required to be made available to or exchanged between or among employers at the Site in accordance with Laws or Regulations.

6.16 *Emergencies*

A. In emergencies affecting the safety or protection of persons or the Work or property at the Site or adjacent thereto, Contractor is obligated to act to prevent threatened damage, injury, or loss. Contractor shall give Engineer prompt written notice if Contractor believes that any significant changes in the Work or variations from the Contract Documents have been caused thereby or are required as a result thereof. If Engineer determines that a change in the Contract Documents is required because of the action taken by Contractor in response to such an emergency, a Work Change Directive or Change Order will be issued.

6.17 *Shop Drawings and Samples*

A. Contractor shall submit Shop Drawings and Samples to Engineer for review and approval in accordance with the accepted Schedule of Submittals (as required by Paragraph 2.07). Each submittal will be identified as Engineer may require.

1. *Shop Drawings:*

a. Submit number of copies specified in the General Requirements.

b. Data shown on the Shop Drawings will be complete with respect to quantities, dimensions, specified performance and design criteria, materials, and similar data to show Engineer the services, materials, and equipment Contractor proposes to provide

Copyright © 2007 National Society of Professional Engineers for EJCDC. All rights reserved.

and to enable Engineer to review the information for the limited purposes required by Paragraph 6.17.D.

2. *Samples:*

   a. Submit number of Samples specified in the Specifications.

   b. Clearly identify each Sample as to material, Supplier, pertinent data such as catalog numbers, the use for which intended and other data as Engineer may require to enable Engineer to review the submittal for the limited purposes required by Paragraph 6.17.D.

B. Where a Shop Drawing or Sample is required by the Contract Documents or the Schedule of Submittals, any related Work performed prior to Engineer's review and approval of the pertinent submittal will be at the sole expense and responsibility of Contractor.

C. *Submittal Procedures:*

1. Before submitting each Shop Drawing or Sample, Contractor shall have:

   a. reviewed and coordinated each Shop Drawing or Sample with other Shop Drawings and Samples and with the requirements of the Work and the Contract Documents;

   b. determined and verified all field measurements, quantities, dimensions, specified performance and design criteria, installation requirements, materials, catalog numbers, and similar information with respect thereto;

   c. determined and verified the suitability of all materials offered with respect to the indicated application, fabrication, shipping, handling, storage, assembly, and installation pertaining to the performance of the Work; and

   d. determined and verified all information relative to Contractor's responsibilities for means, methods, techniques, sequences, and procedures of construction, and safety precautions and programs incident thereto.

2. Each submittal shall bear a stamp or specific written certification that Contractor has satisfied Contractor's obligations under the Contract Documents with respect to Contractor's review and approval of that submittal.

3. With each submittal, Contractor shall give Engineer specific written notice of any variations that the Shop Drawing or Sample may have from the requirements of the Contract Documents. This notice shall be both a written communication separate from the Shop Drawings or Sample submittal; and, in addition, by a specific notation made on each Shop Drawing or Sample submitted to Engineer for review and approval of each such variation.

D. *Engineer's Review:*

1. Engineer will provide timely review of Shop Drawings and Samples in accordance with the Schedule of Submittals acceptable to Engineer. Engineer's review and approval will be only to determine if the items covered by the submittals will, after installation or incorporation in

Copyright © 2007 National Society of Professional Engineers for EJCDC. All rights reserved.

the Work, conform to the information given in the Contract Documents and be compatible with the design concept of the completed Project as a functioning whole as indicated by the Contract Documents.

2. Engineer's review and approval will not extend to means, methods, techniques, sequences, or procedures of construction (except where a particular means, method, technique, sequence, or procedure of construction is specifically and expressly called for by the Contract Documents) or to safety precautions or programs incident thereto. The review and approval of a separate item as such will not indicate approval of the assembly in which the item functions.

3. Engineer's review and approval shall not relieve Contractor from responsibility for any variation from the requirements of the Contract Documents unless Contractor has complied with the requirements of Paragraph 6.17.C.3 and Engineer has given written approval of each such variation by specific written notation thereof incorporated in or accompanying the Shop Drawing or Sample. Engineer's review and approval shall not relieve Contractor from responsibility for complying with the requirements of Paragraph 6.17.C.1.

E. *Resubmittal Procedures:*

1. Contractor shall make corrections required by Engineer and shall return the required number of corrected copies of Shop Drawings and submit, as required, new Samples for review and approval. Contractor shall direct specific attention in writing to revisions other than the corrections called for by Engineer on previous submittals.

6.18 *Continuing the Work*

A. Contractor shall carry on the Work and adhere to the Progress Schedule during all disputes or disagreements with Owner. No Work shall be delayed or postponed pending resolution of any disputes or disagreements, except as permitted by Paragraph 15.04 or as Owner and Contractor may otherwise agree in writing.

6.19 *Contractor's General Warranty and Guarantee*

A. Contractor warrants and guarantees to Owner that all Work will be in accordance with the Contract Documents and will not be defective. Engineer and its officers, directors, members, partners, employees, agents, consultants, and subcontractors shall be entitled to rely on representation of Contractor's warranty and guarantee.

B. Contractor's warranty and guarantee hereunder excludes defects or damage caused by:

1. abuse, modification, or improper maintenance or operation by persons other than Contractor, Subcontractors, Suppliers, or any other individual or entity for whom Contractor is responsible; or

2. normal wear and tear under normal usage.

C. Contractor's obligation to perform and complete the Work in accordance with the Contract Documents shall be absolute. None of the following will constitute an acceptance of Work that is

Copyright © 2007 National Society of Professional Engineers for EJCDC. All rights reserved.

not in accordance with the Contract Documents or a release of Contractor's obligation to perform the Work in accordance with the Contract Documents:

1. observations by Engineer;

2. recommendation by Engineer or payment by Owner of any progress or final payment;

3. the issuance of a certificate of Substantial Completion by Engineer or any payment related thereto by Owner;

4. use or occupancy of the Work or any part thereof by Owner;

5. any review and approval of a Shop Drawing or Sample submittal or the issuance of a notice of acceptability by Engineer;

6. any inspection, test, or approval by others; or

7. any correction of defective Work by Owner.

6.20 *Indemnification*

A. To the fullest extent permitted by Laws and Regulations, Contractor shall indemnify and hold harmless Owner and Engineer, and the officers, directors, members, partners, employees, agents, consultants and subcontractors of each and any of them from and against all claims, costs, losses, and damages (including but not limited to all fees and charges of engineers, architects, attorneys, and other professionals and all court or arbitration or other dispute resolution costs) arising out of or relating to the performance of the Work, provided that any such claim, cost, loss, or damage is attributable to bodily injury, sickness, disease, or death, or to injury to or destruction of tangible property (other than the Work itself), including the loss of use resulting therefrom but only to the extent caused by any negligent act or omission of Contractor, any Subcontractor, any Supplier, or any individual or entity directly or indirectly employed by any of them to perform any of the Work or anyone for whose acts any of them may be liable .

B. In any and all claims against Owner or Engineer or any of their officers, directors, members, partners, employees, agents, consultants, or subcontractors by any employee (or the survivor or personal representative of such employee) of Contractor, any Subcontractor, any Supplier, or any individual or entity directly or indirectly employed by any of them to perform any of the Work, or anyone for whose acts any of them may be liable, the indemnification obligation under Paragraph 6.20.A shall not be limited in any way by any limitation on the amount or type of damages, compensation, or benefits payable by or for Contractor or any such Subcontractor, Supplier, or other individual or entity under workers' compensation acts, disability benefit acts, or other employee benefit acts.

C. The indemnification obligations of Contractor under Paragraph 6.20.A shall not extend to the liability of Engineer and Engineer's officers, directors, members, partners, employees, agents, consultants and subcontractors arising out of:

1. the preparation or approval of, or the failure to prepare or approve maps, Drawings, opinions, reports, surveys, Change Orders, designs, or Specifications; or

Copyright © 2007 National Society of Professional Engineers for EJCDC. All rights reserved.

2. giving directions or instructions, or failing to give them, if that is the primary cause of the injury or damage.

6.21 *Delegation of Professional Design Services*

A. Contractor will not be required to provide professional design services unless such services are specifically required by the Contract Documents for a portion of the Work or unless such services are required to carry out Contractor's responsibilities for construction means, methods, techniques, sequences and procedures. Contractor shall not be required to provide professional services in violation of applicable law.

B. If professional design services or certifications by a design professional related to systems, materials or equipment are specifically required of Contractor by the Contract Documents, Owner and Engineer will specify all performance and design criteria that such services must satisfy. Contractor shall cause such services or certifications to be provided by a properly licensed professional, whose signature and seal shall appear on all drawings, calculations, specifications, certifications, Shop Drawings and other submittals prepared by such professional. Shop Drawings and other submittals related to the Work designed or certified by such professional, if prepared by others, shall bear such professional's written approval when submitted to Engineer.

C. Owner and Engineer shall be entitled to rely upon the adequacy, accuracy and completeness of the services, certifications or approvals performed by such design professionals, provided Owner and Engineer have specified to Contractor all performance and design criteria that such services must satisfy.

D. Pursuant to this Paragraph 6.21, Engineer's review and approval of design calculations and design drawings will be only for the limited purpose of checking for conformance with performance and design criteria given and the design concept expressed in the Contract Documents. Engineer's review and approval of Shop Drawings and other submittals (except design calculations and design drawings) will be only for the purpose stated in Paragraph 6.17.D.1.

E. Contractor shall not be responsible for the adequacy of the performance or design criteria required by the Contract Documents.

ARTICLE 7 – OTHER WORK AT THE SITE

7.01 *Related Work at Site*

A. Owner may perform other work related to the Project at the Site with Owner's employees, or through other direct contracts therefor, or have other work performed by utility owners. If such other work is not noted in the Contract Documents, then:

1. written notice thereof will be given to Contractor prior to starting any such other work; and

2. if Owner and Contractor are unable to agree on entitlement to or on the amount or extent, if any, of any adjustment in the Contract Price or Contract Times that should be allowed as a result of such other work, a Claim may be made therefor as provided in Paragraph 10.05.

Copyright © 2007 National Society of Professional Engineers for EJCDC. All rights reserved.

B. Contractor shall afford each other contractor who is a party to such a direct contract, each utility owner, and Owner, if Owner is performing other work with Owner's employees, proper and safe access to the Site, provide a reasonable opportunity for the introduction and storage of materials and equipment and the execution of such other work, and properly coordinate the Work with theirs. Contractor shall do all cutting, fitting, and patching of the Work that may be required to properly connect or otherwise make its several parts come together and properly integrate with such other work. Contractor shall not endanger any work of others by cutting, excavating, or otherwise altering such work; provided, however, that Contractor may cut or alter others' work with the written consent of Engineer and the others whose work will be affected. The duties and responsibilities of Contractor under this Paragraph are for the benefit of such utility owners and other contractors to the extent that there are comparable provisions for the benefit of Contractor in said direct contracts between Owner and such utility owners and other contractors.

C. If the proper execution or results of any part of Contractor's Work depends upon work performed by others under this Article 7, Contractor shall inspect such other work and promptly report to Engineer in writing any delays, defects, or deficiencies in such other work that render it unavailable or unsuitable for the proper execution and results of Contractor's Work. Contractor's failure to so report will constitute an acceptance of such other work as fit and proper for integration with Contractor's Work except for latent defects and deficiencies in such other work.

7.02 *Coordination*

A. If Owner intends to contract with others for the performance of other work on the Project at the Site, the following will be set forth in Supplementary Conditions:

1. the individual or entity who will have authority and responsibility for coordination of the activities among the various contractors will be identified;

2. the specific matters to be covered by such authority and responsibility will be itemized; and

3. the extent of such authority and responsibilities will be provided.

B. Unless otherwise provided in the Supplementary Conditions, Owner shall have sole authority and responsibility for such coordination.

7.03 *Legal Relationships*

A. Paragraphs 7.01.A and 7.02 are not applicable for utilities not under the control of Owner.

B. Each other direct contract of Owner under Paragraph 7.01.A shall provide that the other contractor is liable to Owner and Contractor for the reasonable direct delay and disruption costs incurred by Contractor as a result of the other contractor's wrongful actions or inactions.

C. Contractor shall be liable to Owner and any other contractor under direct contract to Owner for the reasonable direct delay and disruption costs incurred by such other contractor as a result of Contractor's wrongful action or inactions.

Copyright © 2007 National Society of Professional Engineers for EJCDC. All rights reserved.

ARTICLE 8 – OWNER'S RESPONSIBILITIES

8.01 *Communications to Contractor*

A. Except as otherwise provided in these General Conditions, Owner shall issue all communications to Contractor through Engineer.

8.02 *Replacement of Engineer*

A. In case of termination of the employment of Engineer, Owner shall appoint an engineer to whom Contractor makes no reasonable objection, whose status under the Contract Documents shall be that of the former Engineer.

8.03 *Furnish Data*

A. Owner shall promptly furnish the data required of Owner under the Contract Documents.

8.04 *Pay When Due*

A. Owner shall make payments to Contractor when they are due as provided in Paragraphs 14.02.C and 14.07.C.

8.05 *Lands and Easements; Reports and Tests*

A. Owner's duties with respect to providing lands and easements and providing engineering surveys to establish reference points are set forth in Paragraphs 4.01 and 4.05. Paragraph 4.02 refers to Owner's identifying and making available to Contractor copies of reports of explorations and tests of subsurface conditions and drawings of physical conditions relating to existing surface or subsurface structures at the Site.

8.06 *Insurance*

A. Owner's responsibilities, if any, with respect to purchasing and maintaining liability and property insurance are set forth in Article 5.

8.07 *Change Orders*

A. Owner is obligated to execute Change Orders as indicated in Paragraph 10.03.

8.08 *Inspections, Tests, and Approvals*

A. Owner's responsibility with respect to certain inspections, tests, and approvals is set forth in Paragraph 13.03.B.

8.09 *Limitations on Owner's Responsibilities*

A. The Owner shall not supervise, direct, or have control or authority over, nor be responsible for, Contractor's means, methods, techniques, sequences, or procedures of construction, or the safety precautions and programs incident thereto, or for any failure of Contractor to comply with Laws

Copyright © 2007 National Society of Professional Engineers for EJCDC. All rights reserved.

and Regulations applicable to the performance of the Work. Owner will not be responsible for Contractor's failure to perform the Work in accordance with the Contract Documents.

8.10 *Undisclosed Hazardous Environmental Condition*

A. Owner's responsibility in respect to an undisclosed Hazardous Environmental Condition is set forth in Paragraph 4.06.

8.11 *Evidence of Financial Arrangements*

A. Upon request of Contractor, Owner shall furnish Contractor reasonable evidence that financial arrangements have been made to satisfy Owner's obligations under the Contract Documents.

8.12 *Compliance with Safety Program*

A. While at the Site, Owner's employees and representatives shall comply with the specific applicable requirements of Contractor's safety programs of which Owner has been informed pursuant to Paragraph 6.13.D.

ARTICLE 9 – ENGINEER'S STATUS DURING CONSTRUCTION

9.01 *Owner's Representative*

A. Engineer will be Owner's representative during the construction period. The duties and responsibilities and the limitations of authority of Engineer as Owner's representative during construction are set forth in the Contract Documents.

9.02 *Visits to Site*

A. Engineer will make visits to the Site at intervals appropriate to the various stages of construction as Engineer deems necessary in order to observe as an experienced and qualified design professional the progress that has been made and the quality of the various aspects of Contractor's executed Work. Based on information obtained during such visits and observations, Engineer, for the benefit of Owner, will determine, in general, if the Work is proceeding in accordance with the Contract Documents. Engineer will not be required to make exhaustive or continuous inspections on the Site to check the quality or quantity of the Work. Engineer's efforts will be directed toward providing for Owner a greater degree of confidence that the completed Work will conform generally to the Contract Documents. On the basis of such visits and observations, Engineer will keep Owner informed of the progress of the Work and will endeavor to guard Owner against defective Work.

B. Engineer's visits and observations are subject to all the limitations on Engineer's authority and responsibility set forth in Paragraph 9.09. Particularly, but without limitation, during or as a result of Engineer's visits or observations of Contractor's Work, Engineer will not supervise, direct, control, or have authority over or be responsible for Contractor's means, methods, techniques, sequences, or procedures of construction, or the safety precautions and programs incident thereto, or for any failure of Contractor to comply with Laws and Regulations applicable to the performance of the Work.

Copyright © 2007 National Society of Professional Engineers for EJCDC. All rights reserved.

9.03 *Project Representative*

A. If Owner and Engineer agree, Engineer will furnish a Resident Project Representative to assist Engineer in providing more extensive observation of the Work. The authority and responsibilities of any such Resident Project Representative and assistants will be as provided in the Supplementary Conditions, and limitations on the responsibilities thereof will be as provided in Paragraph 9.09. If Owner designates another representative or agent to represent Owner at the Site who is not Engineer's consultant, agent or employee, the responsibilities and authority and limitations thereon of such other individual or entity will be as provided in the Supplementary Conditions.

9.04 *Authorized Variations in Work*

A. Engineer may authorize minor variations in the Work from the requirements of the Contract Documents which do not involve an adjustment in the Contract Price or the Contract Times and are compatible with the design concept of the completed Project as a functioning whole as indicated by the Contract Documents. These may be accomplished by a Field Order and will be binding on Owner and also on Contractor, who shall perform the Work involved promptly. If Owner or Contractor believes that a Field Order justifies an adjustment in the Contract Price or Contract Times, or both, and the parties are unable to agree on entitlement to or on the amount or extent, if any, of any such adjustment, a Claim may be made therefor as provided in Paragraph 10.05.

9.05 *Rejecting Defective Work*

A. Engineer will have authority to reject Work which Engineer believes to be defective, or that Engineer believes will not produce a completed Project that conforms to the Contract Documents or that will prejudice the integrity of the design concept of the completed Project as a functioning whole as indicated by the Contract Documents. Engineer will also have authority to require special inspection or testing of the Work as provided in Paragraph 13.04, whether or not the Work is fabricated, installed, or completed.

9.06 *Shop Drawings, Change Orders and Payments*

A. In connection with Engineer's authority, and limitations thereof, as to Shop Drawings and Samples, see Paragraph 6.17.

B. In connection with Engineer's authority, and limitations thereof, as to design calculations and design drawings submitted in response to a delegation of professional design services, if any, see Paragraph 6.21.

C. In connection with Engineer's authority as to Change Orders, see Articles 10, 11, and 12.

D. In connection with Engineer's authority as to Applications for Payment, see Article 14.

9.07 *Determinations for Unit Price Work*

A. Engineer will determine the actual quantities and classifications of Unit Price Work performed by Contractor. Engineer will review with Contractor the Engineer's preliminary determinations

Copyright © 2007 National Society of Professional Engineers for EJCDC. All rights reserved.

on such matters before rendering a written decision thereon (by recommendation of an Application for Payment or otherwise). Engineer's written decision thereon will be final and binding (except as modified by Engineer to reflect changed factual conditions or more accurate data) upon Owner and Contractor, subject to the provisions of Paragraph 10.05.

9.08 *Decisions on Requirements of Contract Documents and Acceptability of Work*

A. Engineer will be the initial interpreter of the requirements of the Contract Documents and judge of the acceptability of the Work thereunder. All matters in question and other matters between Owner and Contractor arising prior to the date final payment is due relating to the acceptability of the Work, and the interpretation of the requirements of the Contract Documents pertaining to the performance of the Work, will be referred initially to Engineer in writing within 30 days of the event giving rise to the question.

B. Engineer will, with reasonable promptness, render a written decision on the issue referred. If Owner or Contractor believes that any such decision entitles them to an adjustment in the Contract Price or Contract Times or both, a Claim may be made under Paragraph 10.05. The date of Engineer's decision shall be the date of the event giving rise to the issues referenced for the purposes of Paragraph 10.05.B.

C. Engineer's written decision on the issue referred will be final and binding on Owner and Contractor, subject to the provisions of Paragraph 10.05.

D. When functioning as interpreter and judge under this Paragraph 9.08, Engineer will not show partiality to Owner or Contractor and will not be liable in connection with any interpretation or decision rendered in good faith in such capacity.

9.09 *Limitations on Engineer's Authority and Responsibilities*

A. Neither Engineer's authority or responsibility under this Article 9 or under any other provision of the Contract Documents nor any decision made by Engineer in good faith either to exercise or not exercise such authority or responsibility or the undertaking, exercise, or performance of any authority or responsibility by Engineer shall create, impose, or give rise to any duty in contract, tort, or otherwise owed by Engineer to Contractor, any Subcontractor, any Supplier, any other individual or entity, or to any surety for or employee or agent of any of them.

B. Engineer will not supervise, direct, control, or have authority over or be responsible for Contractor's means, methods, techniques, sequences, or procedures of construction, or the safety precautions and programs incident thereto, or for any failure of Contractor to comply with Laws and Regulations applicable to the performance of the Work. Engineer will not be responsible for Contractor's failure to perform the Work in accordance with the Contract Documents.

C. Engineer will not be responsible for the acts or omissions of Contractor or of any Subcontractor, any Supplier, or of any other individual or entity performing any of the Work.

D. Engineer's review of the final Application for Payment and accompanying documentation and all maintenance and operating instructions, schedules, guarantees, bonds, certificates of inspection, tests and approvals, and other documentation required to be delivered by Paragraph 14.07.A will only be to determine generally that their content complies with the requirements of,

Copyright © 2007 National Society of Professional Engineers for EJCDC. All rights reserved.

and in the case of certificates of inspections, tests, and approvals that the results certified indicate compliance with, the Contract Documents.

E. The limitations upon authority and responsibility set forth in this Paragraph 9.09 shall also apply to the Resident Project Representative, if any, and assistants, if any.

9.10 *Compliance with Safety Program*

A. While at the Site, Engineer's employees and representatives shall comply with the specific applicable requirements of Contractor's safety programs of which Engineer has been informed pursuant to Paragraph 6.13.D.

ARTICLE 10 – CHANGES IN THE WORK; CLAIMS

10.01 *Authorized Changes in the Work*

A. Without invalidating the Contract and without notice to any surety, Owner may, at any time or from time to time, order additions, deletions, or revisions in the Work by a Change Order, or a Work Change Directive. Upon receipt of any such document, Contractor shall promptly proceed with the Work involved which will be performed under the applicable conditions of the Contract Documents (except as otherwise specifically provided).

B. If Owner and Contractor are unable to agree on entitlement to, or on the amount or extent, if any, of an adjustment in the Contract Price or Contract Times, or both, that should be allowed as a result of a Work Change Directive, a Claim may be made therefor as provided in Paragraph 10.05.

10.02 *Unauthorized Changes in the Work*

A. Contractor shall not be entitled to an increase in the Contract Price or an extension of the Contract Times with respect to any work performed that is not required by the Contract Documents as amended, modified, or supplemented as provided in Paragraph 3.04, except in the case of an emergency as provided in Paragraph 6.16 or in the case of uncovering Work as provided in Paragraph 13.04.D.

10.03 *Execution of Change Orders*

A. Owner and Contractor shall execute appropriate Change Orders recommended by Engineer covering:

1. changes in the Work which are: (i) ordered by Owner pursuant to Paragraph 10.01.A, (ii) required because of acceptance of defective Work under Paragraph 13.08.A or Owner's correction of defective Work under Paragraph 13.09, or (iii) agreed to by the parties;

2. changes in the Contract Price or Contract Times which are agreed to by the parties, including any undisputed sum or amount of time for Work actually performed in accordance with a Work Change Directive; and

Copyright © 2007 National Society of Professional Engineers for EJCDC. All rights reserved.

3. changes in the Contract Price or Contract Times which embody the substance of any written decision rendered by Engineer pursuant to Paragraph 10.05; provided that, in lieu of executing any such Change Order, an appeal may be taken from any such decision in accordance with the provisions of the Contract Documents and applicable Laws and Regulations, but during any such appeal, Contractor shall carry on the Work and adhere to the Progress Schedule as provided in Paragraph 6.18.A.

10.04 *Notification to Surety*

A. If the provisions of any bond require notice to be given to a surety of any change affecting the general scope of the Work or the provisions of the Contract Documents (including, but not limited to, Contract Price or Contract Times), the giving of any such notice will be Contractor's responsibility. The amount of each applicable bond will be adjusted to reflect the effect of any such change.

10.05 *Claims*

A. *Engineer's Decision Required*: All Claims, except those waived pursuant to Paragraph 14.09, shall be referred to the Engineer for decision. A decision by Engineer shall be required as a condition precedent to any exercise by Owner or Contractor of any rights or remedies either may otherwise have under the Contract Documents or by Laws and Regulations in respect of such Claims.

B. *Notice:* Written notice stating the general nature of each Claim shall be delivered by the claimant to Engineer and the other party to the Contract promptly (but in no event later than 30 days) after the start of the event giving rise thereto. The responsibility to substantiate a Claim shall rest with the party making the Claim. Notice of the amount or extent of the Claim, with supporting data shall be delivered to the Engineer and the other party to the Contract within 60 days after the start of such event (unless Engineer allows additional time for claimant to submit additional or more accurate data in support of such Claim). A Claim for an adjustment in Contract Price shall be prepared in accordance with the provisions of Paragraph 12.01.B. A Claim for an adjustment in Contract Times shall be prepared in accordance with the provisions of Paragraph 12.02.B. Each Claim shall be accompanied by claimant's written statement that the adjustment claimed is the entire adjustment to which the claimant believes it is entitled as a result of said event. The opposing party shall submit any response to Engineer and the claimant within 30 days after receipt of the claimant's last submittal (unless Engineer allows additional time).

C. *Engineer's Action*: Engineer will review each Claim and, within 30 days after receipt of the last submittal of the claimant or the last submittal of the opposing party, if any, take one of the following actions in writing:

1. deny the Claim in whole or in part;

2. approve the Claim; or

3. notify the parties that the Engineer is unable to resolve the Claim if, in the Engineer's sole discretion, it would be inappropriate for the Engineer to do so. For purposes of further resolution of the Claim, such notice shall be deemed a denial.

Copyright © 2007 National Society of Professional Engineers for EJCDC. All rights reserved.

D. In the event that Engineer does not take action on a Claim within said 30 days, the Claim shall be deemed denied.

E. Engineer's written action under Paragraph 10.05.C or denial pursuant to Paragraphs 10.05.C.3 or 10.05.D will be final and binding upon Owner and Contractor, unless Owner or Contractor invoke the dispute resolution procedure set forth in Article 16 within 30 days of such action or denial.

F. No Claim for an adjustment in Contract Price or Contract Times will be valid if not submitted in accordance with this Paragraph 10.05.

ARTICLE 11 – COST OF THE WORK; ALLOWANCES; UNIT PRICE WORK

11.01 *Cost of the Work*

A. *Costs Included:* The term Cost of the Work means the sum of all costs, except those excluded in Paragraph 11.01.B, necessarily incurred and paid by Contractor in the proper performance of the Work. When the value of any Work covered by a Change Order or when a Claim for an adjustment in Contract Price is determined on the basis of Cost of the Work, the costs to be reimbursed to Contractor will be only those additional or incremental costs required because of the change in the Work or because of the event giving rise to the Claim. Except as otherwise may be agreed to in writing by Owner, such costs shall be in amounts no higher than those prevailing in the locality of the Project, shall not include any of the costs itemized in Paragraph 11.01.B, and shall include only the following items:

1. Payroll costs for employees in the direct employ of Contractor in the performance of the Work under schedules of job classifications agreed upon by Owner and Contractor. Such employees shall include, without limitation, superintendents, foremen, and other personnel employed full time on the Work. Payroll costs for employees not employed full time on the Work shall be apportioned on the basis of their time spent on the Work. Payroll costs shall include, but not be limited to, salaries and wages plus the cost of fringe benefits, which shall include social security contributions, unemployment, excise, and payroll taxes, workers' compensation, health and retirement benefits, bonuses, sick leave, vacation and holiday pay applicable thereto. The expenses of performing Work outside of regular working hours, on Saturday, Sunday, or legal holidays, shall be included in the above to the extent authorized by Owner.

2. Cost of all materials and equipment furnished and incorporated in the Work, including costs of transportation and storage thereof, and Suppliers' field services required in connection therewith. All cash discounts shall accrue to Contractor unless Owner deposits funds with Contractor with which to make payments, in which case the cash discounts shall accrue to Owner. All trade discounts, rebates and refunds and returns from sale of surplus materials and equipment shall accrue to Owner, and Contractor shall make provisions so that they may be obtained.

3. Payments made by Contractor to Subcontractors for Work performed by Subcontractors. If required by Owner, Contractor shall obtain competitive bids from subcontractors acceptable to Owner and Contractor and shall deliver such bids to Owner, who will then determine, with

Copyright © 2007 National Society of Professional Engineers for EJCDC. All rights reserved.

the advice of Engineer, which bids, if any, will be acceptable. If any subcontract provides that the Subcontractor is to be paid on the basis of Cost of the Work plus a fee, the Subcontractor's Cost of the Work and fee shall be determined in the same manner as Contractor's Cost of the Work and fee as provided in this Paragraph 11.01.

4. Costs of special consultants (including but not limited to engineers, architects, testing laboratories, surveyors, attorneys, and accountants) employed for services specifically related to the Work.

5. Supplemental costs including the following:

   a. The proportion of necessary transportation, travel, and subsistence expenses of Contractor's employees incurred in discharge of duties connected with the Work.

   b. Cost, including transportation and maintenance, of all materials, supplies, equipment, machinery, appliances, office, and temporary facilities at the Site, and hand tools not owned by the workers, which are consumed in the performance of the Work, and cost, less market value, of such items used but not consumed which remain the property of Contractor.

   c. Rentals of all construction equipment and machinery, and the parts thereof whether rented from Contractor or others in accordance with rental agreements approved by Owner with the advice of Engineer, and the costs of transportation, loading, unloading, assembly, dismantling, and removal thereof. All such costs shall be in accordance with the terms of said rental agreements. The rental of any such equipment, machinery, or parts shall cease when the use thereof is no longer necessary for the Work.

   d. Sales, consumer, use, and other similar taxes related to the Work, and for which Contractor is liable, as imposed by Laws and Regulations.

   e. Deposits lost for causes other than negligence of Contractor, any Subcontractor, or anyone directly or indirectly employed by any of them or for whose acts any of them may be liable, and royalty payments and fees for permits and licenses.

   f. Losses and damages (and related expenses) caused by damage to the Work, not compensated by insurance or otherwise, sustained by Contractor in connection with the performance of the Work (except losses and damages within the deductible amounts of property insurance established in accordance with Paragraph 5.06.D), provided such losses and damages have resulted from causes other than the negligence of Contractor, any Subcontractor, or anyone directly or indirectly employed by any of them or for whose acts any of them may be liable. Such losses shall include settlements made with the written consent and approval of Owner. No such losses, damages, and expenses shall be included in the Cost of the Work for the purpose of determining Contractor's fee.

   g. The cost of utilities, fuel, and sanitary facilities at the Site.

   h. Minor expenses such as telegrams, long distance telephone calls, telephone service at the Site, express and courier services, and similar petty cash items in connection with the Work.

Copyright © 2007 National Society of Professional Engineers for EJCDC. All rights reserved.

i. The costs of premiums for all bonds and insurance Contractor is required by the Contract Documents to purchase and maintain.

B. *Costs Excluded:* The term Cost of the Work shall not include any of the following items:

1. Payroll costs and other compensation of Contractor's officers, executives, principals (of partnerships and sole proprietorships), general managers, safety managers, engineers, architects, estimators, attorneys, auditors, accountants, purchasing and contracting agents, expediters, timekeepers, clerks, and other personnel employed by Contractor, whether at the Site or in Contractor's principal or branch office for general administration of the Work and not specifically included in the agreed upon schedule of job classifications referred to in Paragraph 11.01.A.1 or specifically covered by Paragraph 11.01.A.4, all of which are to be considered administrative costs covered by the Contractor's fee.

2. Expenses of Contractor's principal and branch offices other than Contractor's office at the Site.

3. Any part of Contractor's capital expenses, including interest on Contractor's capital employed for the Work and charges against Contractor for delinquent payments.

4. Costs due to the negligence of Contractor, any Subcontractor, or anyone directly or indirectly employed by any of them or for whose acts any of them may be liable, including but not limited to, the correction of defective Work, disposal of materials or equipment wrongly supplied, and making good any damage to property.

5. Other overhead or general expense costs of any kind and the costs of any item not specifically and expressly included in Paragraphs 11.01.A.

C. *Contractor's Fee:* When all the Work is performed on the basis of cost-plus, Contractor's fee shall be determined as set forth in the Agreement. When the value of any Work covered by a Change Order or when a Claim for an adjustment in Contract Price is determined on the basis of Cost of the Work, Contractor's fee shall be determined as set forth in Paragraph 12.01.C.

D. *Documentation:* Whenever the Cost of the Work for any purpose is to be determined pursuant to Paragraphs 11.01.A and 11.01.B, Contractor will establish and maintain records thereof in accordance with generally accepted accounting practices and submit in a form acceptable to Engineer an itemized cost breakdown together with supporting data.

11.02 *Allowances*

A. It is understood that Contractor has included in the Contract Price all allowances so named in the Contract Documents and shall cause the Work so covered to be performed for such sums and by such persons or entities as may be acceptable to Owner and Engineer.

B. *Cash Allowances:*

1. Contractor agrees that:

Copyright © 2007 National Society of Professional Engineers for EJCDC. All rights reserved.

a. the cash allowances include the cost to Contractor (less any applicable trade discounts) of materials and equipment required by the allowances to be delivered at the Site, and all applicable taxes; and

b. Contractor's costs for unloading and handling on the Site, labor, installation, overhead, profit, and other expenses contemplated for the cash allowances have been included in the Contract Price and not in the allowances, and no demand for additional payment on account of any of the foregoing will be valid.

C. *Contingency Allowance:*

1. Contractor agrees that a contingency allowance, if any, is for the sole use of Owner to cover unanticipated costs.

D. Prior to final payment, an appropriate Change Order will be issued as recommended by Engineer to reflect actual amounts due Contractor on account of Work covered by allowances, and the Contract Price shall be correspondingly adjusted.

11.03 *Unit Price Work*

A. Where the Contract Documents provide that all or part of the Work is to be Unit Price Work, initially the Contract Price will be deemed to include for all Unit Price Work an amount equal to the sum of the unit price for each separately identified item of Unit Price Work times the estimated quantity of each item as indicated in the Agreement.

B. The estimated quantities of items of Unit Price Work are not guaranteed and are solely for the purpose of comparison of Bids and determining an initial Contract Price. Determinations of the actual quantities and classifications of Unit Price Work performed by Contractor will be made by Engineer subject to the provisions of Paragraph 9.07.

C. Each unit price will be deemed to include an amount considered by Contractor to be adequate to cover Contractor's overhead and profit for each separately identified item.

D. Owner or Contractor may make a Claim for an adjustment in the Contract Price in accordance with Paragraph 10.05 if:

1. the quantity of any item of Unit Price Work performed by Contractor differs materially and significantly from the estimated quantity of such item indicated in the Agreement; and

2. there is no corresponding adjustment with respect to any other item of Work; and

3. Contractor believes that Contractor is entitled to an increase in Contract Price as a result of having incurred additional expense or Owner believes that Owner is entitled to a decrease in Contract Price and the parties are unable to agree as to the amount of any such increase or decrease.

Copyright © 2007 National Society of Professional Engineers for EJCDC. All rights reserved.

ARTICLE 12 – CHANGE OF CONTRACT PRICE; CHANGE OF CONTRACT TIMES

12.01 *Change of Contract Price*

A. The Contract Price may only be changed by a Change Order. Any Claim for an adjustment in the Contract Price shall be based on written notice submitted by the party making the Claim to the Engineer and the other party to the Contract in accordance with the provisions of Paragraph 10.05.

B. The value of any Work covered by a Change Order or of any Claim for an adjustment in the Contract Price will be determined as follows:

1. where the Work involved is covered by unit prices contained in the Contract Documents, by application of such unit prices to the quantities of the items involved (subject to the provisions of Paragraph 11.03); or

2. where the Work involved is not covered by unit prices contained in the Contract Documents, by a mutually agreed lump sum (which may include an allowance for overhead and profit not necessarily in accordance with Paragraph 12.01.C.2); or

3. where the Work involved is not covered by unit prices contained in the Contract Documents and agreement to a lump sum is not reached under Paragraph 12.01.B.2, on the basis of the Cost of the Work (determined as provided in Paragraph 11.01) plus a Contractor's fee for overhead and profit (determined as provided in Paragraph 12.01.C).

C. *Contractor's Fee:* The Contractor's fee for overhead and profit shall be determined as follows:

1. a mutually acceptable fixed fee; or

2. if a fixed fee is not agreed upon, then a fee based on the following percentages of the various portions of the Cost of the Work:

a. for costs incurred under Paragraphs 11.01.A.1 and 11.01.A.2, the Contractor's fee shall be 15 percent;

b. for costs incurred under Paragraph 11.01.A.3, the Contractor's fee shall be five percent;

c. where one or more tiers of subcontracts are on the basis of Cost of the Work plus a fee and no fixed fee is agreed upon, the intent of Paragraphs 12.01.C.2.a and 12.01.C.2.b is that the Subcontractor who actually performs the Work, at whatever tier, will be paid a fee of 15 percent of the costs incurred by such Subcontractor under Paragraphs 11.01.A.1 and 11.01.A.2 and that any higher tier Subcontractor and Contractor will each be paid a fee of five percent of the amount paid to the next lower tier Subcontractor;

d. no fee shall be payable on the basis of costs itemized under Paragraphs 11.01.A.4, 11.01.A.5, and 11.01.B;

e. the amount of credit to be allowed by Contractor to Owner for any change which results in a net decrease in cost will be the amount of the actual net decrease in cost plus a

Copyright © 2007 National Society of Professional Engineers for EJCDC. All rights reserved.

deduction in Contractor's fee by an amount equal to five percent of such net decrease; and

f. when both additions and credits are involved in any one change, the adjustment in Contractor's fee shall be computed on the basis of the net change in accordance with Paragraphs 12.01.C.2.a through 12.01.C.2.e, inclusive.

12.02 *Change of Contract Times*

A. The Contract Times may only be changed by a Change Order. Any Claim for an adjustment in the Contract Times shall be based on written notice submitted by the party making the Claim to the Engineer and the other party to the Contract in accordance with the provisions of Paragraph 10.05.

B. Any adjustment of the Contract Times covered by a Change Order or any Claim for an adjustment in the Contract Times will be determined in accordance with the provisions of this Article 12.

12.03 *Delays*

A. Where Contractor is prevented from completing any part of the Work within the Contract Times due to delay beyond the control of Contractor, the Contract Times will be extended in an amount equal to the time lost due to such delay if a Claim is made therefor as provided in Paragraph 12.02.A. Delays beyond the control of Contractor shall include, but not be limited to, acts or neglect by Owner, acts or neglect of utility owners or other contractors performing other work as contemplated by Article 7, fires, floods, epidemics, abnormal weather conditions, or acts of God.

B. If Owner, Engineer, or other contractors or utility owners performing other work for Owner as contemplated by Article 7, or anyone for whom Owner is responsible, delays, disrupts, or interferes with the performance or progress of the Work, then Contractor shall be entitled to an equitable adjustment in the Contract Price or the Contract Times, or both. Contractor's entitlement to an adjustment of the Contract Times is conditioned on such adjustment being essential to Contractor's ability to complete the Work within the Contract Times.

C. If Contractor is delayed in the performance or progress of the Work by fire, flood, epidemic, abnormal weather conditions, acts of God, acts or failures to act of utility owners not under the control of Owner, or other causes not the fault of and beyond control of Owner and Contractor, then Contractor shall be entitled to an equitable adjustment in Contract Times, if such adjustment is essential to Contractor's ability to complete the Work within the Contract Times. Such an adjustment shall be Contractor's sole and exclusive remedy for the delays described in this Paragraph 12.03.C.

D. Owner, Engineer, and their officers, directors, members, partners, employees, agents, consultants, or subcontractors shall not be liable to Contractor for any claims, costs, losses, or damages (including but not limited to all fees and charges of engineers, architects, attorneys, and other professionals and all court or arbitration or other dispute resolution costs) sustained by Contractor on or in connection with any other project or anticipated project.

Copyright © 2007 National Society of Professional Engineers for EJCDC. All rights reserved.

E. Contractor shall not be entitled to an adjustment in Contract Price or Contract Times for delays within the control of Contractor. Delays attributable to and within the control of a Subcontractor or Supplier shall be deemed to be delays within the control of Contractor.

ARTICLE 13 – TESTS AND INSPECTIONS; CORRECTION, REMOVAL OR ACCEPTANCE OF DEFECTIVE WORK

13.01 *Notice of Defects*

A. Prompt notice of all defective Work of which Owner or Engineer has actual knowledge will be given to Contractor. Defective Work may be rejected, corrected, or accepted as provided in this Article 13.

13.02 *Access to Work*

A. Owner, Engineer, their consultants and other representatives and personnel of Owner, independent testing laboratories, and governmental agencies with jurisdictional interests will have access to the Site and the Work at reasonable times for their observation, inspection, and testing. Contractor shall provide them proper and safe conditions for such access and advise them of Contractor's safety procedures and programs so that they may comply therewith as applicable.

13.03 *Tests and Inspections*

A. Contractor shall give Engineer timely notice of readiness of the Work for all required inspections, tests, or approvals and shall cooperate with inspection and testing personnel to facilitate required inspections or tests.

B. Owner shall employ and pay for the services of an independent testing laboratory to perform all inspections, tests, or approvals required by the Contract Documents except:

1. for inspections, tests, or approvals covered by Paragraphs 13.03.C and 13.03.D below;

2. that costs incurred in connection with tests or inspections conducted pursuant to Paragraph 13.04.B shall be paid as provided in Paragraph 13.04.C; and

3. as otherwise specifically provided in the Contract Documents.

C. If Laws or Regulations of any public body having jurisdiction require any Work (or part thereof) specifically to be inspected, tested, or approved by an employee or other representative of such public body, Contractor shall assume full responsibility for arranging and obtaining such inspections, tests, or approvals, pay all costs in connection therewith, and furnish Engineer the required certificates of inspection or approval.

D. Contractor shall be responsible for arranging and obtaining and shall pay all costs in connection with any inspections, tests, or approvals required for Owner's and Engineer's acceptance of materials or equipment to be incorporated in the Work; or acceptance of materials, mix designs, or equipment submitted for approval prior to Contractor's purchase thereof for incorporation in

Copyright © 2007 National Society of Professional Engineers for EJCDC. All rights reserved.

the Work. Such inspections, tests, or approvals shall be performed by organizations acceptable to Owner and Engineer.

E. If any Work (or the work of others) that is to be inspected, tested, or approved is covered by Contractor without written concurrence of Engineer, Contractor shall, if requested by Engineer, uncover such Work for observation.

F. Uncovering Work as provided in Paragraph 13.03.E shall be at Contractor's expense unless Contractor has given Engineer timely notice of Contractor's intention to cover the same and Engineer has not acted with reasonable promptness in response to such notice.

13.04 *Uncovering Work*

A. If any Work is covered contrary to the written request of Engineer, it must, if requested by Engineer, be uncovered for Engineer's observation and replaced at Contractor's expense.

B. If Engineer considers it necessary or advisable that covered Work be observed by Engineer or inspected or tested by others, Contractor, at Engineer's request, shall uncover, expose, or otherwise make available for observation, inspection, or testing as Engineer may require, that portion of the Work in question, furnishing all necessary labor, material, and equipment.

C. If it is found that the uncovered Work is defective, Contractor shall pay all claims, costs, losses, and damages (including but not limited to all fees and charges of engineers, architects, attorneys, and other professionals and all court or arbitration or other dispute resolution costs) arising out of or relating to such uncovering, exposure, observation, inspection, and testing, and of satisfactory replacement or reconstruction (including but not limited to all costs of repair or replacement of work of others); and Owner shall be entitled to an appropriate decrease in the Contract Price. If the parties are unable to agree as to the amount thereof, Owner may make a Claim therefor as provided in Paragraph 10.05.

D. If the uncovered Work is not found to be defective, Contractor shall be allowed an increase in the Contract Price or an extension of the Contract Times, or both, directly attributable to such uncovering, exposure, observation, inspection, testing, replacement, and reconstruction. If the parties are unable to agree as to the amount or extent thereof, Contractor may make a Claim therefor as provided in Paragraph 10.05.

13.05 *Owner May Stop the Work*

A. If the Work is defective, or Contractor fails to supply sufficient skilled workers or suitable materials or equipment, or fails to perform the Work in such a way that the completed Work will conform to the Contract Documents, Owner may order Contractor to stop the Work, or any portion thereof, until the cause for such order has been eliminated; however, this right of Owner to stop the Work shall not give rise to any duty on the part of Owner to exercise this right for the benefit of Contractor, any Subcontractor, any Supplier, any other individual or entity, or any surety for, or employee or agent of any of them.

Copyright © 2007 National Society of Professional Engineers for EJCDC. All rights reserved.

13.06 *Correction or Removal of Defective Work*

A. Promptly after receipt of written notice, Contractor shall correct all defective Work, whether or not fabricated, installed, or completed, or, if the Work has been rejected by Engineer, remove it from the Project and replace it with Work that is not defective. Contractor shall pay all claims, costs, losses, and damages (including but not limited to all fees and charges of engineers, architects, attorneys, and other professionals and all court or arbitration or other dispute resolution costs) arising out of or relating to such correction or removal (including but not limited to all costs of repair or replacement of work of others).

B. When correcting defective Work under the terms of this Paragraph 13.06 or Paragraph 13.07, Contractor shall take no action that would void or otherwise impair Owner's special warranty and guarantee, if any, on said Work.

13.07 *Correction Period*

A. If within one year after the date of Substantial Completion (or such longer period of time as may be prescribed by the terms of any applicable special guarantee required by the Contract Documents) or by any specific provision of the Contract Documents, any Work is found to be defective, or if the repair of any damages to the land or areas made available for Contractor's use by Owner or permitted by Laws and Regulations as contemplated in Paragraph 6.11.A is found to be defective, Contractor shall promptly, without cost to Owner and in accordance with Owner's written instructions:

1. repair such defective land or areas; or

2. correct such defective Work; or

3. if the defective Work has been rejected by Owner, remove it from the Project and replace it with Work that is not defective, and

4. satisfactorily correct or repair or remove and replace any damage to other Work, to the work of others or other land or areas resulting therefrom.

B. If Contractor does not promptly comply with the terms of Owner's written instructions, or in an emergency where delay would cause serious risk of loss or damage, Owner may have the defective Work corrected or repaired or may have the rejected Work removed and replaced. All claims, costs, losses, and damages (including but not limited to all fees and charges of engineers, architects, attorneys, and other professionals and all court or arbitration or other dispute resolution costs) arising out of or relating to such correction or repair or such removal and replacement (including but not limited to all costs of repair or replacement of work of others) will be paid by Contractor.

C. In special circumstances where a particular item of equipment is placed in continuous service before Substantial Completion of all the Work, the correction period for that item may start to run from an earlier date if so provided in the Specifications.

D. Where defective Work (and damage to other Work resulting therefrom) has been corrected or removed and replaced under this Paragraph 13.07, the correction period hereunder with respect

Copyright © 2007 National Society of Professional Engineers for EJCDC. All rights reserved.

to such Work will be extended for an additional period of one year after such correction or removal and replacement has been satisfactorily completed.

E. Contractor's obligations under this Paragraph 13.07 are in addition to any other obligation or warranty. The provisions of this Paragraph 13.07 shall not be construed as a substitute for, or a waiver of, the provisions of any applicable statute of limitation or repose.

13.08 *Acceptance of Defective Work*

A. If, instead of requiring correction or removal and replacement of defective Work, Owner (and, prior to Engineer's recommendation of final payment, Engineer) prefers to accept it, Owner may do so. Contractor shall pay all claims, costs, losses, and damages (including but not limited to all fees and charges of engineers, architects, attorneys, and other professionals and all court or arbitration or other dispute resolution costs) attributable to Owner's evaluation of and determination to accept such defective Work (such costs to be approved by Engineer as to reasonableness) and for the diminished value of the Work to the extent not otherwise paid by Contractor pursuant to this sentence. If any such acceptance occurs prior to Engineer's recommendation of final payment, a Change Order will be issued incorporating the necessary revisions in the Contract Documents with respect to the Work, and Owner shall be entitled to an appropriate decrease in the Contract Price, reflecting the diminished value of Work so accepted. If the parties are unable to agree as to the amount thereof, Owner may make a Claim therefor as provided in Paragraph 10.05. If the acceptance occurs after such recommendation, an appropriate amount will be paid by Contractor to Owner.

13.09 *Owner May Correct Defective Work*

A. If Contractor fails within a reasonable time after written notice from Engineer to correct defective Work, or to remove and replace rejected Work as required by Engineer in accordance with Paragraph 13.06.A, or if Contractor fails to perform the Work in accordance with the Contract Documents, or if Contractor fails to comply with any other provision of the Contract Documents, Owner may, after seven days written notice to Contractor, correct, or remedy any such deficiency.

B. In exercising the rights and remedies under this Paragraph 13.09, Owner shall proceed expeditiously. In connection with such corrective or remedial action, Owner may exclude Contractor from all or part of the Site, take possession of all or part of the Work and suspend Contractor's services related thereto, take possession of Contractor's tools, appliances, construction equipment and machinery at the Site, and incorporate in the Work all materials and equipment stored at the Site or for which Owner has paid Contractor but which are stored elsewhere. Contractor shall allow Owner, Owner's representatives, agents and employees, Owner's other contractors, and Engineer and Engineer's consultants access to the Site to enable Owner to exercise the rights and remedies under this Paragraph.

C. All claims, costs, losses, and damages (including but not limited to all fees and charges of engineers, architects, attorneys, and other professionals and all court or arbitration or other dispute resolution costs) incurred or sustained by Owner in exercising the rights and remedies under this Paragraph 13.09 will be charged against Contractor, and a Change Order will be issued incorporating the necessary revisions in the Contract Documents with respect to the

Copyright © 2007 National Society of Professional Engineers for EJCDC. All rights reserved.

Work; and Owner shall be entitled to an appropriate decrease in the Contract Price. If the parties are unable to agree as to the amount of the adjustment, Owner may make a Claim therefor as provided in Paragraph 10.05. Such claims, costs, losses and damages will include but not be limited to all costs of repair, or replacement of work of others destroyed or damaged by correction, removal, or replacement of Contractor's defective Work.

D. Contractor shall not be allowed an extension of the Contract Times because of any delay in the performance of the Work attributable to the exercise by Owner of Owner's rights and remedies under this Paragraph 13.09.

ARTICLE 14 – PAYMENTS TO CONTRACTOR AND COMPLETION

14.01 *Schedule of Values*

A. The Schedule of Values established as provided in Paragraph 2.07.A will serve as the basis for progress payments and will be incorporated into a form of Application for Payment acceptable to Engineer. Progress payments on account of Unit Price Work will be based on the number of units completed.

14.02 *Progress Payments*

A. *Applications for Payments:*

1. At least 20 days before the date established in the Agreement for each progress payment (but not more often than once a month), Contractor shall submit to Engineer for review an Application for Payment filled out and signed by Contractor covering the Work completed as of the date of the Application and accompanied by such supporting documentation as is required by the Contract Documents. If payment is requested on the basis of materials and equipment not incorporated in the Work but delivered and suitably stored at the Site or at another location agreed to in writing, the Application for Payment shall also be accompanied by a bill of sale, invoice, or other documentation warranting that Owner has received the materials and equipment free and clear of all Liens and evidence that the materials and equipment are covered by appropriate property insurance or other arrangements to protect Owner's interest therein, all of which must be satisfactory to Owner.

2. Beginning with the second Application for Payment, each Application shall include an affidavit of Contractor stating that all previous progress payments received on account of the Work have been applied on account to discharge Contractor's legitimate obligations associated with prior Applications for Payment.

3. The amount of retainage with respect to progress payments will be as stipulated in the Agreement.

B. *Review of Applications:*

1. Engineer will, within 10 days after receipt of each Application for Payment, either indicate in writing a recommendation of payment and present the Application to Owner or return the Application to Contractor indicating in writing Engineer's reasons for refusing to

Copyright © 2007 National Society of Professional Engineers for EJCDC. All rights reserved.

recommend payment. In the latter case, Contractor may make the necessary corrections and resubmit the Application.

2. Engineer's recommendation of any payment requested in an Application for Payment will constitute a representation by Engineer to Owner, based on Engineer's observations of the executed Work as an experienced and qualified design professional, and on Engineer's review of the Application for Payment and the accompanying data and schedules, that to the best of Engineer's knowledge, information and belief:

   a. the Work has progressed to the point indicated;

   b. the quality of the Work is generally in accordance with the Contract Documents (subject to an evaluation of the Work as a functioning whole prior to or upon Substantial Completion, the results of any subsequent tests called for in the Contract Documents, a final determination of quantities and classifications for Unit Price Work under Paragraph 9.07, and any other qualifications stated in the recommendation); and

   c. the conditions precedent to Contractor's being entitled to such payment appear to have been fulfilled in so far as it is Engineer's responsibility to observe the Work.

3. By recommending any such payment Engineer will not thereby be deemed to have represented that:

   a. inspections made to check the quality or the quantity of the Work as it has been performed have been exhaustive, extended to every aspect of the Work in progress, or involved detailed inspections of the Work beyond the responsibilities specifically assigned to Engineer in the Contract Documents; or

   b. there may not be other matters or issues between the parties that might entitle Contractor to be paid additionally by Owner or entitle Owner to withhold payment to Contractor.

4. Neither Engineer's review of Contractor's Work for the purposes of recommending payments nor Engineer's recommendation of any payment, including final payment, will impose responsibility on Engineer:

   a. to supervise, direct, or control the Work, or

   b. for the means, methods, techniques, sequences, or procedures of construction, or the safety precautions and programs incident thereto, or

   c. for Contractor's failure to comply with Laws and Regulations applicable to Contractor's performance of the Work, or

   d. to make any examination to ascertain how or for what purposes Contractor has used the moneys paid on account of the Contract Price, or

   e. to determine that title to any of the Work, materials, or equipment has passed to Owner free and clear of any Liens.

Copyright © 2007 National Society of Professional Engineers for EJCDC. All rights reserved.

5. Engineer may refuse to recommend the whole or any part of any payment if, in Engineer's opinion, it would be incorrect to make the representations to Owner stated in Paragraph 14.02.B.2. Engineer may also refuse to recommend any such payment or, because of subsequently discovered evidence or the results of subsequent inspections or tests, revise or revoke any such payment recommendation previously made, to such extent as may be necessary in Engineer's opinion to protect Owner from loss because:

    a. the Work is defective, or completed Work has been damaged, requiring correction or replacement;

    b. the Contract Price has been reduced by Change Orders;

    c. Owner has been required to correct defective Work or complete Work in accordance with Paragraph 13.09; or

    d. Engineer has actual knowledge of the occurrence of any of the events enumerated in Paragraph 15.02.A.

C. *Payment Becomes Due:*

1. Ten days after presentation of the Application for Payment to Owner with Engineer's recommendation, the amount recommended will (subject to the provisions of Paragraph 14.02.D) become due, and when due will be paid by Owner to Contractor.

D. *Reduction in Payment:*

1. Owner may refuse to make payment of the full amount recommended by Engineer because:

    a. claims have been made against Owner on account of Contractor's performance or furnishing of the Work;

    b. Liens have been filed in connection with the Work, except where Contractor has delivered a specific bond satisfactory to Owner to secure the satisfaction and discharge of such Liens;

    c. there are other items entitling Owner to a set-off against the amount recommended; or

    d. Owner has actual knowledge of the occurrence of any of the events enumerated in Paragraphs 14.02.B.5.a through 14.02.B.5.c or Paragraph 15.02.A.

2. If Owner refuses to make payment of the full amount recommended by Engineer, Owner will give Contractor immediate written notice (with a copy to Engineer) stating the reasons for such action and promptly pay Contractor any amount remaining after deduction of the amount so withheld. Owner shall promptly pay Contractor the amount so withheld, or any adjustment thereto agreed to by Owner and Contractor, when Contractor remedies the reasons for such action.

Copyright © 2007 National Society of Professional Engineers for EJCDC. All rights reserved.

3. Upon a subsequent determination that Owner's refusal of payment was not justified, the amount wrongfully withheld shall be treated as an amount due as determined by Paragraph 14.02.C.1 and subject to interest as provided in the Agreement.

14.03 *Contractor's Warranty of Title*

A. Contractor warrants and guarantees that title to all Work, materials, and equipment covered by any Application for Payment, whether incorporated in the Project or not, will pass to Owner no later than the time of payment free and clear of all Liens.

14.04 *Substantial Completion*

A. When Contractor considers the entire Work ready for its intended use Contractor shall notify Owner and Engineer in writing that the entire Work is substantially complete (except for items specifically listed by Contractor as incomplete) and request that Engineer issue a certificate of Substantial Completion.

B. Promptly after Contractor's notification, Owner, Contractor, and Engineer shall make an inspection of the Work to determine the status of completion. If Engineer does not consider the Work substantially complete, Engineer will notify Contractor in writing giving the reasons therefor.

C. If Engineer considers the Work substantially complete, Engineer will deliver to Owner a tentative certificate of Substantial Completion which shall fix the date of Substantial Completion. There shall be attached to the certificate a tentative list of items to be completed or corrected before final payment. Owner shall have seven days after receipt of the tentative certificate during which to make written objection to Engineer as to any provisions of the certificate or attached list. If, after considering such objections, Engineer concludes that the Work is not substantially complete, Engineer will, within 14 days after submission of the tentative certificate to Owner, notify Contractor in writing, stating the reasons therefor. If, after consideration of Owner's objections, Engineer considers the Work substantially complete, Engineer will, within said 14 days, execute and deliver to Owner and Contractor a definitive certificate of Substantial Completion (with a revised tentative list of items to be completed or corrected) reflecting such changes from the tentative certificate as Engineer believes justified after consideration of any objections from Owner.

D. At the time of delivery of the tentative certificate of Substantial Completion, Engineer will deliver to Owner and Contractor a written recommendation as to division of responsibilities pending final payment between Owner and Contractor with respect to security, operation, safety, and protection of the Work, maintenance, heat, utilities, insurance, and warranties and guarantees. Unless Owner and Contractor agree otherwise in writing and so inform Engineer in writing prior to Engineer's issuing the definitive certificate of Substantial Completion, Engineer's aforesaid recommendation will be binding on Owner and Contractor until final payment.

E. Owner shall have the right to exclude Contractor from the Site after the date of Substantial Completion subject to allowing Contractor reasonable access to remove its property and complete or correct items on the tentative list.

Copyright © 2007 National Society of Professional Engineers for EJCDC. All rights reserved.

14.05 *Partial Utilization*

A. Prior to Substantial Completion of all the Work, Owner may use or occupy any substantially completed part of the Work which has specifically been identified in the Contract Documents, or which Owner, Engineer, and Contractor agree constitutes a separately functioning and usable part of the Work that can be used by Owner for its intended purpose without significant interference with Contractor's performance of the remainder of the Work, subject to the following conditions:

1. Owner at any time may request Contractor in writing to permit Owner to use or occupy any such part of the Work which Owner believes to be ready for its intended use and substantially complete. If and when Contractor agrees that such part of the Work is substantially complete, Contractor, Owner, and Engineer will follow the procedures of Paragraph 14.04.A through D for that part of the Work.

2. Contractor at any time may notify Owner and Engineer in writing that Contractor considers any such part of the Work ready for its intended use and substantially complete and request Engineer to issue a certificate of Substantial Completion for that part of the Work.

3. Within a reasonable time after either such request, Owner, Contractor, and Engineer shall make an inspection of that part of the Work to determine its status of completion. If Engineer does not consider that part of the Work to be substantially complete, Engineer will notify Owner and Contractor in writing giving the reasons therefor. If Engineer considers that part of the Work to be substantially complete, the provisions of Paragraph 14.04 will apply with respect to certification of Substantial Completion of that part of the Work and the division of responsibility in respect thereof and access thereto.

4. No use or occupancy or separate operation of part of the Work may occur prior to compliance with the requirements of Paragraph 5.10 regarding property insurance.

14.06 *Final Inspection*

A. Upon written notice from Contractor that the entire Work or an agreed portion thereof is complete, Engineer will promptly make a final inspection with Owner and Contractor and will notify Contractor in writing of all particulars in which this inspection reveals that the Work is incomplete or defective. Contractor shall immediately take such measures as are necessary to complete such Work or remedy such deficiencies.

14.07 *Final Payment*

A. *Application for Payment:*

1. After Contractor has, in the opinion of Engineer, satisfactorily completed all corrections identified during the final inspection and has delivered, in accordance with the Contract Documents, all maintenance and operating instructions, schedules, guarantees, bonds, certificates or other evidence of insurance, certificates of inspection, marked-up record documents (as provided in Paragraph 6.12), and other documents, Contractor may make application for final payment following the procedure for progress payments.

Copyright © 2007 National Society of Professional Engineers for EJCDC. All rights reserved.

2. The final Application for Payment shall be accompanied (except as previously delivered) by:

   a. all documentation called for in the Contract Documents, including but not limited to the evidence of insurance required by Paragraph 5.04.B.6;

   b. consent of the surety, if any, to final payment;

   c. a list of all Claims against Owner that Contractor believes are unsettled; and

   d. complete and legally effective releases or waivers (satisfactory to Owner) of all Lien rights arising out of or Liens filed in connection with the Work.

3. In lieu of the releases or waivers of Liens specified in Paragraph 14.07.A.2 and as approved by Owner, Contractor may furnish receipts or releases in full and an affidavit of Contractor that: (i) the releases and receipts include all labor, services, material, and equipment for which a Lien could be filed; and (ii) all payrolls, material and equipment bills, and other indebtedness connected with the Work for which Owner might in any way be responsible, or which might in any way result in liens or other burdens on Owner's property, have been paid or otherwise satisfied. If any Subcontractor or Supplier fails to furnish such a release or receipt in full, Contractor may furnish a bond or other collateral satisfactory to Owner to indemnify Owner against any Lien.

B. *Engineer's Review of Application and Acceptance:*

1. If, on the basis of Engineer's observation of the Work during construction and final inspection, and Engineer's review of the final Application for Payment and accompanying documentation as required by the Contract Documents, Engineer is satisfied that the Work has been completed and Contractor's other obligations under the Contract Documents have been fulfilled, Engineer will, within ten days after receipt of the final Application for Payment, indicate in writing Engineer's recommendation of payment and present the Application for Payment to Owner for payment. At the same time Engineer will also give written notice to Owner and Contractor that the Work is acceptable subject to the provisions of Paragraph 14.09. Otherwise, Engineer will return the Application for Payment to Contractor, indicating in writing the reasons for refusing to recommend final payment, in which case Contractor shall make the necessary corrections and resubmit the Application for Payment.

C. *Payment Becomes Due:*

1. Thirty days after the presentation to Owner of the Application for Payment and accompanying documentation, the amount recommended by Engineer, less any sum Owner is entitled to set off against Engineer's recommendation, including but not limited to liquidated damages, will become due and will be paid by Owner to Contractor.

14.08 *Final Completion Delayed*

A. If, through no fault of Contractor, final completion of the Work is significantly delayed, and if Engineer so confirms, Owner shall, upon receipt of Contractor's final Application for Payment (for Work fully completed and accepted) and recommendation of Engineer, and without

Copyright © 2007 National Society of Professional Engineers for EJCDC. All rights reserved.

terminating the Contract, make payment of the balance due for that portion of the Work fully completed and accepted. If the remaining balance to be held by Owner for Work not fully completed or corrected is less than the retainage stipulated in the Agreement, and if bonds have been furnished as required in Paragraph 5.01, the written consent of the surety to the payment of the balance due for that portion of the Work fully completed and accepted shall be submitted by Contractor to Engineer with the Application for such payment. Such payment shall be made under the terms and conditions governing final payment, except that it shall not constitute a waiver of Claims.

14.09 *Waiver of Claims*

A. The making and acceptance of final payment will constitute:

1. a waiver of all Claims by Owner against Contractor, except Claims arising from unsettled Liens, from defective Work appearing after final inspection pursuant to Paragraph 14.06, from failure to comply with the Contract Documents or the terms of any special guarantees specified therein, or from Contractor's continuing obligations under the Contract Documents; and

2. a waiver of all Claims by Contractor against Owner other than those previously made in accordance with the requirements herein and expressly acknowledged by Owner in writing as still unsettled.

ARTICLE 15 – SUSPENSION OF WORK AND TERMINATION

15.01 *Owner May Suspend Work*

A. At any time and without cause, Owner may suspend the Work or any portion thereof for a period of not more than 90 consecutive days by notice in writing to Contractor and Engineer which will fix the date on which Work will be resumed. Contractor shall resume the Work on the date so fixed. Contractor shall be granted an adjustment in the Contract Price or an extension of the Contract Times, or both, directly attributable to any such suspension if Contractor makes a Claim therefor as provided in Paragraph 10.05.

15.02 *Owner May Terminate for Cause*

A. The occurrence of any one or more of the following events will justify termination for cause:

1. Contractor's persistent failure to perform the Work in accordance with the Contract Documents (including, but not limited to, failure to supply sufficient skilled workers or suitable materials or equipment or failure to adhere to the Progress Schedule established under Paragraph 2.07 as adjusted from time to time pursuant to Paragraph 6.04);

2. Contractor's disregard of Laws or Regulations of any public body having jurisdiction;

3. Contractor's repeated disregard of the authority of Engineer; or

4. Contractor's violation in any substantial way of any provisions of the Contract Documents.

Copyright © 2007 National Society of Professional Engineers for EJCDC. All rights reserved.

B. If one or more of the events identified in Paragraph 15.02.A occur, Owner may, after giving Contractor (and surety) seven days written notice of its intent to terminate the services of Contractor:

1. exclude Contractor from the Site, and take possession of the Work and of all Contractor's tools, appliances, construction equipment, and machinery at the Site, and use the same to the full extent they could be used by Contractor (without liability to Contractor for trespass or conversion);

2. incorporate in the Work all materials and equipment stored at the Site or for which Owner has paid Contractor but which are stored elsewhere; and

3. complete the Work as Owner may deem expedient.

C. If Owner proceeds as provided in Paragraph 15.02.B, Contractor shall not be entitled to receive any further payment until the Work is completed. If the unpaid balance of the Contract Price exceeds all claims, costs, losses, and damages (including but not limited to all fees and charges of engineers, architects, attorneys, and other professionals and all court or arbitration or other dispute resolution costs) sustained by Owner arising out of or relating to completing the Work, such excess will be paid to Contractor. If such claims, costs, losses, and damages exceed such unpaid balance, Contractor shall pay the difference to Owner. Such claims, costs, losses, and damages incurred by Owner will be reviewed by Engineer as to their reasonableness and, when so approved by Engineer, incorporated in a Change Order. When exercising any rights or remedies under this Paragraph, Owner shall not be required to obtain the lowest price for the Work performed.

D. Notwithstanding Paragraphs 15.02.B and 15.02.C, Contractor's services will not be terminated if Contractor begins within seven days of receipt of notice of intent to terminate to correct its failure to perform and proceeds diligently to cure such failure within no more than 30 days of receipt of said notice.

E. Where Contractor's services have been so terminated by Owner, the termination will not affect any rights or remedies of Owner against Contractor then existing or which may thereafter accrue. Any retention or payment of moneys due Contractor by Owner will not release Contractor from liability.

F. If and to the extent that Contractor has provided a performance bond under the provisions of Paragraph 5.01.A, the termination procedures of that bond shall supersede the provisions of Paragraphs 15.02.B and 15.02.C.

15.03 *Owner May Terminate For Convenience*

A. Upon seven days written notice to Contractor and Engineer, Owner may, without cause and without prejudice to any other right or remedy of Owner, terminate the Contract. In such case, Contractor shall be paid for (without duplication of any items):

1. completed and acceptable Work executed in accordance with the Contract Documents prior to the effective date of termination, including fair and reasonable sums for overhead and profit on such Work;

Copyright © 2007 National Society of Professional Engineers for EJCDC. All rights reserved.

2. expenses sustained prior to the effective date of termination in performing services and furnishing labor, materials, or equipment as required by the Contract Documents in connection with uncompleted Work, plus fair and reasonable sums for overhead and profit on such expenses;

3. all claims, costs, losses, and damages (including but not limited to all fees and charges of engineers, architects, attorneys, and other professionals and all court or arbitration or other dispute resolution costs) incurred in settlement of terminated contracts with Subcontractors, Suppliers, and others; and

4. reasonable expenses directly attributable to termination.

B. Contractor shall not be paid on account of loss of anticipated profits or revenue or other economic loss arising out of or resulting from such termination.

15.04 *Contractor May Stop Work or Terminate*

A. If, through no act or fault of Contractor, (i) the Work is suspended for more than 90 consecutive days by Owner or under an order of court or other public authority, or (ii) Engineer fails to act on any Application for Payment within 30 days after it is submitted, or (iii) Owner fails for 30 days to pay Contractor any sum finally determined to be due, then Contractor may, upon seven days written notice to Owner and Engineer, and provided Owner or Engineer do not remedy such suspension or failure within that time, terminate the Contract and recover from Owner payment on the same terms as provided in Paragraph 15.03.

B. In lieu of terminating the Contract and without prejudice to any other right or remedy, if Engineer has failed to act on an Application for Payment within 30 days after it is submitted, or Owner has failed for 30 days to pay Contractor any sum finally determined to be due, Contractor may, seven days after written notice to Owner and Engineer, stop the Work until payment is made of all such amounts due Contractor, including interest thereon. The provisions of this Paragraph 15.04 are not intended to preclude Contractor from making a Claim under Paragraph 10.05 for an adjustment in Contract Price or Contract Times or otherwise for expenses or damage directly attributable to Contractor's stopping the Work as permitted by this Paragraph.

ARTICLE 16 – DISPUTE RESOLUTION

16.01 *Methods and Procedures*

A. Either Owner or Contractor may request mediation of any Claim submitted to Engineer for a decision under Paragraph 10.05 before such decision becomes final and binding. The mediation will be governed by the Construction Industry Mediation Rules of the American Arbitration Association in effect as of the Effective Date of the Agreement. The request for mediation shall be submitted in writing to the American Arbitration Association and the other party to the Contract. Timely submission of the request shall stay the effect of Paragraph 10.05.E.

B. Owner and Contractor shall participate in the mediation process in good faith. The process shall be concluded within 60 days of filing of the request. The date of termination of the mediation shall be determined by application of the mediation rules referenced above.

Copyright © 2007 National Society of Professional Engineers for EJCDC. All rights reserved.

C. If the Claim is not resolved by mediation, Engineer's action under Paragraph 10.05.C or a denial pursuant to Paragraphs 10.05.C.3 or 10.05.D shall become final and binding 30 days after termination of the mediation unless, within that time period, Owner or Contractor:

1. elects in writing to invoke any dispute resolution process provided for in the Supplementary Conditions; or

2. agrees with the other party to submit the Claim to another dispute resolution process; or

3. gives written notice to the other party of the intent to submit the Claim to a court of competent jurisdiction.

ARTICLE 17 – MISCELLANEOUS

17.01 *Giving Notice*

A. Whenever any provision of the Contract Documents requires the giving of written notice, it will be deemed to have been validly given if:

1. delivered in person to the individual or to a member of the firm or to an officer of the corporation for whom it is intended; or

2. delivered at or sent by registered or certified mail, postage prepaid, to the last business address known to the giver of the notice.

17.02 *Computation of Times*

A. When any period of time is referred to in the Contract Documents by days, it will be computed to exclude the first and include the last day of such period. If the last day of any such period falls on a Saturday or Sunday or on a day made a legal holiday by the law of the applicable jurisdiction, such day will be omitted from the computation.

17.03 *Cumulative Remedies*

A. The duties and obligations imposed by these General Conditions and the rights and remedies available hereunder to the parties hereto are in addition to, and are not to be construed in any way as a limitation of, any rights and remedies available to any or all of them which are otherwise imposed or available by Laws or Regulations, by special warranty or guarantee, or by other provisions of the Contract Documents. The provisions of this Paragraph will be as effective as if repeated specifically in the Contract Documents in connection with each particular duty, obligation, right, and remedy to which they apply.

17.04 *Survival of Obligations*

A. All representations, indemnifications, warranties, and guarantees made in, required by, or given in accordance with the Contract Documents, as well as all continuing obligations indicated in the Contract Documents, will survive final payment, completion, and acceptance of the Work or termination or completion of the Contract or termination of the services of Contractor.

Copyright © 2007 National Society of Professional Engineers for EJCDC. All rights reserved.

17.05 *Controlling Law*

A. This Contract is to be governed by the law of the state in which the Project is located.

17.06 *Headings*

A. Article and paragraph headings are inserted for convenience only and do not constitute parts of these General Conditions.

Copyright © 2007 National Society of Professional Engineers for EJCDC. All rights reserved.

SECTION 00 73 00

SUPPLEMENTARY CONDITIONS OF THE
CONSTRUCTION CONTRACT

TABLE OF CONTENTS

Page

SC-2.01	Delivery of Bonds and Insurance	1
SC-2.03	Commencement of Contract Times; Notice to Proceed	1
SC-2.04	Starting Work	1
SC-2.05	Before Starting Construction	2
SC-4.02	Subsurface and Physical Conditions	2
SC-4.06	Hazardous Environmental Conditions	2
SC-5.02	Licensed Surities and Insurers	2
SC-5.03	Certificates of Insurance	3
SC-5.04	Contractor's Liability Insurance	3
SC-6.02	Labor; Working Hours	4
SC-6.06	Concerning Subcontractors, Suppliers, and Others	5
SC-6.08	Permits	5
SC-7.02	Coordination	5
SC-7.04	Claims Between Contractors	6
SC-9.03	Project Representative	7
SC-11.02	Allowances	9
SC-11.03	Unit Price Work	10
SC-12.03	Delays	10
SC-13.04	Uncovering Work	10
SC-14.02	Progress Payments	11
SC-14.07	Final Payment	11

Copyright © 2007 National Society of Professional Engineers for EJCDC. All rights reserved.

SUPPLEMENTARY CONDITIONS OF THE CONSTRUCTION CONTRACT

These Supplementary Conditions amend or supplement the Standard General Conditions of the Construction Contract, EJCDC C-700 (2007 Edition). All provisions which are not so amended or supplemented remain in full force and effect.

The terms used in these Supplementary Conditions have the meanings stated in the General Conditions. Additional terms used in these Supplementary Conditions have the meanings stated below, which are applicable to both the singular and plural thereof.

The address system used in these Supplementary Conditions is the same as the address system used in the General Conditions, with the prefix "SC" added thereto.

SC-2.01 *Delivery of Bonds and Evidence of Insurance*

SC-2.01 Delete Paragraph 2.01B in its entirety and insert the following:

B. *Evidence of Insurance:* Before any Work at the Site is started, Contractor shall deliver to the Owner, with copies to each additional insured identified in the Supplementary Condition SC-5.04, certificates of insurance (and other evidence of insurance which Owner or any additional insured may reasonably request) which Contractor is required to purchase and maintain in accordance with Article 5 of the General Conditions.

SC-2.03 *Commencement of Contract Times; Notice to Proceed*

SC-2.03 Delete paragraph 2.03A in its entirety and insert the following:

A. The Contract Times will commence to run on the day the Contract is approved by the South Haven City Council, which shall be the Effective Date of the Agreement.

SC-2.04 *Starting the Work*

SC-2.04 Delete paragraph 2.04A in its entirety and insert the following:

A. No Work shall be performed prior to the date on which the Contract Times commence to run.

B. No Work shall be performed prior to Owners written acceptance of Contractors required bonds and evidence of

Copyright © 2007 National Society of Professional Engineers for EJCDC. All rights reserved.

insurance, which Owner will submit to Contractor in the form of a Notice to Proceed.

C. No Work requiring permits shall be performed prior to Contractors possession of such permits.

SC-2.05 *Before Starting Construction*

2.05A Delete paragraph 2.05.A.3 in its entirety.

SC-4.02 *Subsurface and Physical Conditions*

SC-4.02 Add the following new paragraphs immediately after Paragraph 4.02.B:

C. The following drawings of physical conditions relating to existing surface or subsurface structures at the Site (except Underground Facilities) are known to Owner:

1. City of South Haven archives contain various drawings providing information about site conditions. Relevant information has been provided on plans to the extent known by Engineer.

D. The reports and drawings identified above are not part of the Contract Documents, but the "technical data" contained therein upon which Contractor may rely, as expressly identified and established above, are incorporated in the Contract Documents by reference. Contractor is not entitled to rely upon any other information and data known to or identified by Owner or Engineer.

E. Copies of reports and drawings identified in SC-4.02.C that are not included with the Bidding Documents may be examined at South Haven Public Works, 1199 8th Avenue, South Haven MI, 49090 during regular business hours.

SC-4.06 *Hazardous Environmental Conditions*

SC-4.06 Delete Paragraphs 4.06.A and 4.06.B in their entirety and insert the following:

A. No reports or drawings related to Hazardous Environmental Conditions at the Site are known to Owner.

B. Not Used.

SC-5.02 *Licensed Sureties and Insurers*

Copyright © 2007 National Society of Professional Engineers for EJCDC. All rights reserved.

SC-5.02 Add the following new paragraph immediately after Paragraph 5.02A

B. All required insurance shall be obtained from insurance carriers having current AMBest Rating of A(-) VII or higher.

SC-5.03 *Certificates of Insurance*

SC-5.03B Delete paragraph 5.03B in its entirety.

SC-5.03F Add the following new paragraph immediately after Paragraph 5.03E

F. Contractor shall deliver renewal certificates to Owner not less than 10 days prior to the expiration date of any required policy which is set to expire during the life of the contract.

SC-5.04 *Contractor's Liability Insurance*

SC-5.04C Add the following new paragraph immediately after Paragraph 5.04.B:

C. The limits of liability for the insurance required by Paragraph 5.04 of the General Conditions shall provide coverage for not less than the following amounts or greater where required by Laws and Regulations:

1. **Workers' Compensation Insurance:** The Contractor shall procure and maintain during the life of this contract, Workers' Compensation Insurance, including Employers' Liability Coverage, in accordance with all applicable statutes of the State of Michigan.

2. **Commercial General Liability Insurance:** The Contractor shall procure and maintain during the life of this contract, Commercial General Liability Insurance on an 'Occurrence Basis" with limits of liability not less than $3,000,000.00 per occurrence and aggregate. Coverage shall include the following extensions: (A) Contractual Liability; (B) Products and Completed Operations; (C) Independent Contractors Coverage; (D) Broad Form General Liability Extensions or equivalent; if not already included; (E) Deletion of all Explosion, Collapse, and Underground (XCU) Exclusions, if applicable.

3. **Motor Vehicle Liability**: The Contractor shall procure and maintain during the life of this contract Motor Vehicle Liability Insurance, including Michigan No-Fault Coverage, with limits of liability not less than $3,000,000.00 per occurrence combined single limit for Bodily Injury, and Property Damage. Coverage shall include all owned vehicles, all non-owned vehicles, and all hired vehicles.

Copyright © 2007 National Society of Professional Engineers for EJCDC. All rights reserved.

4. **Additional Insured:** Commercial General Liability and Motor Vehicle Liability, as described above, shall include an endorsement naming the City of South Haven as *Additional Insured*. It is understood and agreed by naming the City of South Haven as additional insured, coverage afforded is considered to be primary and any other insurance the City of South Haven may have in effect shall be considered secondary and/or excess.

5. **Cancellation Notice:** Workers' Compensation Insurance, Commercial General Liability Insurance, and Motor Vehicle Liability Insurance, as described above, shall include an endorsement stating the following: "It is understood and agreed that Thirty (30) days, Ten (10) day for non-payment of premium, Advance Written Notice of Cancellation, Non-Renewal, Reduction, and/or Material Change shall be sent to: (Mr. Roger C. Huff, City of South Haven, 1199 8th Avenue, South Haven, MI, 49090).

6. **Owner's and Contractors' Protective Liability:** The Contractor shall procure and maintain during the life of this contract, a separate Owners' and Contractors' Protective Liability Policy with limits of liability not less than $3,000,000.00 per occurrence and aggregate. The City of South Haven shall be "Named Insured" on said coverage. Thirty (30) days Notice of Cancellation shall be endorsed onto this policy.

7. **Proof of Insurance Coverage:** The Contractor shall provide the City of South Haven, prior to execution of contract, certificates and policies as listed below:

   a. Two (2) copies of Certificate of Insurance for Workers' Compensation Insurance;

   b. Two (2) copies of Certificate of Insurance for Commercial General Liability Insurance;

   c. Two (2) copies of Certificate of Insurance for Vehicle Liability Insurance;

   d. Original Policy, or original Binder pending issuance of policy, for Owners' & Contractor' Protective Liability Insurance.

   e. If so requested, Certified Copies of all policies mentioned above will be furnished.

SC-5.04D Add the following new paragraph immediately after Paragraph 5.04.C:

D. All deductibles and SIRs shall be the responsibility of Contractor.

SC-6.02 *Labor; Working Hours*

Copyright © 2007 National Society of Professional Engineers for EJCDC. All rights reserved.

SC-6.02.B. Delete Paragraph 6.02B in its entirety and replace with the following:

B. Except as otherwise required for the safety or protection of persons or the Work or property at the Site or adjacent thereto, and except as otherwise stated in the Contract Documents, all Work at the Site shall be performed during the hours of 7:00am to 6:00 pm Monday through Saturday. Contractor will not permit the performance of Work on a Sunday, or any legal holiday without Owner's written consent (which will not be unreasonably withheld) given after prior written notice to Engineer.

SC-6.06 *Concerning Subcontractors, Suppliers, and Others*

SC-6.06 Add the following new paragraphs immediately after Paragraph 6.06.G:

H. Owner may furnish to any Subcontractor or Supplier, to the extent practicable, information about amounts paid to Contractor on account of Work performed for Contractor by a particular Subcontractor or Supplier.

I. Owner may request identification of any Subcontractor, Supplier, individual or entity proposed for any portion of the work. In the event that the Owner requests any such identification, the apparent Successful Bidder, and any other Bidder so requested, shall submit such identification to Owner within the timeframe set forth in the Instructions to Bidders.

SC-6.08 *Permits*

SC-6.08B Add the following new paragraph immediately after Paragraph 6.08A:

Copyright © 2007 National Society of Professional Engineers for EJCDC. All rights reserved.

B. Owner will obtain the following permits (other permits may be required):

1. Van Buren County permit for soil erosion and sedimentation control.

2. MDEQ permit for water supply systems.

3. MDEQ permit for wastewater systems.

4. MDEQ/USACE Joint Permit.

SC-7.02 *Coordination*

SC-7.02 Delete Paragraph 7.02.A in its entirety and replace with the following:

A. Owner intends to contract with others for the performance of other work at the Project Site.

1. Owner will contract for the relocation of utility poles and overhead lines designated "by others" on the plans.

2. If existing utility systems which are not part of the Work (such as electric, phone, cable, communications, or gas utility systems) are found to be in conflict with the Work, Contractor shall immediately notify Engineer and utility system owner of the extent of the conflict. If Engineer determines that the Work cannot be completed without modifications to the utility system, Owner will cause the utility system Owner to modify the utility system. If modifications to utility systems are ordered, Contractor shall coordinate work schedules with parties performing work on the utility system, provide access for such work, and adjust Contractor's own work schedule to accommodate such work by others.

SC-7.04 *Claims Between Contractors*

SC-7.04 Add the following new paragraph immediately after paragraph GC-7.03:

SC-7.04 *Claims Between Contractors*

A. Should Contractor cause damage to the work or property of any other contractor at the Site, or should any claim arising out of Contractor's performance of the Work at the Site be made by any other contractor against Contractor, Owner,

Copyright © 2007 National Society of Professional Engineers for EJCDC. All rights reserved.

Engineer, or the construction coordinator, then Contractor (without involving Owner, Engineer, or construction coordinator) shall either (1) remedy the damage, (2) agree to compensate the other contractor for remedy of the damage, or (3) remedy the damage and attempt to settle with such other contractor by agreement, or otherwise resolve the dispute by arbitration or at law.

B. Contractor shall, to the fullest extent permitted by Laws and Regulations, indemnify and hold harmless Owner, Engineer, the construction coordinator and the officers, directors, partners, employees, agents and other consultants and subcontractors of each and any of them from and against all claims, costs, losses and damages (including, but not limited to, fees and charges of engineers, architects, attorneys, and other professionals and court and arbitration costs) arising directly, indirectly or consequentially out of any action, legal or equitable, brought by any other contractor against Owner, Engineer, consultants, or the construction coordinator to the extent said claim is based on or arises out of Contractor's performance of the Work. Should another contractor cause damage to the Work or property of Contractor or should the performance of work by any other contractor at the Site give rise to any other Claim, Contractor shall not institute any action, legal or equitable, against Owner, Engineer, or the construction coordinator or permit any action against any of them to be maintained and continued in its name or for its benefit in any court or before any arbiter which seeks to impose liability on or to recover damages from Owner, Engineer, or the construction coordinator on account of any such damage or Claim.

C. If Contractor is delayed at any time in performing or furnishing the Work by any act or neglect of another contractor, and Owner and Contractor are unable to agree as to the extent of any adjustment in Contract Times attributable thereto, Contractor may make a Claim for an extension of times in accordance with Article 12. An extension of the Contract Times shall be Contractor's exclusive remedy with respect to Owner, Engineer, and construction coordinator for any delay, disruption, interference, or hindrance caused by any other contractor. This paragraph does not prevent recovery from Owner, Engineer, or construction coordinator for activities that are their respective responsibilities.

Copyright © 2007 National Society of Professional Engineers for EJCDC. All rights reserved.

SC-9.03 *Project Representative*

SC-9.03 Add the following new paragraphs immediately after Paragraph 9.03.A:

B. The Resident Project Representative (RPR) will be Engineer's employee or agent at the Site, will act with the full authority as Engineer. RPR's dealings in matters pertaining to the Work in general shall be with Engineer and Contractor. RPR's dealings with Subcontractors shall be through or with the full knowledge and approval of Contractor. The RPR shall have authority to conduct any of the following activities, along with any other authority assigned to Engineer:

1. *Schedules:* Review the progress schedule, schedule of Shop Drawing and Sample submittals, and schedule of values prepared by Contractor and consult with Engineer concerning acceptability.

2. *Conferences and Meetings:* Attend meetings with Contractor, such as preconstruction conferences, progress meetings, job conferences and other project-related meetings, and prepare and circulate copies of minutes thereof.

3. *Interpretation of Contract Documents:* Provide clarifications and interpretations of the Contract Documents as needed.

4. *Shop Drawings and Samples:*

a. Record date of receipt of Samples and approved Shop Drawings.

b. Receive Samples which are furnished at the Site by Contractor, and notify Engineer of availability of Samples for examination.

5. *Modifications:* Consider and evaluate Contractor's suggestions for modifications in Drawings or Specifications. Transmit to Contractor in writing decisions as issued.

6. *Review of Work and Rejection of Defective Work*:

Copyright © 2007 National Society of Professional Engineers for EJCDC. All rights reserved.

a. Conduct on-Site observations of Contractor's work in progress to determine if the Work is in general proceeding in accordance with the Contract Documents.

b. Report to Engineer whenever RPR believes that any part of Contractor's work in progress will not produce a completed Project that conforms generally to the Contract Documents or will imperil the integrity of the design concept of the completed Project as a functioning whole as indicated in the Contract Documents, or has been damaged, or does not meet the requirements of any inspection, test or approval required to be made; and advise Engineer of that part of work in progress that RPR believes should be corrected or rejected or should be uncovered for observation, or requires special testing, inspection or approval.

7. *Inspections, Tests, and System Startups:*

a. Verify that tests are conducted in the presence of appropriate Owner's personnel, and that Contractor maintains adequate records thereof.

b. Observe and record appropriate details relative to the test procedures.

8. *Payment Requests:* Review Applications for Payment with Contractor for compliance with the established procedure for their submission and forward with recommendations to Engineer, noting particularly the relationship of the payment requested to the schedule of values, Work completed, and materials and equipment delivered at the Site but not incorporated in the Work.

9. *Completion*:

a. Participate in a Substantial Completion inspection, assist in the determination of Substantial Completion and the preparation of lists of items to be completed or corrected.

b. Participate in a final inspection in the company of Engineer, Owner, and Contractor and prepare a final list of items to be completed and deficiencies to be remedied.

Copyright © 2007 National Society of Professional Engineers for EJCDC. All rights reserved.

c. Observe whether all items on the final list have been completed or corrected and make recommendations to Engineer concerning acceptance and issuance of the Notice of Acceptability of the Work.

C. The RPR shall not:

1. Exceed limitations of Engineer's authority as set forth in the Contract Documents.

2. Undertake any of the responsibilities of Contractor, Subcontractors, Suppliers, or Contractor's superintendent.

3. Advise on, issue directions relative to, or assume control over any aspect of the means, methods, techniques, sequences or procedures of Contractor's work unless such advice or directions are specifically required by the Contract Documents.

4. Advise on, issue directions regarding, or assume control over safety practices, precautions, and programs in connection with the activities or operations of Owner or Contractor.

5. Accept Shop Drawing or Sample submittals from anyone other than Contractor.

SC-11.02 *Allowances*

SC-11.02. Delete Paragraphs 11.02.A and 11.02B in their entirety and insert the following in their place:

A. It is understood that Contractor shall cause the Work of all allowances named in the Contract Documents to be performed in accordance with the Contract Documents.

B. Cash Allowances: Any Work to be paid for by cash allowance shall be defined in the Contract Documents. All work not defined in the Contract Documents as being paid for by cash allowance, shall be considered included the Unit Price for other items of Work.

SC-11.03 *Unit Price Work*

SC-11.03.D Delete Paragraph 11.03.D in its entirety and insert the following in its place:

Copyright © 2007 National Society of Professional Engineers for EJCDC. All rights reserved.

D. The unit price of any item of Unit Price Work shall be subject to reevaluation and adjustment under the following conditions:

1. if the Bid price of a particular item of Unit Price Work, amounts to 5 percent or more of the Contract Price and the variation in the quantity of that particular item of Unit Price Work performed by Contractor differs by more than 25 percent from the estimated quantity of such item indicated in the Agreement; and

2. if there is no corresponding adjustment with respect to any other item of Work; and

3. if Contractor believes that Contractor has incurred additional expense as a result thereof or if Owner believes that the quantity variation entitles Owner to an adjustment in the unit price, either Owner or Contractor may make a Claim for an adjustment in the Contract Price in accordance with Article 10 if the parties are unable to agree as to the effect of any such variations in the quantity of Unit Price Work performed.

SC-12.03 Delays

SC-12.03B Add the following new sentences at the end of Paragraph 12.03B:

Contractor shall be required to coordinate its work with work by utility owners not under the control of Owner. Any disruptions, delays, or interruptions by utility owners not under the control of Owner will be considered for an adjustment in Contract Price or Contract Times ONLY if the disruption, delay, or interruption is of such significance as to prevent Contractor from performing ANY Work during the period of time for which the adjustment is requested.

SC-13.04 Uncovering Work

SC-13.04D Delete Paragraph 13.04.D in its entirety and insert the following in its place:

D. Contractor shall provide timely notice of intent to cover work. If Contractor has provided timely notice of intent to cover work, and if Engineer has not acted with reasonable promptness in response to such notice, and if Engineer has subsequently required work to be uncovered for the purposes of

Copyright © 2007 National Society of Professional Engineers for EJCDC. All rights reserved.

inspecting and testing, and if the uncovered Work is then not found to be defective, Contractor shall be allowed an increase in the Contract Price or an extension of the Contract Times, or both, directly attributable to such uncovering, exposure, observation, inspection, testing, replacement, and reconstruction. If the parties are unable to agree as to the amount or extent thereof, Contractor may make a Claim therefor as provided in Paragraph 10.05.

SC-14.02 *Progress Payments*

SC-14.02A Delete Paragraph 14.02.A.1 in its entirety and insert the following in its place:

1. **Engineer will generate one payment request each month, covering all work completed through the week ending prior to the first Monday of each month.**

SC-14.02B Delete Paragraph 14.02.B.1 in its entirety and insert the following in its place:

1. **Contractor shall review each payment request for accuracy and completeness. Contractor shall indicate approval of each payment request by signature on the form prepared by Engineer. Contractor shall return each signed payment request to Engineer no later than 10 days prior to the City Council meeting at which payment authorization is expected, otherwise the Engineer's recommendation may not appear on the intended City Council agenda, in which case the Engineer's recommendation shall be presented for the following City Council agenda. City Council meetings are held on the first and third Mondays of each month.**

SC-14.02C Delete Paragraph 14.02.C.1 in its entirety and insert the following in its place:

1. **No payment shall become due without authorization by the City Council. Seven (7) days after the City Council meeting at which the payment is authorized, the amount authorized will (subject to the provisions of Paragraph 14.02.D) become due, and when due will be paid by Owner to Contractor.**

SC-14.07 *Final Payment*

SC-14.07C Delete Paragraph 14.07.C.1 in its entirety and insert the following in its place:

1. **After Engineer's recommendation for Final Payment, Final Payment shall become due in accordance with the same times for Progress Payments as defined in SC14.02.C.**

END OF SECTION

Copyright © 2007 National Society of Professional Engineers for EJCDC. All rights reserved.

SECTION 01 10 00

SUMMARY

PART 1 GENERAL

1.1 SUMMARY:

A. Section Includes:
1. Work by Others.
2. Owner supplied products.
3. Contractor's use of site.
4. Specification Conventions.

1.2 PRICE AND PAYMENT PROCEDURES - UNIT PRICES

A. Mobilization, Max _____
1. Basis of Measurement: Lump Sum
2. Basis of Payment: Includes transportation of all equipment, materials, and personnel to and from site, rentals, storage, handling, delivery, cost of bonding and insurance, project administration and miscellaneous costs.
3. Basis of Application:
   a. This pay item will apply only if included on Bid Form. If not included on the Bid Form, all Work associated with this pay item will be considered incidental and will not be paid for separately.
   b. The Bidder shall not submit a lump sum price for Mobilization, Max that is higher than the maximum amount stated in the Bid Form. If Bidder's submitted lump sum price is higher than the maximum amount stated, the Bid will be adjusted to reflect the maximum amount.

1.3 WORK BY OTHERS

A. Where the Work of the Contract requires alterations to electric, telecommunications, or natural gas utility systems, such alterations shall be performed by others. Unless otherwise stated in the bidding documents, all other work shall be considered included in the Contract.

1.4 OWNER SUPPLIED PRODUCTS

A. Owner's Responsibilities:
1. Make products available for contractor pickup at South Haven Public Works.

B. Contractor's Responsibilities:
1. Notify owner of schedule for pickup and delivery.
2. Pickup and deliver to project site.
3. Handle, store, and install products.
4. Repair or replace items damaged after receipt.

C. Items furnished by Owner for installation by Contractor:
   1. Water meter
   2. Water meter fittings:
      a. Angle ball valve
      b. Angle meter coupling.

1.5 CONTRACTOR'S USE OF SITE

A. Limit use of site to allow:
   1. Work by Others.
   2. Use of site by City staff, Engineer, and all regulating authorities.
   3. Vehicular access to all properties within site.

B. Construction Operations: Limited to areas noted on Drawings.

C. Time Restrictions for Performing Work (except in connection with the safety or protection of persons or the Work or property at the Site):
   1. Monday through Saturday (except legal holidays): 7:00 am to 6:00 pm.
   2. Sundays or legal holidays: not without written approval from City.

D. Private easements:
   1. Owner will obtain all necessary easements required for construction across private property.
      a. Verify that easements have been obtained prior to initiation of the Work.
      b. Conduct the Work in such a manner as to cause a minimum of inconvenience to the occupants of the properties.
   2. Any agreement made by Contractor with any property owner that extends the rights as granted under an easement obtained by Owner or that provides for an additional easement shall be obtained by Contractor at Contractor's expense and shall in no way be binding upon Owner. Contractor shall defend and hold harmless Owner against any action that may arise from activities conducted pursuant to such additional agreements or easements. Unless relieved of responsibility for surface restoration in writing by property owner, Contractor shall restore areas covered by separate agreements equal to the original condition.

1.6 SPECIFICATION CONVENTIONS

A. These specifications are written in imperative mood and streamlined form. This imperative language is directed to the Contractor, unless specifically noted otherwise. The words "shall be" are included by inference where a colon (:) is used within sentences or phrases.

PART 2 PRODUCTS - Not Used

PART 3 EXECUTION - Not Used

END OF SECTION

SECTION 01 20 00

PRICE AND PAYMENT PROCEDURES

PART 1 GENERAL

1.1 SUMMARY

A. Section Includes:
1. Progress Payments.
2. Change procedures.
3. Defect assessment.
4. Unit prices.
5. Alternates.

1.2 PROGRESS PAYMENTS

A. Payment Period: One payment per month, covering all work completed through the week ending prior to the first Monday of each month.

B. Engineer shall generate all payment requests and obtain Contractor approval and signature prior to submitting to Owner for payment. Do not submit invoices to Owner.

C. Sign each payment request and return to Engineer.

D. Engineer shall submit signed payment request to Owner for payment.

1.3 CHANGE PROCEDURES

A. Submittals: Submit name of individual authorized to receive change documents, and be responsible for informing others in Contractor's employ or Subcontractors of changes to the Work.

B. For minor changes which do not involve a change in Contract Price or Contract Time, the Engineer may issue a Field Order.

C. For changes which necessitate a change in Contract Price or Contract Time, the Engineer shall issue a Change Order. Change Order will be executed on fixed unit price basis. For unit costs or quantities of units of work which are not pre-determined, changes in Contract Price or Contract Time will be computed as specified in GC12.01.

D. For changes which necessitate a change in Contract Price or Contract Time, but the amount of the change in Contract Price or Contract Time has not yet been agreed upon, the Engineer may issue a Work Change Directive for subsequent inclusion in a Change Order. Work Change Directive will describe changes in the Work and method of determining the change in Contract Price or Contract Time. Promptly execute change.

E. Contractor may propose changes by submitting a request for change to Engineer, describing proposed change and its full effect on the Work. Include a statement describing reason for the change, and effect on Contract Price and Contract Time with full documentation.

F. Change Forms:
1. EJCDC C-940 Work Change Directive
2. EJCDC C-941 Change Order
3. EJCDC C-942 Field Order

G. Execution of Change Orders: Engineer will issue Change Orders for signatures of parties as provided in Conditions of the Contract. Upon execution by both parties, Engineer will revise the form of payment requests to include the authorized changes.

1.4 DEFECT ASSESSMENT

A. Replace the Work, or portions of the Work, not conforming to specified requirements.

B. If, in the opinion of the Engineer, it is not practical to remove and replace the Work, the Engineer will direct appropriate remedy or adjust payment.

C. The defective Work may remain, but unit price will be adjusted to new price at discretion of Engineer.

D. Defective Work will be partially repaired to instructions of Engineer, and unit price will be adjusted to new price at discretion of Engineer.

E. Individual specification sections may modify these options or may identify specific formula or percentage price reduction.

F. Authority of Engineer to assess defects and identify payment adjustments is final.

G. Non-Payment For Rejected Products: Payment will not be made for rejected products for any of the following:
1. Products wasted or disposed of in a manner that is not acceptable.
2. Products determined as unacceptable before or after placement.
3. Products placed beyond lines and levels of required Work.
4. Products remaining on hand after completion of the Work.
5. Loading, hauling, and disposing of rejected products.

1.5 UNIT PRICES

A. Authority: Measurement methods are delineated in individual specification sections.

B. Measurement methods delineated in individual specification sections complement criteria of this section. In event of conflict, requirements of individual specification sections govern.

C. Take measurements and compute all payment quantities for work completed each day. Engineer will verify measurements and quantities. Engineer's record of quantities shall provide the basis for each progress payment.

D. Unit Quantities: Quantities and measurements indicated in Bid Form are estimated for bidding and contract purposes only. Actual quantities provided shall determine payment. When actual Work requires more or fewer quantities than those quantities indicated, provide required quantities.

E. Payment Includes: Full compensation for required labor, products, tools, equipment, plant and facilities, transportation, services and incidentals; erection, application or installation of item of the Work; overhead and profit.

F. Final payment for Work governed by unit prices will be made on basis of actual measurements and quantities accepted by Engineer multiplied by unit price for Work incorporated in or made necessary by the Work.

G. Measurement Of Quantities:
   1. Weigh Scales: Inspected, tested and certified by State of Michigan within past year.
   2. Platform Scales: Of sufficient size and capacity to accommodate conveying vehicle.
   3. Measurement by Volume: Measured by cubic dimension using mean length, width and height or thickness.
   4. Measurement by Area: Measured by square dimension using mean length and width or radius.
   5. Measurement by Length: Measured by linear dimension, at item centerline or mean chord.

PART 2 PRODUCTS - Not Used

PART 3 EXECUTION - Not Used

END OF SECTION

SECTION 01 30 00

ADMINISTRATIVE REQUIREMENTS

PART 1 GENERAL

1.1 SUMMARY

A. Section Includes:
1. Coordination and project conditions.
2. Field engineering.
3. Preconstruction meeting.
4. Progress meetings.
5. Special procedures.

1.2 COORDINATION AND PROJECT CONDITIONS

A. Coordinate scheduling, submittals, and Work of various sections of Project Manual to ensure efficient and orderly sequence of installation of interdependent construction elements.

1.3 FIELD ENGINEERING, LAND SURVEYING, AND CONSTRUCTION STAKING

A. Owner will employ Surveyor registered in State of Michigan and acceptable to Engineer.

B. Locate survey control points, benchmarks, and property corners prior to starting work.

C. Protect survey control points, benchmarks, and property corners throughout the duration of the work.

D. Promptly report to Engineer any survey control points, benchmarks, and property corners requiring relocation because of changes in grades or other reasons

E. Owner employed Surveyor will replace dislocated survey control points, benchmarks, and property corners based on original survey at Contractor's expense. Pay cost.

F. Owner employed Surveyor will provide stakes at Contractor's request. Submit staking requests to Surveyor with copy to Engineer with minimum 48 hours notice. If staking requests require less than 48 hour response time, Surveyor may charge Contractor a fee for expedited service. Pay cost.

G. Protect stakes from damage or dislocation as evidence that completed work has conformed to stakes. Do not remove stakes until directed by Engineer.

H. All requested stakes will be provided for Contractor free of charge one time only. Protect stakes. Request restaking for dislocated stakes. Restaking will be provided by Surveyor at Contractor's expense. Pay cost.

I. Payments due to Surveyor from Contractor will be charged to Contractor by deducting charges from Contract Price.

1.4 PRECONSTRUCTION MEETING

A. A preconstruction meeting shall be held prior to beginning the Work.

B. Engineer will schedule meeting after Notice of Award, make arrangements for meeting, prepare agenda with copies for participants, notify participants of time and location at least four days in advance, and preside at meeting.

C. Attendance Required:
1. Owner.
2. Engineer.
3. Contractor.
4. Major Subcontractors.
5. City.
6. All regulating authorities which are affected by the Work.
7. Private utility companies which are affected by the Work.

D. Minimum Agenda:
1. Verify prior execution of Owner-Contractor Agreement.
2. Submission of executed bonds and insurance certificates.
3. Distribution of Contract Documents.
4. Submission of list of Subcontractors, list of products, and progress schedule.
5. Designation of personnel representing all parties and distribution of contact information for each.
6. Schedule of progress meetings.
7. Review project schedule.
8. Review inspection and testing procedures and responsibilities.
9. Review any temporary utility needs.
10. Review hours of operation.
11. Review procedures for maintaining record documents.

E. Engineer will record minutes and distribute copies to all participants.

1.5 PROGRESS MEETINGS

A. Engineer will administer monthly progress meetings on site, to be scheduled for the Tuesday prior to the first Monday of each month, or as otherwise agreed upon at the preconstruction meeting.

B. Attendance Required:
1. Job superintendent.
2. Engineer.
3. Major subcontractors and suppliers as appropriate to the agenda.
4. Owner’s representative as appropriate to the agenda.
5. City or other regulatory authorities as appropriate to the agenda.
6. Private utility companies as appropriate to the agenda.

C. Minimum Agenda:
1. Review of Work progress.
2. Field observations, problems, and decisions.
3. Identification of problems impeding planned progress.
4. Scheduling and Coordination.
5. Change Orders.
6. Payment Application.

PART 2 PRODUCTS - Not Used

PART 3 EXECUTION

3.1 SPECIAL PROCEDURES

A. Materials: Perform all work with specified products. All products shall be new, unless the approval of salvaged products is provided for in the individual product sections.

B. Employ skilled and experienced persons to perform alteration work.

C. Remove unsuitable material not marked for salvage, including rotted wood, corroded metals, and deteriorated masonry and concrete. Replace materials as specified for finished Work.

D. Where new Work abuts or aligns with existing, provide smooth and even transition.

E. Call MISS DIG at 1-800-482-7171 or 811 not less than three full working days before performing any portion of the Work that involves any soil disturbance.
1. Request underground utilities to be located and marked within and surrounding construction areas.

F. Protect all existing structures and utilities.
1. Pay cost of cleaning, repair, relocation, raising, lowering, or replacement of structures and utilities which interfere with the Work or which are damaged as a result of Contractor's operations.
2. Supply, utilize and pay for all temporary sheeting, bracing, poles, cables, sand fill or other means used to support a structure or utility exposed or endangered by Contractor's operations.
3. Be responsible for temporary and permanent relocation of power, light, telephone and other service poles and appurtenant structures.
4. Make necessary arrangements with the owner of the pole or structure and pay all costs involved.
5. Pay cost of replacing any pavement (including roads, driveways, and sidewalks) which is damaged as a result of Contractor's operations.
6. Pay cost of any landscaping or tree replacement due to damage as a result of Contractor's operations.

7. Pay cost of replacing any damaged fences, mailboxes, signs, guard posts, culverts, irrigation systems or similar items which are damaged as a result of Contractor's operations.

G. Property corners, Government survey corners, and plat monuments:
   1. Protect from damage or disturbance.
   2. Replace if disturbed or removed as a result of construction
      a. Arrange for replacement by a licensed professional surveyor.
      b. Pay all costs.

END OF SECTION

SECTION 01 33 00

SUBMITTAL PROCEDURES

PART 1 GENERAL

1.1 SUMMARY

A. Section Includes:
1. Submittal procedures.
2. Construction progress schedules.
3. Proposed products list.
4. Product data.
5. Shop drawings.
6. Test reports.
7. Certificates.
8. Manufacturer's instructions.

1.2 SUBMITTAL PROCEDURES

A. Transmit each submittal with Engineer accepted form.

B. Sequentially number transmittal forms. Mark revised submittals with original number and sequential alphabetic suffix.

C. Identify Project, Contractor, subcontractor and supplier; pertinent drawing and detail number, and specification section number, appropriate to submittal.

D. Apply Contractor's stamp, signed or initialed, certifying that review, approval, verification of products required, field dimensions, adjacent construction Work, and coordination of information is in accordance with requirements of the Work and Contract Documents.

E. Schedule submittals to expedite Project, and deliver to Engineer at business address. Coordinate submission of related items.

F. Identify variations from Contract Documents and product or system limitations which may be detrimental to successful performance of completed Work.

G. When revised for resubmission, identify changes made since previous submission.

H. Distribute copies of reviewed submittals as appropriate. Instruct parties to promptly report inability to comply with requirements.

1.3 CONSTRUCTION PROGRESS SCHEDULES

A. Submit initial schedule within 15 days after date of Owner-Contractor Agreement.

B. Submit revised Progress Schedules with each Application for Payment.

C. Indicate reasons for delays and impact on schedule.

D. Indicate corrective actions needed or taken.

1.4 PROPOSED PRODUCTS LIST

A. Within 15 days after date of Owner-Contractor Agreement, submit list of major products proposed for use, with name of manufacturer, trade name, and model number of each product.

B. For products specified only by reference standards, give manufacturer, trade name, model or catalog designation, and reference standards.

1.5 PRODUCT DATA

A. Product Data: Submit to Engineer for review for limited purpose of checking for conformance with information given and design concept expressed in Contract Documents.

B. Submit number of copies Contractor requires, plus one copy Engineer will retain.

C. Mark each copy to identify applicable products, models, options, and other data. Supplement manufacturers' standard data to provide information specific to this Project.

D. Retain minimum one copy for project record documents described in section 01 70 00 Execution and Closeout Requirements.

1.6 SHOP DRAWINGS

A. Shop Drawings: Submit to Engineer for review for limited purpose of checking for conformance with information given and design concept expressed in Contract Documents.

B. Submit number of copies Contractor requires, plus one copy Engineer will retain.

C. Retain minimum one copy for project record documents described in Section 01 70 00 - Execution and Closeout Requirements.

1.7 TEST REPORTS

A. Submit testing and inspection reports to Engineer for limited purpose of verifying conformance with Contract Documents.

1.8 CERTIFICATES

A. When specified in individual specification sections, submit certifications to Engineer, in quantities specified for Product Data.

B. Indicate material or product conforms to or exceeds specified requirements. Submit supporting reference data, affidavits, and certifications as appropriate.

C. Certificates may be recent or previous test results on material or Product, but must be acceptable to Engineer.

1.9 MANUFACTURER'S INSTRUCTIONS

A. When specified in individual specification sections, submit printed instructions for delivery, storage, assembly, installation, adjusting, and finishing, to Engineer for delivery to Owner in quantities specified for Product Data.

PART 2 PRODUCTS - Not Used

PART 3 EXECUTION - Not Used

END OF SECTION

SECTION 01 40 00

QUALITY REQUIREMENTS

PART 1 GENERAL

1.1 SUMMARY

A. Section Includes:
1. Quality control and control of installation.
2. Tolerances.
3. References.
4. Labeling.
5. Testing and inspection services.
6. Manufacturers' field services.
7. Examination.
8. Preparation.

1.2 QUALITY CONTROL AND CONTROL OF INSTALLATION

A. Monitor quality control over suppliers, manufacturers, products, services, site conditions, and workmanship, to produce Work of specified quality.

B. Comply with manufacturers' instructions, including each step in sequence.

C. When manufacturers' instructions conflict with Contract Documents, request clarification from Engineer before proceeding.

D. Comply with specified standards as minimum quality for the Work except where more stringent tolerances, codes, or specified requirements indicate higher standards or more precise workmanship.

E. Perform Work by persons qualified to produce required and specified quality.

F. Verify field measurements are as indicated on Shop Drawings or as instructed by manufacturer.

G. Secure products in place with positive anchorage devices designed and sized to withstand stresses, vibration, physical distortion, or disfigurement.

1.3 TOLERANCES

A. Monitor fabrication and installation tolerance control of products to produce acceptable Work. Do not permit tolerances to accumulate.

B. Comply with manufacturers' tolerances. When manufacturers' tolerances conflict with Contract Documents, request clarification from Engineer before proceeding.

C. Adjust products to appropriate dimensions; position before securing products in place.

1.4 REFERENCES

A. For products or workmanship specified by association, trade, or other consensus standards, comply with requirements of standard, except when more rigid requirements are specified or are required by applicable codes.

B. Conform to reference standard by date of issue current on date of receiving bids, except where specific date is established by code.

C. Obtain copies of standards where required by product specification sections.

D. When specified reference standards conflict with Contract Documents, request clarification from Engineer before proceeding.

E. Neither contractual relationships, duties, nor responsibilities of parties in Contract nor those of Engineer shall be altered from Contract Documents by mention or inference otherwise in reference documents.

1.5 TESTING AND INSPECTIONS BY CONTRACTOR

A. Where individual specification sections require, conduct testing and inspections.

B. Perform testing and inspections in accordance with the following sections:
1. Section 32 13 13 - Concrete Paving: Source Quality Control and Tests
2. Section 32 91 19 - Landscape Grading
3. Section 33 01 30.13 - Sewer and Manhole Testing
4. Section 33 01 30.16 - TV Inspection of Sewer Pipelines
5. Section 33 11 13 - Public Water Utility Distribution Piping
6. Section 33 13 00 - Disinfecting of Water Utility Distribution

C. Engineer shall review Contractor's testing reports to verify that the Work is in conformance with specifications.

D. Testing and Inspection Reports: At a minimum, testing and inspection reports shall contain the following information:
1. Project title.
2. Name of personnel conducting testing and inspections.
3. Description of testing and inspection procedures.
4. Date and time of testing or inspection.
5. Location in Project.
6. Results of tests.
7. Conformance with Contract Documents.
8. Other information as required in individual specification sections.

1.6 TESTING AND INSPECTIONS BY OWNER

A. Owner will employ and pay for services of an independent firm to perform testing and inspections in accordance with the following sections:
   1. Section 31 22 13 - Rough Grading
   2. Section 31 23 23.33 - Flowable Fill
   3. Section 31 23 33 - Trenching and Backfilling
   4. Section 32 11 16 - Subbase Courses
   5. Section 32 11 23 - Aggregate Base Courses
   6. Section 32 12 16 - Asphalt Paving
   7. Section 32 13 13 - Concrete Paving: Field Quality Control
   8. Section 33 11 13 - Public Water Utility Distribution Piping
   9. Section 33 12 13 - Water Service Connections
   10. Section 33 31 13 - Public Sanitary Utility Sewerage Piping
   11. Section 33 34 00 - Sanitary Utility Sewerage Force Mains
   12. Section 33 41 13 - Public Storm Utility Drainage Piping
   13. Section 33 46 16 - Subdrainage Piping

B. Owner reserves the right to inspect any portion of the Work at any time.

C. The independent firm will perform tests, inspections and other services specified in individual specification sections and as required by authority having jurisdiction.

D. Testing, inspections and source quality control may occur on or off project site.

E. Reports will be submitted by independent firm to Engineer, indicating observations and results of tests and indicating compliance or non-compliance with Contract Documents.

F. Cooperate with independent firm; furnish samples of materials, design mix, equipment, tools, storage, safe access, and assistance by incidental labor as requested.
   1. Notify Engineer and independent firm 48 hours prior to expected time for operations requiring services, or as specified in individual specification sections.
   2. Make arrangements with independent firm and pay for additional samples and tests required for Contractor's use.
   3. Provide access to each layer of bedding and backfill for testing.

G. Testing and employment of testing agency or laboratory shall not relieve Contractor of obligation to perform Work in accordance with requirements of Contract Documents.

H. Re-testing or re-inspection required because of non-conformance to specified requirements shall be performed by same independent firm on instructions by Engineer. Payment for re-testing or re-inspection will be charged to Contractor by deducting testing charges from Contract Price.

I. Limits On Testing Firm:
   1. Testing Firm or laboratory may not release, revoke, alter, or enlarge on requirements of Contract Documents.
   2. Testing Firm or laboratory may not approve or accept any portion of the Work.
   3. Testing Firm or laboratory may not assume duties of Contractor.

4. Testing Firm or laboratory has no authority to stop the Work.

1.7 MANUFACTURERS' FIELD SERVICES

A. When specified in individual specification sections, require material or product suppliers or manufacturers to provide qualified staff personnel to observe site conditions, conditions of surfaces and installation, quality of workmanship, and to provide instruction when necessary.

B. Report observations and site decisions or instructions given to Contractor that are supplemental or contrary to manufacturers' written instructions.

PART 2 PRODUCTS - Not Used

PART 3 EXECUTION - Not Used

END OF SECTION

SECTION 01 50 00

TEMPORARY FACILITIES AND CONTROLS

PART 1 GENERAL

1.1 SUMMARY

A. Section Includes:
1. Temporary Utilities:
   a. Temporary electricity.
   b. Temporary water service.
   c. Temporary sanitary facilities.
2. Construction Facilities:
   a. Vehicular access.
   b. Parking.
   c. Progress cleaning and waste removal.
   d. Traffic regulation.
3. Temporary Controls:
   a. Barriers.
   b. Water control.
   c. Dust control.
   d. Erosion and sediment control.
   e. Noise control.
   f. Pollution control.
4. Removal of utilities, facilities, and controls.

1.2 PRICE AND PAYMENT PROCEDURES - UNIT PRICES

A. Temporary Traffic Control:
1. Basis of Measurement: Lump Sum
2. Basis of Payment: Includes all temporary traffic control measures which are needed to maintain traffic in accordance with applicable laws and regulations. Includes supplying materials and maintenance throughout the duration of the project.
3. Basis of Application:
   a. This pay item will apply only if included on Bid Form. If not included on the Bid Form, all Work associated with this pay item will be considered incidental and will not be paid for separately.
   b. Alternatively, payment for traffic control devices may be provided for in the Bid Form in accordance with the Michigan Department of Transportation (MDOT) 2012 Standard Specifications for Construction.

B. Maintenance Gravel, <u>(type):</u>
1. Basis of Measurement: Cubic Yard
2. Bases of Payment: Includes supply, installation, and removal of temporary aggregate used for maintaining public access through site.
3. Basis of Application:

a. This pay item will apply when offsite material must be imported for use. This pay item will not apply to the use of salvaged aggregate.

C. All other work of this section:
1. Basis of Measurement: Not Applicable
2. Basis of Payment: Work shall be incidental to the project.

1.3 REFERENCES

A. Michigan Department of Transportation (MDOT):
1. MDOT 2012 Standard Specifications for Construction.

1.4 TEMPORARY ELECTRICITY

A. Request temporary electric service from Owner.
1. Submit a written request to Engineer which identifies desired location of meter, type of service (3 phase or single phase), voltage, and peak demand (amps).

B. Obtain electrical permit from Michigan Township Services.

C. Obtain meter base from South Haven Public Works.

D. Install meter base and all required electrical work downstream of the meter base.

E. Comply with all electrical code requirements.

F. Obtain electrical inspection from Michigan Township Services.

G. South Haven Public Works will install all required electrical work upstream of the meter base and will energize the meter after the meter base and downstream installation has passed inspection by Michigan Township Services.

H. Owner will pay all costs due and payable to South Haven Public Works, pay all other costs.

1.5 TEMPORARY WATER SERVICE

A. Request temporary water service from South Haven Public Works.

B. City water department will install service connection with city provided meter.

C. Pay all costs.

D. Submit invoices to Engineer.

E. Owner will reimburse contractor for expenses.

1.6 TEMPORARY SANITARY FACILITIES

A. Provide and maintain required facilities and enclosures throughout the duration of the Work.

1.7 VEHICULAR ACCESS

A. Maintain vehicular access to all driveways for public use at all times.

B. Construct temporary access roads of width and load bearing capacity to accommodate traffic.

C. Construct temporary bridges and culverts to span low areas and allow unimpeded drainage.

D. Extend and relocate vehicular access as Work progress requires, provide detours as necessary for unimpeded traffic flow.

E. Provide unimpeded access for emergency vehicles.

F. Provide and maintain access to fire hydrants. Keep fire hydrants free of obstructions.

G. Provide means of removing mud from vehicle wheels before entering streets.

1.8 PARKING

A. Allow legal parking on public streets or within site only.

B. Do not allow parking on private property unless otherwise permitted in writing by property owner.

1.9 PROGRESS CLEANING AND WASTE REMOVAL

A. Maintain areas free of waste materials, debris, and rubbish. Maintain site in clean and orderly condition.

B. Collect and remove waste materials, debris, and rubbish from site daily and dispose off-site.

1.10 TRAFFIC REGULATION

A. Provide and maintain traffic control in accordance with the current Michigan Manual on Uniform Traffic Control Devices (MMUTCD) and Michigan Department of Transportation (MDOT) “Maintaining Traffic Typicals”.

B. Haul Routes:
   1. Consult with City Engineer to determine approved haul routes within the city.
   2. Confine construction traffic to approved haul routes.

C. Traffic Control Devices:
   1. Provide traffic control devices configured according to applicable MDOT Maintaining Traffic Typicals to meet the specified Traffic Control Requirements stated on plans.

D. Relocation:
   1. Relocate traffic control devices as Work progresses to maintain effective traffic control.

E. Removal:
   1. Remove equipment and devices when no longer required.
   2. Repair damage caused by installation.

1.11 SECURITY

A. Security Program:
   1. Protect Work from theft, vandalism, and unauthorized entry.
   2. Initiate program at project mobilization.
   3. Maintain program throughout construction period until Substantial Completion.
   4. Repair or replace Work damaged by theft or vandalism, pay cost.

1.12 WATER CONTROL

A. Grade site to drain. Maintain excavations free of water. Provide, operate, and maintain pumping equipment.

B. Protect site from puddling or running water. Provide water barriers as required to protect site from soil erosion.

1.13 DUST CONTROL

A. Execute Work by methods to minimize raising dust from construction operations.

B. Apply water or brine to site to control dust.

1.14 EROSION AND SEDIMENT CONTROL

A. Plan and execute construction by methods to control surface drainage from cuts and fills, and from borrow and waste disposal areas. Prevent erosion.

B. Minimize surface area of bare soil exposed at one time.

C. Provide temporary measures including berms, dikes, drains, and other devices to control water flow.

D. Inspect earthwork minimum once per week to detect evidence of erosion and sedimentation; promptly apply corrective measures.

1.15 NOISE CONTROL

A. Comply with City of South Haven Ordinances regarding noise.

1.16 POLLUTION CONTROL

A. Provide methods, means, and facilities to prevent contamination of soil, water, and atmosphere from discharge of noxious, toxic substances, and pollutants produced by construction operations.

B. Comply with pollution and environmental control requirements of authorities having jurisdiction.

1.17 REMOVAL OF UTILITIES, FACILITIES, AND CONTROLS

A. Remove temporary utilities, equipment, facilities, and materials, prior to final inspection.

B. Clean and repair damage caused by installation or use of temporary work.

C. Restore existing facilities used during construction to original condition.

PART 2 PRODUCTS

2.1 MATERIALS

A. Maintenance Gravel:
1. Use salvaged aggregate as defined in MDOT 2012 Standard Specifications for Construction, Section 902.02.
2. If salvaged aggregate is not available or if directed by Engineer, use Dense-Graded Aggregate per MDOT 2012 Standard Specifications for Construction, Section 902.05. Dense-Graded Aggregate may be Class 21A, 21AA, 22A, or 23A per Table 902-1.

PART 3 EXECUTION - Not Used

END OF SECTION

SECTION 01 60 00

PRODUCT REQUIREMENTS

PART 1 GENERAL

1.1 SUMMARY

A. Section Includes:
1. Products.
2. Product delivery requirements.
3. Product storage and handling requirements.
4. Product options.
5. Product substitution procedures.

1.2 PRODUCTS

A. Furnish products of qualified manufacturers suitable for intended use. Furnish products of each type by single manufacturer unless specified otherwise.

B. The use of industrial byproducts, covered in 2014 PA 178, is prohibited for this project unless the use and application of a particular material is covered elsewhere in the Specifications.

1.3 PRODUCT DELIVERY REQUIREMENTS

A. Transport and handle products in accordance with manufacturer's instructions.

B. Promptly inspect shipments to ensure products comply with requirements, quantities are correct, and products are undamaged.

C. Provide equipment and personnel to handle products by methods to prevent soiling, disfigurement, or damage.

1.4 PRODUCT STORAGE AND HANDLING REQUIREMENTS

A. Store and protect products in accordance with manufacturers' instructions.

B. Store with seals and labels intact and legible.

C. Store sensitive products in weather tight, climate controlled enclosures in an environment favorable to product.

D. Provide off-site storage and protection when site does not permit on-site storage or protection.

E. Cover products subject to deterioration with impervious sheet covering. Provide ventilation to prevent condensation and degradation of products.

F. Store loose granular materials on solid flat surfaces in well-drained area. Prevent mixing with foreign matter.

G. Provide equipment and personnel to store products by methods to prevent soiling, disfigurement, or damage.

H. Arrange storage of products to permit access for inspection. Periodically inspect to verify products are undamaged and are maintained in acceptable condition.

1.5 PRODUCT OPTIONS

A. Products Specified by Reference Standards or by Description Only: Any product meeting those standards or description.

B. Products Specified by Naming One or More Manufacturers: Products of one of manufacturers named and meeting specifications, no options or substitutions allowed.

C. Products Specified by Naming One or More Manufacturers with Provision for Substitutions: Submit request for substitution for any manufacturer not named in accordance with the following article.

1.6 PRODUCT SUBSTITUTION PROCEDURES

A. Engineer will consider requests for Substitutions within 15 days after the effective date of Owner/Contractor agreement.

B. Engineer will not be bound to any time limitations for review of substitution requests. Contractor shall not receive any adjustment to completion schedules because of product substitution requests.

C. Substitutions may be considered when a product becomes unavailable through no fault of Contractor.

D. Document each request with complete data substantiating compliance of proposed Substitution with Contract Documents.

E. A request constitutes a representation that Contractor:
1. Has investigated proposed product and determined that it meets or exceeds quality level of specified product.
2. Will provide same warranty for Substitution as for specified product.
3. Will coordinate installation and make changes to other Work which may be required for the Work to be complete with no additional cost to Owner.
4. Waives claims for additional costs or time extension which may subsequently become apparent.
5. Will reimburse Owner and Engineer for review or redesign services associated with re-approval by authorities having jurisdiction.

F. Substitutions will not be considered when they are indicated or implied on Shop Drawing or Product Data submittals, without separate written request, or when acceptance will require revision to Contract Documents.

G. Substitution Submittal Procedure:
   1. Submit three copies of request for Substitution for consideration. Limit each request to one proposed Substitution.
   2. Submit Shop Drawings, Product Data, and certified test results attesting to proposed product equivalence. Burden of proof is on Contractor.
   3. Engineer will notify Contractor in writing of decision to accept or reject request.

PART 2 PRODUCTS - Not Used

PART 3 EXECUTION - Not Used

END OF SECTION

SECTION 01 70 00

EXECUTION AND CLOSEOUT REQUIREMENTS

PART 1 GENERAL

1.1 SUMMARY

A. Section Includes:
1. Closeout procedures.
2. Final cleaning.
3. Protecting installed construction.
4. Project record documents.
5. Operation and maintenance data.
6. Product warranties.

1.2 CLOSEOUT PROCEDURES

A. Submit written certification that Contract Documents have been reviewed, Work has been inspected, and that Work is complete in accordance with Contract Documents and ready for Engineer's review.

B. Submit final Application for Payment identifying total adjusted Contract Sum, previous payments, and sum remaining due.

1.3 FINAL CLEANING

A. Execute final cleaning prior to final project assessment.

B. Wash dust from impacted adjacent structures and buildings upon request.

C. Clean site; sweep paved areas, rake clean landscaped surfaces.

D. Remove waste and surplus materials, rubbish, and construction facilities from site.

1.4 PROTECTING INSTALLED CONSTRUCTION

A. Protect installed Work and provide special protection where specified in individual specifications sections.

B. Provide temporary and removable protection for installed products. Control activity in immediate work area to prevent damage.

C. Prohibit traffic from newly paved areas until pavement has cooled or cured and is able to support imposed traffic loads without damaging pavement.

D. Prohibit traffic from landscaped areas.

1.5 PROJECT RECORD DOCUMENTS

A. Maintain on site one set of the following record documents; record actual revisions to the Work:
   1. Drawings.
   2. Specifications.
   3. Addenda.
   4. Change Orders and other modifications to the Contract.
   5. Reviewed Shop Drawings, Product Data, and Samples.
   6. Source Location and Names of Material Suppliers
   7. Manufacturer's instructions for assembly, installation, and adjusting.
   8. Test Reports of all Field Tests indicating conformance or non-conformance with specifications.

B. Ensure entries are complete and accurate, enabling future reference by Owner.

C. Store record documents separate from documents used for construction.

D. Record information concurrent with construction progress, not less than weekly.

E. Specifications: Legibly mark and record at each product section any variation from specified products including description of actual products installed, including the following:
   1. Manufacturer's name and product model and number.
   2. Product substitutions or alternates utilized.
   3. Changes made by Addenda and modifications.

F. Record Drawings: Legibly mark each item to record actual construction including:
   1. Measured locations of underground utilities. Refer to individual specification sections for list of required measurements.
   2. Field changes of dimension and detail.
   3. Details not on original Contract drawings.

G. Submit documents to Engineer with final Application for Payment.

1.6 OPERATION AND MAINTENANCE DATA

A. Submit data bound in 8-1/2 x 11 inch text pages, three D side ring binders with durable plastic covers.

B. Prepare binder cover with printed title "OPERATION AND MAINTENANCE INSTRUCTIONS", title of project, and subject matter of binder when multiple binders are required.

C. Internally subdivide binder contents with permanent page dividers, logically organized as described below; with tab titling clearly printed under reinforced laminated plastic tabs.

D. Drawings: Provide with reinforced punched binder tab. Bind in with text; fold larger drawings to size of text pages.

E. Contents: Prepare Table of Contents for each volume, with each product or system description identified, typed on white paper, in three parts as follows:
   1. Part 1: Directory, listing names, addresses, and telephone numbers of Engineer, Contractor, Subcontractors, and major equipment suppliers.
   2. Part 2: Operation and maintenance instructions, arranged by system and subdivided by specification section. For each category, identify names, addresses, and telephone numbers of Subcontractors and suppliers. Identify the following:
      a. Significant design criteria.
      b. List of equipment.
      c. Parts list for each component.
      d. Operating instructions.
      e. Maintenance instructions for equipment and systems.
      f. Maintenance instructions for special finishes, including recommended cleaning methods and materials, and special precautions identifying detrimental agents.
   3. Part 3: Project documents and certificates, including the following:
      a. Shop drawings and product data.
      b. Air and water balance reports.
      c. Certificates.
      d. Originals of warranties.

1.7 PRODUCT WARRANTIES

A. Obtain warranties executed in duplicate by responsible subcontractors, suppliers, and manufacturers, within thirty days after completion of applicable item of work.

B. Execute and assemble transferable warranty documents from subcontractors, suppliers, and manufacturers.

C. Verify documents are in proper form, contain full information, and are notarized.

D. Co-execute submittals when required.

E. Include Table of Contents and assemble in three D side ring binder with durable plastic cover.

F. Submit prior to final Application for Payment

G. Time of Submittals:
   1. For equipment or component parts of equipment put into service during construction with Owner's permission, submit documents within fourteen days after acceptance.
   2. Make other submittals within thirty days after Date of Substantial Completion, prior to final Application for Payment.
   3. For items of Work for which acceptance is delayed beyond Date of Substantial Completion, submit within fourteen days after acceptance, listing date of acceptance as beginning of warranty period.

PART 2 PRODUCTS - Not Used

PART 3 EXECUTION - Not Used

END OF SECTION

SECTION 01 74 19

CONSTRUCTION WASTE MANAGEMENT AND DISPOSAL

PART 1 GENERAL

1.1 SUMMARY

A. Section Includes:
   1. Construction Waste Collection and Disposal.

PART 2 PRODUCTS - Not Used

PART 3 EXECUTION

3.1 CONSTRUCTION WASTE COLLECTION

A. Collect construction waste materials in marked bins or containers and arrange for transportation to recycling centers or adaptive salvage and reuse processing facilities.

B. Store construction waste materials to prevent environmental pollution, fire hazards, hazards to persons and property, and contamination of stored materials.

C. Cover construction waste materials subject to disintegration, evaporation, settling, or runoff to prevent polluting air, water, and soil.

3.2 CONSTRUCTION WASTE DISPOSAL

A. Dispose of construction waste which is not capable of being recycled by delivery to landfill, incinerator, or other legal disposal facility. Obtain receipt for deliveries.

END OF SECTION

SECTION 03 30 00

CAST-IN-PLACE CONCRETE

PART 1 PART 1 GENERAL

1.1 SECTION INCLUDES

A. Concrete post footings.

B. Concrete reinforcement.

C. Joint devices associated with concrete work.

D. Concrete curing.

1.2 REFERENCE STANDARDS

A. ACI 211.1 - Standard Practice for Selecting Proportions for Normal, Heavyweight, and Mass Concrete; American Concrete Institute International; 1991 (Reapproved 2002).

B. ACI 301 - Specifications for Structural Concrete; American Concrete Institute International; 2010.

C. ACI 304R - Guide for Measuring, Mixing, Transporting, and Placing Concrete; American Concrete Institute International; 2000.

D. ACI 305R - Hot Weather Concreting; American Concrete Institute International; 2010.

E. ACI 306R - Cold Weather Concreting; American Concrete Institute International; 2010.

F. ACI 318 - Building Code Requirements for Structural Concrete and Commentary; American Concrete Institute International; 2011.

G. ASTM A615/A615M - Standard Specification for Deformed and Plain Carbon Billet-Steel Bars for Concrete Reinforcement; 2015.

H. ASTM A775/A775M - Standard Specification for Epoxy-Coated Steel Reinforcing Bars; 2007b (Reapproved 2014).

I. ASTM C39/C39M - Standard Test Method for Compressive Strength of Cylindrical Concrete Specimens; 2012a.

J. ASTM C94/C94M - Standard Specification for Ready-Mixed Concrete; 2013.

K. ASTM C143/C143M - Standard Test Method for Slump of Hydraulic-Cement Concrete; 2012.

L. ASTM C150/C150M - Standard Specification for Portland Cement; 2012.

M. ASTM C173/C173M - Standard Test Method for Air Content of Freshly Mixed Concrete by the Volumetric Method; 2012.

N. ASTM C260 - Standard Specification for Air-Entraining Admixtures for Concrete; 2010a.

O. ASTM C618 - Standard Specification for Coal Fly Ash and Raw or Calcined Natural Pozzolan for Use in Concrete; 2012.

P. ASTM C685/C685M - Standard Specification for Concrete Made by Volumetric Batching and Continuous Mixing; 2011.

Q. ASTM C1240 - Standard Specification for Silica Fume Used in Cementitious Mixtures; 2012.

1.3 SUBMITTALS

A. Product Data: Submit manufacturers' data on manufactured products showing compliance with specified requirements and installation instructions.

B. Mix Design: Submit proposed concrete mix design.

C. Project Record Documents: Accurately record actual locations of embedded utilities and components that will be concealed from view upon completion of concrete work.

1.4 QUALITY ASSURANCE

A. Perform work of this section in accordance with ACI 301 and ACI 318.
   1. Maintain one copy of each document on site.

B. Acquire cement from same source and aggregate from same source for entire project.

C. Follow recommendations of ACI 305R when concreting during hot weather.

D. Follow recommendations of ACI 306R when concreting during cold weather.

PART 2 PRODUCTS

2.1 FORMWORK

A. Form Materials: Contractor's choice of standard products with sufficient strength to withstand hydrostatic head without distortion in excess of permitted tolerances.
   1. Form Coating: Release agent that will not adversely affect concrete or interfere with application of coatings.
   2. Form Ties: Cone snap type that will leave no metal within 1-1/2 inches of concrete surface.

2.2 REINFORCEMENT

A. Reinforcing Steel: ASTM A615/A615M, Grade 60 (60,000 psi).
   1. Type: Deformed billet-steel bars.
   2. Finish: Epoxy coated in accordance with ASTM A775/A775M, unless otherwise indicated.

2.3 CONCRETE MATERIALS

A. Cement: ASTM C 150, Type I - Normal - Moderate Portland type.
   1. Acquire all cement for entire project from same source.

B. Fine and Coarse Aggregates: ASTM C 33 MDOT size 23 or 24 (fine) & MDOT Class A size 8. -A,B,C or D.

C. Fly Ash: ASTM C618, Class C or F.

D. Calcined Pozzolan: ASTM C618, Class N.

E. Silica Fume: ASTM C1240, proportioned in accordance with ACI 211.1.

F. Water: Clean and not detrimental to concrete.

2.4 ADMIXTURES

A. Do not use chemicals that will result in soluble chloride ions in excess of 0.1 percent by weight of cement.

B. Chemical Admixtures:
   1. Water Reducing Agent: ASTM C494, Type A; LUBRICON (American Admixtures). PSI NORMAL (Gifford-Hill), CHEMSTRONG A (Setcon Corporation), EUCON WR (The Euclid Chemical Company). POZZOLITH 122-N (Master Builders), or WRDA HYCOL (W.R. Grace).
   2. Air Entraining Agent: ASTM C260. AMEX 210 (American Admixtures), MICRO-AIR (Master Builders), AIR MIX (The Euclid Company), SEALTIGHT AIR ENTRAINING AGENT (W.R. Meadows). AIR TITE (Gifford-Hill), or DAREX AEA (W.R. Grace).
   3. Accelerator: EUCO ACCELGUARD 80 (The Euclid Chemical Co.), ADMIXTURE LL-880 (Master Builders), DARASET (W.R. Grace), or other approved equal chloride free, water-reducing, accelerating admixture.

2.5 ACCESSORY MATERIALS

A. Moisture-Retaining Cover: ASTM C 171; white polyethylene.
   1. Flood cure slab with water - 7 days.
   2. Do Not Apply Liquid Curing Compounds.
   3. Acceptable Products:

2.6 BONDING AND JOINTING PRODUCTS

A. Joint Filler: Non-extruding, resilient asphalt impregnated fiberboard or felt, 1/2 inch thick and 4 inches deep; tongue and groove profile.

B. Construction Joint Devices: Integral extruded plastic; formed to tongue and groove profile, with removable top strip exposing sealant trough, knockout holes spaced at 6 inches (150 mm).

C. Sealant and Primer: As specified in Section 07 9005.

2.7 CURING & SEALING MATERIALS

A. Densifier and Hardener: A water-based chemically reactive penetrating sealer and hardener that seals by densifying concrete so that water molecules cannot pass through but air and water vapor can, and allows concrete to achieve full compressive strength, minimizing surface crazing and eliminating dusting.
   1. Product: Ashford Formula, by Curecrete Inc.
   2. Work must be done by an applicator certified by the manufacturer. Certification credentials are required.

2.8 CONCRETE MIX DESIGN

A. Proportioning Normal Weight Concrete: Comply with ACI 211.1 recommendations.

B. Concrete Strength: Establish required average strength for each type of concrete on the basis of field experience or trial mixtures, as specified in ACI 301.
   1. For trial mixtures method, employ independent testing agency acceptable to Architect for preparing and reporting proposed mix designs.

C. Admixtures: Add acceptable admixtures as recommended in ACI 211.1 and at rates recommended or required by manufacturer.

D. Concrete foundation walls and footings, slabs on grade.
   1. Compressive Strength, per ASTM C 39 at 28 days: As Scheduled.
      a. Footings and Walls: 3000 psi.
      b. Interior and Exterior Slabs: 4000 psi.
   2. Fly Ash Content: Maximum 15 percent of cementitious materials by weight.
   3. Calcined Pozzolan Content: Maximum 10 percent of cementitious materials by weight.
   4. Silica Fume Content: Maximum 5 percent of cementitious materials by weight.
   5. Total Air Content: 6 percent, determined in accordance with ASTM C173/C173M.
   6. Maximum Slump: 4 inches.

2.9 MIXING

A. On Project Site: Mix in drum type batch mixer, complying with ASTM C685. Mix each batch not less than 1-1/2 minutes and not more than 5 minutes.

B. Transit Mixers: Comply with ASTM C94/C94M.

PART 3 EXECUTION

3.1 EXAMINATION

A. Verify lines, levels, and dimensions before proceeding with work of this section.

3.2 PREPARATION

A. Formwork: Comply with requirements of ACI 301. Design and fabricate forms to support all applied loads until concrete is cured, and for easy removal without damage to concrete.

B. Verify that forms are clean and free of rust before applying release agent.

C. Coordinate placement of embedded items with erection of concrete formwork and placement of form accessories.

3.3 PLACING CONCRETE

A. Place concrete in accordance with ACI 304R.

B. Place concrete for floor slabs in accordance with ACI 302.1R.

C. Maintain records of concrete placement. Record date, location, quantity, air temperature, and test samples taken.

D. Ensure reinforcement, inserts, and formed construction joint devices will not be disturbed during concrete placement.

3.4 CONCRETE FINISHING

A. Repair surface defects, including tie holes, immediately after removing formwork.

B. Unexposed Form Finish: Rub down or chip off fins or other raised areas 1/4 inch or more in height.

3.5 CURING AND PROTECTION

A. Comply with requirements of ACI 308R. Immediately after placement, protect concrete from premature drying, excessively hot or cold temperatures, and mechanical injury.

B. Maintain concrete with minimal moisture loss at relatively constant temperature for period necessary for hydration of cement and hardening of concrete.
   1. Normal concrete: Not less than 7 days.

C. Formed Surfaces: Cure by moist curing with forms in place for full curing period.

D. Surfaces Not in Contact with Forms:
   1. Initial Curing: Start as soon as free water has disappeared and before surface is dry. Keep continuously moist for not less than three days by water ponding, water-saturated sand, water-fog spray, or saturated burlap.
   2. Final Curing: Begin after initial curing but before surface is dry.

3.6 FIELD QUALITY CONTROL

A. An independent testing agency will perform field quality control tests.

B. Provide free access to concrete operations at project site and cooperate with appointed firm.

C. Submit proposed mix design of each class of concrete to inspection and testing firm for review prior to commencement of concrete operations.

D. Tests of concrete and concrete materials may be performed at any time to ensure conformance with specified requirements.

E. Compressive Strength Tests: ASTM C 39. For each test, mold and cure three concrete test cylinders. Obtain test samples for every 75 cu yd or less of each class of concrete placed each day.

F. Take one additional test cylinder during cold weather concreting, cured on job site under same conditions as concrete it represents.

G. Perform one slump test for each set of test cylinders taken, following procedures of ASTM C143/C143M.

3.7 DEFECTIVE CONCRETE

A. Test Results: The testing agency shall report test results in writing to Architect and Contractor within 24 hours of test.

B. Defective Concrete: Concrete not conforming to required lines, details, dimensions, tolerances or specified requirements.

C. Repair or replacement of defective concrete will be determined by the Architect. The cost of additional testing shall be borne by Contractor when defective concrete is identified.

D. Do not patch, fill, touch-up, repair, or replace exposed concrete except upon express direction of Architect for each individual area.

END OF SECTION

SECTION 06 10 00

ROUGH CARPENTRY

PART 1 GENERAL

1.1 SECTION INCLUDES

A. Structural dimension lumber framing and decking.

B. Preservative treated wood materials.

1.2 RELATED REQUIREMENTS

A. Section 03 3000 - Cast-in-Place Concrete.

B. Section 06 7300 - Composite Wood Decking - Alternate.

1.3 REFERENCE STANDARDS

A. ASTM A153/A153M - Standard Specification for Zinc Coating (Hot-Dip) on Iron and Steel Hardware; 2009.

B. AWPA U1 - Use Category System: User Specification for Treated Wood; American Wood Protection Association; 2012.

C. PS 20 - American Softwood Lumber Standard; National Institute of Standards and Technology, Department of Commerce; 2010.

D. SPIB (GR) - Grading Rules; Southern Pine Inspection Bureau, Inc.; 2002.

1.4 QUALITY ASSURANCE

A. Lumber: Comply with PS 20 and approved grading rules and inspection agencies.
   1. Acceptable Lumber Inspection Agencies: WWPA.

B. Preservative-Treated Wood: Provide lumber and plywood marked or stamped by an ALSC-accredited testing agency, certifying level and type of treatment in accordance with AWPA standards.

1.5 1DELIVERY, STORAGE, AND HANDLING

A. General: Cover wood products to protect against moisture. Support stacked products to prevent deformation and to allow air circulation.

1.6 WARRANTY

A. Correct defective Work within a one year period after Date of Substantial Completion.

PART 2 PRODUCTS

2.1 GENERAL REQUIREMENTS

A. Dimension Lumber: Comply with PS 20 and requirements of specified grading agencies.
   1. If no species is specified, provide any species graded by the agency specified; if no grading agency is specified, provide lumber graded by any grading agency meeting the specified requirements.
   2. Grading Agency: Any grading agency whose rules are approved by the Board of Review, American Lumber Standard Committee (www.alsc.org) and who provides grading service for the species and grade specified; provide lumber stamped with grade mark unless otherwise indicated.

B. Lumber fabricated from old growth timber is not permitted.

2.2 EXPOSED DIMENSION LUMBER

A. Grading Agency: Southern Pine Inspection Bureau, Inc. (SPIB).

B. Sizes: Nominal sizes as indicated on drawings.

C. Surfacing: S4S.

D. Sizes: Nominal sizes as indicated on drawings, S4S.

E. Moisture Content: S-dry or MC19.

F. Joist, Small Beam, and Decking Framing (2 by 6 through 2 by 12):
   1. Species: Douglas Fir.
   2. Grade: Select Structural.

2.3 TIMBERS

A. Grading Agency: Southern Pine Inspection Bureau, Inc. (SPIB).

B. Sizes: Nominal sizes as indicated on drawings, S4S.

C. Treated: Pressure treated posts to a retention of 0.40 lbs /cu ft. min.

D. Moisture Content: Kiln-dry (20 percent maximum).

E. Posts 3 inches and over in thickness:
   1. Species: Any allowed under referenced grading rules.
   2. Grade: No. 2.

2.4 ACCESSORIES

A. Fasteners and Anchors:
   1. Fasteners: Hot-dipped galvanized steel per ASTM A 153/A 153M.

B. Joist Hangers: Hot dipped galvanized steel.
   1. For contact with preservative treated wood in exposed locations, provide minimum G185 galvanizing per ASTM A653/A653M.

2.5 FACTORY WOOD TREATMENT

A. Treated Lumber and Plywood: Comply with requirements of AWPA U1 - Use Category System for wood treatments determined by use categories, expected service conditions, and specific applications.
   1. Preservative-Treated Wood: Provide lumber and plywood marked or stamped by an ALSC-accredited testing agency, certifying level and type of treatment in accordance with AWPA standards.

B. Preservative Treatment:
   1. Manufacturers:
      a. Arch Wood Protection, Inc: www.wolmanizedwood.com.
      b. Viance, LLC: www.treatedwood.com.
      c. Osmose, Inc: www.osmose.com.
      d. Substitutions: See Section 01 6000 - Product Requirements.

C. Preservative Pressure Treatment of Lumber Above Grade: AWPA Waterborne Alkaline Copper Quat using waterborne preservative to 0.25 lb/cu ft retention.
   1. Kiln dry lumber after treatment to maximum moisture content of 19 percent.
      a. Treat all lumber on project.

PART 3 EXECUTION

3.1 INSTALLATION - GENERAL

A. Select material sizes to minimize waste.

B. Reuse scrap to the greatest extent possible; clearly separate scrap for use on site as accessory components, including: shims, bracing, and blocking.

3.2 FRAMING INSTALLATION

A. Set structural members level, plumb, and true to line. Discard pieces with defects that would lower required strength or result in unacceptable appearance of exposed members.

B. Make provisions for temporary construction loads, and provide temporary bracing sufficient to maintain structure in true alignment and safe condition until completion of erection and installation of permanent bracing.

C. Install structural members full length without splices unless otherwise specifically detailed.

D. Comply with member sizes, spacing, and configurations indicated, and fastener size and spacing indicated, but not less than required by applicable codes.

3.3 SITE APPLIED WOOD TREATMENT

A. Apply preservative treatment compatible with factory applied treatment at site-sawn cuts, complying with manufacturer's instructions.

B. Allow preservative to dry prior to erecting members.

3.4 CLEANING

A. Waste Disposal:
   1. Comply with applicable regulations.
   2. Do not burn scrap on project site.
   3. Do not burn scraps that have been pressure treated.
   4. Do not send materials treated with pentachlorophenol, CCA, or ACA to co-generation facilities or “waste-to-energy” facilities.

B. Do not leave any wood, shavings, sawdust, etc. on the ground or buried in fill.

C. Prevent sawdust and wood shavings from entering the storm drainage system.

END OF SECTION

SECTION 06 73 00

COMPOSITE WOOD DECKING - ALTERNATE

PART 1 GENERAL

1.1 SUMMARY

A. Section Includes:
1. Composite wood decking.

1.2 REFERENCES

A. ASTM International (ASTM):
1. C177-04 - Standard Test Method for Steady-State Heat Flux Measurements and Thermal Transmission Properties by Means of the Guarded-Hot-Plate Apparatus.
2. D143-94(2000) - Standard Test Methods for Small Clear Specimens of Timber.
3. D198-05 - Standard Test Methods of Static Tests of Lumber in Structural Sizes.
4. D1037-06 - Standard Test Methods for Evaluating Properties of Wood-Base Fiber and Particle Panel Materials.
5. D1413-05 - Standard Test Method for Wood Preservatives by Laboratory Soil-Block Cultures.
6. D1761-06 - Standard Test Methods for Mechanical Fasteners in Wood.
7. D1929-96(2001) - Standard Test Method for Determining Ignition Temperature of Plastics.
8. D2047-04 - Standard Test Method for Static Coefficient of Friction of Polish-Coated Flooring Surfaces as Measured by the James Machine.
9. D2394-05 - Standard Methods for Simulated Service Testing of Wood and Wood-Base Finish Flooring.
10. D2395-06 - Standard Test Methods for Specific Gravity of Wood and Wood-Based Materials.
11. D4761-05 - Standard Test Methods for Mechanical Properties of Lumber and Wood-Base Structural Material.
12. E84-07 - Standard Test Method for Surface Burning Characteristics of Building Materials.
13. F1679-04 Standard Test Method for Using a Variable Incidence Tribometer (VIT).

B. American Wood Preservers Association (AWPA) E1-06 - Standard Method for Laboratory Evaluation to Determine Resistance to Subterranean Termites.

1.3 SUBMITTALS

A. Submittals for Review:
1. Product Data: Indicate sizes, profiles, surface finishes, and performance characteristics.
2. Samples: 12 inch long decking samples illustrating size, profile, color, and surface finish.

B. Closeout Submittals:
1. Maintenance Data: Manufacturer's instructions on care and cleaning of composite wood products.

1.4 DELIVERY, STORAGE AND HANDLING

A. Deliver, store, and handle composite wood in accordance with manufacturer's instructions.

B. Store composite wood level and flat, off ground or floor, with supports at each end and maximum 24 inches on center.

C. Do not stack composite wood over 12 feet high.

D. Cover composite wood with waterproof covering, vented to prevent moisture buildup.

1.5 WARRANTIES

A. Furnish manufacturer's 25 year warranty providing coverage against checking, splitting, splintering, rotting, structural damage from termites, and fungal decay of composite wood.

PART 2 PRODUCTS

2.1 MANUFACTURERS

A. Timbertech product: DockSider.

B. No substitutions.

2.2 MATERIALS

A. Composite Wood:
1. Composition: Reclaimed wood and plastic with integral coloring; free from toxic chemicals and preservatives.
2. Profiles:
a. Decking: Nominally 2 x 6 inches x maximum practical length. Actual dimensions: 1 1/4 x 5 1/2 inches.
b. Surface texture: VertiGrain; reversible woodgrain and smooth surfaces.
c. Color: Cedar.
d. Characteristics:
1) Abrasion resistance: 0.01 inch wear per 1000 revolutions, tested to ASTM D2394.
2) Hardness: 1124 pounds, tested to ASTM D143.
3) Self-ignition temperature: 743 degrees F, tested to ASTM D1929.
4) Flash ignition temperature: 698 degrees F, tested to ASTM D1929.

5) Flame spread rating: 80, tested to ASTM E84.
6) Water absorption, 24 hour immersion, tested to ASTM D1037:
   a) Sanded surface: 4.3 percent.
   b) Unsanded surface: 1.7 percent.
7) Thermal expansion coefficient, 36 inch long samples:
   a) Width: 35.2 x 10-6 to 42.7 x 10-6.
   b) Length: 16.1 x 10-6 to 19.2 x 10-6.
8) Fastener withdrawal, tested to ASTM D1761:
   a) Nail: 163 pounds per inch.
   b) Screw: 558 pounds per inch.
9) Static coefficient of friction:
   a) Dry: 0.53 to 0.55, tested to ASTM D2047.
   b) Dry: 0.59 to 0.70, tested to ASTM F1679.
   c) Wet: 0.70 to 0.75, tested to ASTM F1679.
10) Fungus resistance, white and brown rot: No decay, tested to ASTM D1413.
11) Termite resistance: 9.6 rating, tested to AWPA E-1.
12) Specific gravity: 0.91 to 0.95, tested to ASTM D2395.
13) Compression:
   a) Parallel: 1806 PSI ultimate, 550 PSI design, tested to ASTM D198.
   b) Perpendicular: 1944 PSI ultimate, 625 PSI design, tested to ASTM D143.
14) Tensile strength: 854 PSI ultimate, 250 PSI design, tested to ASTM D198.
15) Shear strength: 561 PSI ultimate, 200 PSI design, tested to ASTM D143.
16) Modulus of rupture: 1423 PSI ultimate, 250 PSI design, tested to ASTM D4761.
17) Modulus of elasticity: 175,000 PSI ultimate, 100,000 PSI design, tested to ASTM D4761.
18) Thermal conductivity: 1.57 BTU per inch per hour per square foot at 85 degrees F, tested to ATSM C177.

2.3 ACCESSORIES

A. Fasteners: Hot dip galvanized steel of length recommended by composite wood manufacturer for profile being fastened.

PART 3 EXECUTION

3.1 INSTALLATION

A. Install composite wood in accordance with manufacturer's instructions.

B. Cut, drill, and rout composite wood using carbide tipped blades.

C. Pre-drill fastener holes located closer than 1 inch from edges.

D. Cut ends square and true.

E. Do not use composite wood products as structural members.

F. Do not exceed maximum spans recommended by manufacturer.

G. Place boards perpendicular to supports.

H. Stagger end joints in adjacent rows at least one support.

I. Leave expansion spaces between abutting boards and between boards and adjacent construction:
   1. End gaps between boards: 1/8 inch at ambient temperatures of 60 degrees F and above and 3/16 inch at ambient temperatures below 60 degrees F.
   2. Side gaps between boards: 1/4 inch at ambient temperatures of 60 degrees F and above and 3/8 inch at ambient temperatures below 60 degrees F.
   3. Gaps between boards and adjacent construction: 1/4 inch at ambient temperatures of 60 degrees F and above and 1/2 inch at ambient temperatures below 60 degrees F.

J. Place boards to span three or more supports.

K. Fasten each board to each support with two fasteners.

3.2 CLEANING

A. Clean composite wood to remove stains:
   1. Mold, mildew, and berry and leaf stains: Clean surfaces with conventional deck wash containing detergent or sodium hypochlorite.
   2. Rust and ground-in dirt: Clean surfaces with cleaner containing oxalic or phosphoric acid.
   3. Oil and grease: Clean surfaces with detergent containing degreasing agent.

END OF SECTION

SECTION 08 71 00

HARDWARE

PART 1 GENERAL

1.1 SECTION INCLUDES

A. Hardware for aluminum doors, including but not limited to the following:.
   1. Hinges - Pivots
   2. Locksets and Cylinders
   3. Closers
   4. Thresholds, Gasketing and Door Bottoms
   5. Silencers
   6. Miscellaneous Trim and Accessories

1.2 RELATED REQUIREMENTS

A. Section 08 1116 - Aluminum Doors and Frames

1.3 REFERENCE STANDARDS

A. ANSI/ICC A117.1 - American National Standard for Accessible and Usable Buildings and Facilities; International Code Council; 2009.

B. DHI (LOCS) - Recommended Locations for Architectural Hardware for Standard Steel Doors and Frames; Door and Hardware Institute; 2004.

C. UL (BMD) - Building Materials Directory; Underwriters Laboratories Inc.; current edition.

1.4 ADMINISTRATIVE REQUIREMENTS

A. Coordinate the manufacture, fabrication, and installation of products that door hardware will be installed upon.

B. Furnish templates for door and frame preparation to manufacturers and fabricators of products requiring internal reinforcement for door hardware.

C. Convey City of South Haven's keying requirements to manufacturers.

D. Preinstallation Meeting: Convene a preinstallation meeting one week prior to commencing work of this section; require attendance by all affected installers.

E. Sequence installation to ensure utility connections are achieved in an orderly and expeditious manner.

1.5 SUBMITTALS

A. See Section 01 3000 - Administrative Requirements, for submittal procedures.

B. Product Data: Manufacturer's catalog literature for each type of hardware, marked to clearly show products to be furnished for this project.

C. Certification of compliance: Submit any information necessary to indicate compliance to any or all of theses specifications as required.

D. Contractor shall provide written verification that all hardware supplied for this project meets all the requirements of these specifications.

E. Templates for Finish Hardware items shall be sent to related door and frame suppliers within three (3) working days to approved schedule receipt.

F. Closer certification: The Contractor shall furnish a certificate executed by a representative of the door closure manufacturer that all closers have been inspected, adjusted and are operating as designed and have been installed in accordance with the manufacturer's instructions.

G. Manufacturer's Installation Instructions: Indicate special procedures, and perimeter conditions requiring special attention.

H. Project Record Documents: Record actual locations of concealed equipment, services, and conduit.

I. Maintenance Data: Include data on operating hardware, lubrication requirements, and inspection procedures related to preventative maintenance.

J. Keys: Deliver with identifying tags to City of South Haven by security shipment direct from hardware supplier.

1.6 QUALITY ASSURANCE

A. Manufacturer Qualifications: Company specializing in manufacturing the products specified in this section with minimum three years of documented experience.

B. Hardware Supplier Qualifications: Company specializing in supplying commercial and institutional door hardware with three years of experience approved by manufacturer.

1.7 DELIVERY, STORAGE, AND HANDLING

A. Package hardware items individually; label and identify each package with door opening code to match hardware schedule.

B. Pack each item complete with all necessary parts and fasteners.

C. Properly wrap and cushion each items to prevent scratches during delivery and storage.

D. Hardware supplier shall stockpile all items in advance to ensure their availability and make all necessary deliveries in a timely manner to guarantee orderly progress of the total work. Drop shipments from the manufacturer to the jobsite will not be allowed.

E. Contractor shall supply a separate secure, dry storage area sufficient in which to store, protect and organize finish hardware for this project.

F. Upon delivery all items are to be checked by the Contractor immediately acknowledging their arrival. Any shortages or discrepancies shall be noted at this time and the supplier notified immediately.

G. Hardware supplier shall assist in setting up jobsite hardware storage, organizing items to they may be located easily when needed for installation.

H. Any part of the Finish Hardware required by the frame or door manufacturer or other suppliers that is needed in order to produce doors or frames, such as cover boxes for electrical items included with hardware, shall be sent to those suppliers in a timely manner, so as not to interrupt job progress.

1.8 WARRANTY

A. See Section 01 7800 - Closeout Submittals, for additional warranty requirements.

B. All finish hardware, except door closers, shall be supplied with one (1) year warranty against defects in materials and workmanship commencing with their delivery to the jobsite.

C. Door closers shall carry a ten (10) year warranty.

PART 2 PRODUCTS

2.1 MANUFACTURERS

A. Allegion Brands; Ives, LCN, Schlage, Steelcraft, or Von Duprin: www.allegion.com/us.

B. Assa Abloy Brands; Corbin Russwin, Curries, McKinney, Norton, Sargent, or Yale: www.assaabloydss.com.

C. Hager Companies: www.hagerco.com.

2.2 DOOR HARDWARE - GENERAL

A. Provide hardware specified or required to make doors fully functional, compliant with applicable codes, and secure to the extent indicated.

B. Provide items of a single type of the same model by the same manufacturer.

C. Provide products that comply with the following:

1. Applicable provisions of federal, state, and local codes.
2. Products Requiring Electrical Connection: Listed and classified by UL as suitable for the purpose specified and indicated.

D. Function: Lock and latch function numbers and descriptions of manufactures series as as shown on the drawings.

E. Electrically Operated and/or Controlled Hardware: Provide all power supplies, power transfer hinges, relays, and interfaces required for proper operation; provide wiring between hardware and control components and to building power connection.

F. Finishes: Provide door hardware of the same finish unless otherwise indicated.
1. Primary Finish: Satin brass, clear coated, on bronze base metal, 606 (approx US4).
2. Finish Definitions: BHMA A156.18.
3. Exceptions:
a. Where base metal is specified to be different, provide finish that is an appearance equivalent according to BHMA A156.18.

2.3 HINGES

A. Fasteners:
1. Furnish with hardware all necessary screws, bolts and other fasteners of suitable size and type to anchor the hardware in position for a long life under hard use.
2. Furnish fastenings where necessary with expansion shields, toggle bolts and other anchors designated by the Architect according to the materials to which the hardware is to be applied and the recommendations of the hardware manufacturer. All closers and exit devices on labeled wood doors shall be thru-bolted, if required by the door manufacturer. All thresholds shall be fastened with machine screws and anchors.
3. Design of all fastenings shall harmonize with the hardware as to material and finish.

B. Environmental Concern for Packaging:
1. The hardware shipped to the jobsite shall be packaged in biodegradable packs; such as paper or cardboard boxes and wrapping. If non biodegradable packing is utilized, such as plastic, plastic bags, styrofoam, then the Contractor will be responsible for the disposal of the non biodegradable packing to a licensed or authorized collector for recycling of the non-biodegradable packing.

C. Hinges:
1. Finishes:
a. At wood and metal doors, hinges are to be plated to match adjacent hardware, or as called for.
2. Continuous hinges as listed hardware sets are manufactured by McKinney. Equals by PEMKO or ROTON are acceptable.

D. Locks and Lock Trim:
1. All locksets, latchsets and trim shall be of one manufacturer as hereafter listed.

2. Provide wrought box strike boxes and curved lip strikes with proper lip length to protect trim of the frame, but not to project more than 1/8" beyond frame trim or the inactive leaf of a pair of doors. All cylinder collars to be cast.
3. All functions shall be exactly as listed in the individual hardware sets with no exceptions.
4. Finish: as listed.

E. Keying:
1. All cylinders and keys shall be properly tagged to indicate their intended location and to enable the Owner, with a minimum of effort, to establish his key control system.

F. Door Closers:
1. All door closers shall be heavy duty, surface mounted, hydraulic type, with high strength cast case, full rack and pinion construction of heavy steel.
2. Size all closers in accordance with manufacturers recommendations at the building site.
3. All closers shall be the product of a single manufacturer.
4. The closers shall have adjustable spring power, which allows for closer sizing. Closers shall have separate tamper resistant, non critical regulating screw valves for closing speed, latching speed and backcheck control as a standard feature.
5. Acceptable Manufacturers:
   a. Sargent - 1430 Series
   b. LCN - 4040 Series
   c. Norton - 7500 Series

G. Thresholds and Gasketing:
1. Provide materials as listed in hardware sets. National Guard Products listed, equal products by PEMKO or REESE are acceptable. All thresholds must be in accordance with the A.D.A. and A.N.S.I. - A117.1.

H. Finishes:
1. The finish for all hardware in general shall be as called for in the hardware sets.

I. Door Silencers:
1. Furnish door silencers at all openings without gasketing. Provide two (2) at each pair of doors and three (3) for each single door.

2.4 OWNERS STOCK:

A. At the completion of the project, supply to the Owner the following items:
1. One (1) complete bitting list of key cuts.
2. One (1) set of instruction sheets for each item furnished.
3. One (1) each of any non-standard tool for installation of each item furnished.

2.5 HINGES

A. Hinges: Provide hinges on every swinging door.
1. Provide heavy-duty continuous hinges at exterior aluminum doors.

2. Provide hinges in the quantities indicated.

B. Manufacturers - Hinges:
1. McKinney
2. Pemko.
3. Roton.
4. Substitutions: See Section 01 6000 - Product Requirements.

2.6 CYLINDRICAL LOCKSETS

A. Locking Functions: As defined in BHMA A156.2, and as follows.
1. Always-Locked: F86, key required to lock, may not be left unlocked.

B. Manufacturers - Cylindrical Locksets:
1. Assa Abloy Brands; Corbin Russwin, Sargent, or Yale: www.assaabloydss.com.
2. Schlage, an Allegion brand: www.allegion.com/us.
3. Substitutions: See Section 01 6000 - Product Requirements.

2.7 CLOSERS

A. Manufacturers - Surface Mounted Closers:
1. LCN Closers
2. Norton
3. Sargent Mfg. Co..
4. Substitutions: See Section 01 6000 - Product Requirements.

2.8 GASKETING AND THRESHOLDS

A. Fasteners At Exterior Locations: Non-corroding.

B. Manufacturers - Gasketing and Thresholds:
1. Assa Abloy Brands; McKinney: www.assaabloydss.com.
2. Pemko Manufacturing Co.
3. National Guard Products, Inc..

2.9 FINISHES

A. The finish for all hardware in general shall be, dull chrome, US26D, BHMA #626.

B. Special care shall be taken to uniform the finish of all the various manufactured items.

C. The finish of all hardware shall match the finish of the locksets.

D. Door Closers: Surface-mounted door closers shall be BHMA #689 as specified.

PART 3 EXECUTION

3.1 EXAMINATION

A. Verify that doors and frames are ready to receive work and dimensions are as indicated on shop drawings and as instructed by the manufacturer.

B. Verify that electric power is available to any power operated devices and of the correct characteristics.

3.2 PRODUCT HANDLING

A. Packaging:
1. Furnish all finish hardware with each unit clearly marked or numbered in accordance with the hardware schedule.
2. Pack each item complete with all necessary pieces and fasteners.
3. Properly wrap and cushion each item to prevent scratches during delivery and storage,

B. Deliveries:
1. Stockpile all items sufficiently in advance to ensure their availability and make all necessary deliveries in a timely manner to ensure orderly progress of the total work. The hardware supplier shall mark each item of hardware for a specific door and item number, and package the materials to insure no damage in shipment to the job site. Drop shipments from the manufacturer to the job site will not be allowed.

3.3 INSTALLATION

A. Hardware shall be installed by experienced finish carpenters only. Install strictly according to the hardware manufacturer's installation instructions.

B. Check hardware against the reviewed hardware schedule upon delivery. Store the hardware to protect against loss and damage.

C. Install hardware in accordance with manufacturer's instructions and applicable codes.

D. Use templates provided by hardware item manufacturer.

E. Install hardware on fire-rated doors and frames in accordance with code and NFPA 80.

F. Mounting heights for hardware from finished floor to center line of hardware item.
1. For steel doors and frames: Comply with DHI "Recommended Locations for Architectural Hardware for Steel Doors and Frames."

G. Hardware shall be completely fitted before the final coat of paint or other finish is applied, and then removed for the final coat. Mortise and cutting shall be done neatly and evidence of cutting shall be concealed in the finished work. Permanently install the hardware after finishing operations are complete and dry. Protect knobs/levers from

scratching or other damage, adjust hardware and turn over to the Owner, in perfect operating condition. Tag keys and turn over to the Owner at the time of acceptance of the project. Upon completion of the installation, the Contractor shall as a condition of its acceptance, deliver to the Architect, a report stating that his inspection was made, that all recommended adjustments have been completed and that all Finish Hardware furnished under this section has been installed and is in optimum working condition. _____.

3.4 ADJUSTING

A. Adjust work under provisions of Section 01 7000.

B. Adjust hardware for smooth operation.

3.5 CLEANING

A. Clean adjacent surfaces soiled by hardware installation. Clean finished hardware per manufacturer's instructions after final adjustments has been made. Replace items that cannot be cleaned to manufacturer's level of finish quality at no additional cost.

3.6 PROTECTION

A. Protect finished Work under provisions of Section 01 7000.

B. Do not permit adjacent work to damage hardware or finish.

PART 4 HARDWARE SETS

4.1 SWING DOOR -- MAY NOT BE LEFT UNLOCKED - ALL DOORS IN PROJECT

A. HW-01: Always-Locked, Fire-Rated and Non-Fire-Rated where Closer is Desired:
1. Closer.
2. Lockset, Always-Locked - with lever handles.
3. Deadbolt.
4. Continuous hinge.
5. Threshold.
6. Gasket.
7. Sweep.

4.2 SWING DOOR -- ELECTRICAL ACCESS CONTROL - DOOR 101

A. HW-50: Entry Control, Electric Strike, Fail-Secure, Outswing, non-Fire-Rated:
1. fob reader, located where indicated.
2. Closer.
3. Lockset, Always-Locked.
4. Exit device, Rim, Always-Locked
5. Electric Strike, Fail-Secure.
6. Exterior pull.
7. Lock Guard.

END OF SECTION

SECTION 10 14 53

TRAFFIC SIGNAGE

PART 1 GENERAL

1.1 SUMMARY

A. Section Includes:
   1. Traffic signs, supports, and hardware.

B. Related Sections:
   1. Section 31 23 23.33 - Flowable Fill
   2. Section 32 13 13 - Concrete Paving

1.2 PRICE AND PAYMENT PROCEDURES - UNIT PRICES

A. Traffic Signs, Permanent:
   1. Basis of Measurement: Square Foot
   2. Basis of Payment: Includes signs, supports, and hardware.
   3. Basis of Application: This pay item will apply to permanent traffic signs.

B. Post, (type):
   1. Basis of Measurement: Each
   2. Bases of Payment: Includes sign post and hardware.
   3. Basis of Application: This pay item will apply to all sign posts for permanent traffic signs.

C. Post Hole through Concrete:
   1. Basis of Measurement: Each
   2. Basis of Payment: Includes core drilling and removing concrete pavement, backfill, release agent, and grout.
   3. Basis of Application: This pay item will apply where sign posts for permanent traffic signs are installed through concrete pavement or sidewalk.

D. Sign, Type _, Erect, Salv
   1. Basis of Measurement: Each
   2. Basis of Payment: Includes placing a salvaged sign on a new post including new hardware. The post shall be paid separately as “Post, (type)”.
   3. Basis of application: This pay item will apply where denoted on the plans for signs in salvageable condition.

1.3 REFERENCES

A. American Architectural Manufacturer’s Association:
   1. AAMA 2604 – Voluntary Specification, Performance Requirements and Test Procedures for High Performance Organic Coatings on Aluminum Extrusions and Panels

B. ASTM International:
1. ASTM A653 - Standard Specification for Steel Sheet, Zinc-Coated (Galvanized) or Zinc-Iron Alloy Coated (Galvannealed) by the Hot-Dip Process
2. ASTM A1011 - Standard Specification for Steel, Sheet and Strip, Hot-Rolled, Carbon, Structural, High-Strength Low-Alloy, High-Strength Low-Alloy with Improved Formability, and Ultra-High Strength
3. ASTM B209 - Standard Specification for Aluminum and Aluminum-Alloy Sheet and Plate
4. ASTM C1107 – Standard Specification for Packaged Dry, Hydraulic-Cement Grout (Nonshrink)
5. ASTM D4956 - Standard Specification for Retroreflective Sheeting for Traffic Control

C. Federal Highway Administration (FHWA):
1. Manual on Uniform Traffic Control Devices (MUTCD), Current Edition
2. Standard Highway Signs, Current Edition

D. Michigan Department of Transportation (MDOT):
1. MDOT 2012 Standard Specifications for Construction
2. Michigan Manual on Uniform Traffic Control Devices (MUTCD), Current Edition
3. MDOT Standard Highway Signs, Current Edition
4. MDOT Sign Support Standard Plans

1.4 SUBMITTALS

A. Section 01 33 00 - Submittal Procedures: Requirements for submittals.

B. Product Data: Submit pertinent data for sign panel material, retroreflective sheeting, sign posts, and support hardware.

C. Shop Drawings: Submit shop drawings showing dimensions and layouts of letters and symbols for each type of sign required for the Work.

1.5 QUALITY ASSURANCE

A. Qualifications:
1. Installers: Company specializing in performing work of this section with minimum three years documented experience.

B. Single Source Responsibility: Obtain permanent traffic signs, posts, mounting brackets, bolts, and all other required hardware from single source or manufacturer.

PART 2 - PRODUCTS

2.1 SIGNS

A. Manufacturers:

1. Lyle Signs, Inc.
2. Rathco Safety Supply, Inc.
3. Hall Signs, Inc.
4. Substitutions: Section 01 60 00 - Product Requirements: Product Substitution Procedures.

B. Panel Material: ASTM B209 aluminum sheet
1. Thickness: 0.080 inches.
2. Corners: Rounded per MDOT Standard Highway Signs.

C. Retroreflective Sheeting: ASTM D4956 Type IV or Type IX as determined according to MDOT 2012 Standard Specifications for Construction, Table 919-3.

D. Dimensions and Layout of Letters and Symbols:
1. Sign dimensions, symbols, letters, and reflectorization shall conform to the Michigan Manual on Uniform Traffic Control Devices and MDOT Standard Highway Signs.
2. Lettering of guide signs and street name signs shall be Clearview font.

2.2 SUPPORTS AND HARDWARE

A. Sign Posts:
1. U-Channel Posts: Standard weight, 3 pounds per foot hot-dip galvanized steel channel posts according to MDOT 2012 Standard Specifications for Construction, Section 919.04.A.
2. Square Tube Posts:
a. Products:
1) Allied Tube and Conduit, Telespar Sign Support Systems
2) Substitutions: Section 01 60 00 - Product Requirements.
b. Square Steel Tubing: ASTM A1011, Grade 50
c. Size: 2½ x 2½ inches square
d. Wall Thickness: 12 gauge (0.105 inches)
e. Profile: Perforated exterior with 7/16 inch diameter holes at 1 inch on center, all four sides.
f. Finish:
1) Zinc Coating: Hot dip galvanized per ASTM A653.
2) Powder Coating: After hot dip galvanizing, powder coat with electrostatically applied polyester/TGIC thermosetting resin meeting AAMA 2604.
3) Color: Black.
3. Breakaway Sign Post Coupler for square tube posts:
a. Products:
1) Designovations, Inc.: SNAP'nSAFE™ No. S250
2) Substitutions: Section 01 60 00 - Product Requirements: Product Substitution Procedures.

B. Mounting Hardware, including brackets, bolts, nuts, washers, and strapping:
1. MDOT 2012 Standard Specifications for Construction, Section 919.02.C.
2. Brackets for extruded street name signs:

a. Minimum length: 12 inches
b. U-channel bracket cap: Minimum overlap with U-channel post to allow for two bolts.

PART 3 - EXECUTION

3.1 EXAMINATION

A. Section 01 30 00 - Administrative Requirements: Verification of existing conditions before starting work.

B. Verify all work requiring trenching and rough grading is complete, prior to installing permanent traffic signs.

3.2 PREPARATION

A. Call MISS DIG at 1-800-482-7171 or 811 not less than three full working days before installing sign posts. Request underground utilities be located and marked within and surrounding construction areas.

B. Review sign plan, verify sign locations are in conformance with Michigan MUTCD.

C. Review sign sized to verify number of posts.
1. Required number of posts to support signs shall be in accordance with the MDOT Sign Support Typical Plans.

3.3 INSTALLATION

A. Install required number of posts.

B. Drive sign posts 42-inches minimum below grade.

C. Install posts plumb and facing direction of sign face in accordance with Schedules.

D. Install posts in paved areas through round opening in pavement.
1. Core drill and remove pavement
2. Install post
3. Fill void space with sand, level to two inched below pavement surface. Fill remaining void space with low strength (max 500 psi) flowable fill, flush with pavement surface.
4. Prior to filling void space, apply an approved release agent to cored pavement edges to prevent bonding.

E. Attach signs securely to sign posts with appropriate hardware.
1. Secure U-channel bracket cap for extruded street name signs to U-channel post with a minimum of 2 bolts, washers, and self-locking, nylon insert-type nuts.

3.4 SCHEDULES

A. Sign selection, arrangement, and location:
   1. Michigan MUTCD.

B. Orientation:
   1. Align signs at a 90 degree angle to the street, facing the direction of approaching traffic.
   2. Exception: No Parking signs shall be aligned at 30 to 45 degree angle to the street, unless mounted below other signs at 90 degree angle.

C. Mounting Height
   1. Michigan MUTCD.
   2. MDOT Sign Support Typical Plan Series 120-A.
   3. Minimum Clearance Above Ground:
      a. Standard: 7 feet.
      b. Double Signs: 6 feet minimum to lowest sign; 2 inch space between signs.
      c. Object Markers: 4 feet.

D. Offset to edge of sign:
   1. Face of Curb: 2 feet.
   2. Sidewalks: 1 foot.
   3. Pathways Open to Bicycle Travel: 2 feet.

END OF SECTION

SECTION 12 93 00

SITE FURNISHINGS

PART 1 GENERAL

1.1 SECTION INCLUDES

A. Bollards.

1.2 RELATED REQUIREMENTS

A. Section 03 3000 - Cast-in-Place Concrete: Bollard infill and underground encasement.

1.3 REFERENCE STANDARDS

A. ASTM A53/A53M - Standard Specification for Pipe, Steel, Black and Hot-Dipped, Zinc-Coated, Welded and Seamless; 2012.

1.4 SUBMITTALS

A. Product Data: Provide manufacturer's specifications and descriptive literature, installation instructions, and maintenance information.

B. Shop Drawings: Indicate plans for each unit or groups of units, elevations with model number, overall dimensions; construction, and anchorage details.

PART 2 PRODUCTS

2.1 BOLLARDS

A. Steel Pipe Bollards: Hollow galvanized steel pipe with plain shaft.
   1. Shape: Round.
   2. Diameter: 6 inches.
   3. Height Above Grade: 48 inches.
   4. Depth Below Grade: 24 inches.
   5. Cap: Formed steel dome.
   6. Guard/Bollard Cover: Polymer bollard guard with friction retainers
   7. Guard hieght: 54 inches
   8. Guard Inside Diameter: 6 7/8 inches.
   9. Guard color: Dark Green.
   10. Materials:
      a. Steel Pipe: ASTM A53/A53M, schedule 40.
      b. Factory Finish: Hot-dipped galvanized.
      c. Foundation sleeve: stainless steel
      d. Base flange and locking eyelet: material compatible with cover
   11. Products:

a. Ideal Shield: www.idealshield.com/products/bollard-covers/.
b. Substitutions: See Section 01 6000 - Product Requirements.

PART 3 EXECUTION

3.1 EXAMINATION

A. Verify that mounting surfaces, preinstalled anchor bolts, or other mounting devices are properly installed; and ready to receive site furnishing items.

3.2 INSTALLATION

A. Install site furnishings in accordance with approved shop drawings, and manufacturer's installation instructions.

B. See Section 03 3000 for bollard infill and underground encasement.

END OF SECTION

SECTION 26 32 13

Engine Generators

PART 1 GENERAL

1.1 SUMMARY

A. Provide, install, perform acceptance test and make operable the Emergency/Standby electric generating system, including all devices and equipment specified herein, shown on the drawings or required for service. Equipment shall be new, factory tested, delivered and installed.

B. Related Sections:
1. Section 26 36 23 – Automatic Transfer Switches
2. Section 33 32 19 – Public Utility Wastewater Pumping Stations

1.2 PRICE AND PAYMENT PROCEDURES - UNIT PRICES

A. Emergency Standby Generator, ___ kW:
1. Basis of Measurement: Each
2. Includes Furnishing and installing an emergency standby generator, connecting to an automatic transfer switch, setting up, testing and commissioning into service by a manufacturer's authorized representative.

1.3 REFERENCES

1. National Fire Protection Association (NFPA)
2. NFPA70 – National Electrical Code, including use in emergency standby systems

1.4 SYSTEM DESCRIPTION

A. The generator shall consist of a natural gas generator and controller, comprising a Generator Set furnishing emergency/standby power for critical equipment.

B. The system shall furnish appropriate wattage, voltage, and amperage capable of operating the equipment as shown in the plans and specifications.

1.5 PERFORMANCE REQUIREMENTS

A. Electrical Requirements: See Plans

1.6 SUBMITTALS

A. Section 01 33 00 - Submittal Procedures: Requirements for submittals.

B. Product Data: Submit prototype test certification and specification sheets showing all standard and optional accessories to be supplied, schematic wiring diagrams, dimension

drawings, and interconnection diagrams, identifying by terminal number, each required interconnection between the generator set and the transfer switch.

C. Test Reports:
   1. Production Tests
      a. Each transfer switch shall be tested under varying loads with all guards in place. Tests shall include:
      b. The complete transfer switch shall be subjected to a dielectric strength test per NEMA Standards ICS 1-109.05.
      c. The control panel shall meet or exceed the voltage surge withstand capability in accordance with ANSI C37.90a-2978 and the impulse withstand voltage test in accordance with NEMA Standard ICS 1-109.
      d. Upon request, arrangements to either witness this test will be made, or a certified test record will be sent prior to shipment.
   2. Site Tests: The manufacturer's local representative shall perform an installation check, start-up, and load test. The Engineer and Owners representatives shall be notified 48 hours in advance of the time and date of the site test.

D. Manufacturer's Installation Instructions: Submit installation instructions

E. Manufacturer's Certificate: Certify products meet or exceed specified requirements.

1.7 CLOSEOUT SUBMITTALS

A. Section 01 70 00 - Execution and Closeout Requirements}: Requirements for submittals.

B. Project Record Documents: Provide three (3) copies of as-built wiring diagram and Record actual locations of the transfer switch panel with respect to other lift station components and surrounding facilities.

C. Operation and Maintenance Data: Submit three (3) copies of O&M Data

D. Provide project record documents and O&M Data in three ringer binders which indicated the Owner, Project Name, Date, Contractor and related Subcontractors.

1.8 QUALIFICATIONS

A. Manufacturer: Company specializing in manufacturing products specified in this section with minimum ten (10) years documented experience.

B. Installer: Company specializing in performing work of this section with minimum five (5) years documented experience and approved by manufacturer.

1.9 PRE-INSTALLATION MEETINGS

A. Section 01 30 00 - Administrative: Pre-installation meeting.

B. Convene minimum one (1) week prior to commencing work of this section.

1.10 DELIVERY, STORAGE, AND HANDLING

A. Section 01 60 00 - Product Requirements: Requirements for transporting, handling, storing, and protecting products.

B. Accept equipment deliver at the location of assembly/installation. Inspect for damage.

C. Protect from damage.

1.11 FIELD MEASUREMENTS

A. Verify measurements and equipment fit prior to fabrication.

1.12 WARRANTY

A. A two-year comprehensive warranty for the manual transfer switch shall be included to guarantee against defective material and workmanship in accordance with the manufacturer's published warranty from the date of start-up.

B. The transfer switch manufacturer and its distributor shall maintain a 24-hour parts and service organization. This organization shall be regularly engaged in a maintenance contract program to perform preventative maintenance and service on equipment similar to that specified.

PART 2 PRODUCTS

2.1 Equipment

A. Manufacturers
1. Cummins Power Generation
2. Generac Power Systems
3. Kohler Power Systems
4. Substitutions: Section 01 60 00 - Product Requirements.

2.2 GENERATOR

A. The completed generator set shall be UL listed

B. The generator set shall meet standards set forth by the National Fire Protection Agency (NFPA) in NFPA 110, Level 1.

C. The generator shall comply with New Source Performance Standards (NSPS) established by the Environmental Protection Agency (EPA).

D. Self-ventilated and dripproof construction.

E. System shall be complete, functional, tested and inspected.

2.3 ALTERNATOR

A. The brushless, rotating-field alternator has broad range reconnectability.

B. NEMA MG1 ,IEEE, and ANSI standards compliance for temperature rise and motor starting.

C. Sustained short-circuit current of up to 300% of the rated current for up to 10 seconds.

D. Sustained short-circuit current enabling down stream circuit breakers to trip without collapsing the alternator field.

E. Vacuum-impregnated windings with fungus-resistant epoxy varnish for dependability and long life.

2.4 ENCLOSURE

A. Unit shall be house inside a hinged fully encased weatherproof fiberglass or steel enclosure with sound insulation. Generator shall include battery for starting the engine, battery charger, automatic transfer switch in NEMA 3R stainless steel enclosure.

B. Sound Attenuation: Level II Sound Attenuating Enclosure

2.5 CONTROLLER

A. The generator controller shall provide a digital display and menu control with measurements selectable in metric or English units.

B. Integrated hybrid voltage regulator with ±0.5% regulation

C. Built-in alternator thermal overload protection

D. NFPA 110 Level 1 capability

2.6 GAS SERVICE

A. Natural gas service supplied from the public utility and registered to the City of South Haven.

B. The Contractor shall be responsible for scheduling service installation and coordination with the local utility. The cost for installation of a new gas service shall be borne by the Contractor.

PART 3 EXECUTION – NOT USED

END OF SECTION

SECTION 26 36 23

AUTOMATIC TRANSFER SWITCHES

PART 1 GENERAL

1.1 Summary

A. This section includes the furnishing, installation, connection, and testing of programmed open-transition automatic transfer switches with bypass isolation, indicated as automatic transfer switches or ATS in this section.

B. Related Sections:
1. Section 26 32 13 – Engine Generators
2. Section 33 32 19 – Public Utility Wastewater Pumping Stations

1.2 PRICE AND PAYMENT PROCEDURES - UNIT PRICES

A. Emergency Standby Generator, ATS, ___ kW:
1. Basis of Measurement: Each
2. Includes Furnishing and installing an automatic transfer switch, connecting to generator and load, setting up, testing and commissioning into service by a manufacturer's authorized representative.

1.3 References

A. National Fire Protection Association (NFPA)
1. NFPA70 – National Electrical Code, including use in emergency standby systems

1.4 System Description

A. Switches monitor both power sources, signal generator set startup, automatically transfer power, and return the load to the primary power source once a stable utility is available.

B. Switches provide mechanical and electrical interlocking to prevent source-to-source connection through power or control wiring.

C. Switches shall include an integrated controller with pushbutton operation and LED indicators for operator feedback.

1.5 Performance Requirements

A. The transfer switch shall be rated in amperes for generator capable of supplying the appropriate wattage for each application.

1.6 Submittals

A. Section 01 33 00 - Submittal Procedures: Requirements for submittals.

B. Product Data: Submit prototype test certification and specification sheets showing all standard and optional accessories to be supplied, schematic wiring diagrams, dimension drawings, and interconnection diagrams, identifying by terminal number, each required interconnection between the generator set and the transfer switch.

C. Test Reports:
1. Production Tests
a. Each transfer switch shall be tested under varying loads with all guards in place. Tests shall include:
b. The complete transfer switch shall be subjected to a dielectric strength test per NEMA Standards ICS 1-109.05.
c. The control panel shall meet or exceed the voltage surge withstand capability in accordance with ANSI C37.90a-2978 and the impulse withstand voltage test in accordance with NEMA Standard ICS 1-109.
d. Upon request, arrangements to either witness this test will be made, or a certified test record will be sent prior to shipment.
2. Site Tests: The manufacturer’s local representative shall perform an installation check, start-up, and load test. The Engineer and Owners representatives shall be notified 48 hours in advance of the time and date of the site test.

D. Manufacturer's Installation Instructions: Submit installation instructions

E. Manufacturer's Certificate: Certify products meet or exceed specified requirements.

1.7 CLOSEOUT SUBMITTALS

A. Section 01 70 00 - Execution and Closeout Requirements}: Requirements for submittals.

B. Project Record Documents: Provide five (5) copies of as-built wiring diagram and Record actual locations of the transfer switch panel with respect to

C. Operation and Maintenance Data: Submit five (5) copies of O&M Data

D. Provide project record documents and O&M Data in three ringer binders which indicated the Owner, Project Name, Date, Contractor and related Subcontractors.

1.8 Qualifications

A. Manufacturer: Company specializing in manufacturing products specified in this section with minimum ten (10) years documented experience.

B. Installer: Company specializing in performing work of this section with minimum five (5) years documented experience and approved by manufacturer.

1.9 PRE-INSTALLATION MEETINGS

A. Section 01 30 00 - Administrative: Pre-installation meeting.

B. Convene minimum one (1) week prior to commencing work of this section.

1.10 DELIVERY, STORAGE, AND HANDLING

A. Section 01 60 00 - Product Requirements: Requirements for transporting, handling, storing, and protecting products.

B. Accept equipment deliver at the location of assembly/installation. Inspect for damage.

C. Protect from damage.

1.11 FIELD MEASUREMENTS

A. Verify measurements and equipment fit prior to fabrication.

1.12 Warranty

A. A two-year comprehensive warranty for the manual transfer switch shall be included to guarantee against defective material and workmanship in accordance with the manufacturer's published warranty from the date of start-up.

B. The transfer switch manufacturer and its distributor shall maintain a 24-hour parts and service organization. This organization shall be regularly engaged in a maintenance contract program to perform preventative maintenance and service on equipment similar to that specified.

PART 2 PRODUCTS

2.1 Equipment

A. Manufacturers:
1. Cummins Power Generation, OTEC Series.
2. Generac Power Systems, HTS Series.
3. Kohler Power Systems, KEP Series.
4. Substitutions: Section 01 60 00 - Product Requirements.

2.2 Enclosure

A. NEMA 3R or 4x

PART 3 EXECUTION – NOT USED

END OF SECTION

SECTION 31 10 00

SITE CLEARING AND REMOVALS

PART 1 GENERAL

1.1 SUMMARY

A. Section Includes:
1. Removing trees, shrubs, and other plant life.
2. Removing paving, curbs, sidewalks, and driveways.
3. Removing abandoned utilities.
4. Relocating mailboxes.

B. Related Sections:
1. Section 01 74 19 - Construction Waste Management and Disposal
2. Section 31 22 13 - Rough Grading
3. Section 31 23 33 - Trenching and Backfilling

1.2 PRICE AND PAYMENT PROCEDURES - UNIT PRICES

A. Tree, Rem., __ inch to __ inch:
1. Basis of Measurement: Each
   a. Engineer will measure diameter of each tree 4½ feet above the ground line at the base of the tree.
2. Basis of Payment: Includes protection of surrounding features, marking, cutting, clearing, grubbing, removing stump, root removal, backfill, loading and removing waste materials from site, and cleanup.

B. Clearing and Grubbing, misc.:
1. Basis of Measurement: Lump Sum
2. Basis of Payment: Includes tree removal for all trees smaller than the smallest separately itemized tree removal size. Includes removal of all plant life necessary for completion of the Work. Includes protection of surrounding features, cutting, clearing, grubbing, stump removal, root removal, backfill, loading and removing waste materials from site, and cleanup.
3. Basis of Application: This pay item will apply only if included on Bid Form. If not included on the Bid Form, all Work associated with this pay item will be considered incidental and will not be paid for separately.

C. HMA Surface, Rem.:
1. Basis of Measurement: Square Yard
2. Basis of Payment: Includes saw cutting, removing the pavement, loading, hauling, and disposal.
3. Basis of Application:
   a. This pay item will apply to the removal of HMA pavements that are less than or equal to 12 inches thick. Removal of HMA pavements greater than 12 inches thick will be paid for as Pavt., Rem.

b. Where concrete pavements are found below HMA pavements, the removal of the HMA pavement will be paid for as HMA Surface, Rem.

D. Pavt., Rem.:
1. Basis of Measurement: Square Yard
2. Basis of Payment: Includes saw cutting, removing the pavement, loading, hauling, and disposal.
3. Basis of Application:
   a. This pay item will apply to the removal of concrete pavements, concrete driveways, and concrete sidewalks greater than 6 inches thick.
   b. This pay item will apply to the removal of HMA pavements greater than 12 inches thick.
   c. Where concrete pavements are found below HMA pavements, the removal of the concrete pavement will be paid for as Pavt., Rem.

E. Sidewalk, Rem.:
1. Basis of Measurement: Square Yard
2. Basis of Payment: Includes saw cutting, demolishing, loading, hauling, and disposal.
3. Basis of Application: This pay item will apply to the removal of sidewalks and curb ramps less than or equal to 6 inches thick, along with any detectable warning surfaces and return curbs which are a part of curb ramps.

F. Curb, Rem.:
1. Basis of Measurement: Foot
2. Basis of Payment: Includes saw cutting, demolishing, loading, hauling, and disposal.
3. Basis of Application: This pay item will apply to the removal of concrete curb, except concrete curb which is removed in conjunction with removing concrete pavement. Concrete curb removed in conjunction with removing concrete pavement will be measured and paid for as Pavt., Rem.

G. Curb & Gutter, Rem.:
1. Basis of Measurement: Foot
2. Basis of Payment: Includes saw cutting, demolishing, loading, hauling, and disposal.
3. Basis of Application: This pay item will apply to the removal of concrete curb & gutter, except concrete curb & gutter which is removed in conjunction with removing concrete pavement. Concrete curb & gutter removed in conjunction with removing concrete pavement will be measured and paid for as Pavt., Rem.

H. Gutter, Rem.:
1. Basis of Measurement: Foot
2. Basis of Payment: Includes saw cutting, demolishing, loading, hauling, and disposal.
3. Basis of Application: This pay item will apply to the removal of concrete gutter, except concrete gutter which is removed in conjunction with removing concrete pavement. Concrete gutter removed in conjunction with removing concrete pavement will be measured and paid for as Pavt., Rem.

I. Utility Line, Rem., (type):
   1. Basis of Measurement: Foot
   2. Basis of Payment: Including trenching, removing the utility and all risers and appurtenances except for Utility Structures, backfill and compaction, loading, hauling, and disposal.
   3. Basis of Application: This pay item will apply to removal of underground utilities which require separate trenching. The removal of underground utilities located in the same trench as other Work will be considered incidental to the other items of Work.

J. Utility Str., Rem., (type):
   1. Basis of Measurement: Each
   2. Basis of Payment: Includes excavation, removing the utility structure, backfill, compaction, loading, hauling, and disposal.
   3. Basis of Application: This pay item will apply to the removal of all underground Utility Structures.

K. Fence, Rem.:
   1. Basis of Measurement: Foot
   2. Basis of Payment: Includes removing fence panels, rails, posts, and footings, backfilling post holes, and loading, hauling, and disposal.
   3. Basis of Application: This pay item will apply to all required fence removals.

L. Sign, Rem.:
   1. Basis of Measurement: Each
   2. Basis of Payment: Includes removing signs, supports, hardware, and foundations.
   3. Basis of Application: This pay item will apply to all traffic sign removals as indicated on plans.

M. Post, Mailbox:
   1. Basis of Measurement: Each
   2. Basis of Payment: Includes temporary relocation, reinstallation at original location, and new mailbox post.
   3. Basis of Application: This pay item will apply to each mailbox requiring relocation to maintain serviceability.

N. Guardrail, Rem.:
   1. Basis of Measurement: Foot
   2. Basis of Payment: Includes removing posts, rails, and accessories, backfilling post holes, loading, hauling, and disposal.
   3. Basis of Application: This pay item will apply to all guardrail removals as indicated on plans.

O. Fence, Rem.:
   1. Basis of Measurement: Foot
   2. Basis of Payment: Includes removing posts, fencing, and accessories, backfilling post holes, loading, hauling, and disposal.

3. Basis of Application: This pay item will apply to all fence removals as indicated on plans.

P. Pavement Line Marking, Rem.:
1. Basis of Measurement: Foot
2. Basis of Payment: Includes removing pavement markings.
3. Basis of Application: This pay item will apply to all pavement line marking removals where the underlying pavement is to remain.

Q. Pavement Legend Marking, Rem.:
1. Basis of Measurement: Each
2. Basis of Payment: Includes removing pavement markings.
3. Basis of Application: This pay item will apply to all pavement word, arrow, and other symbol marking removals where the underlying pavement is to remain.

R. Retaining Wall, Rem.
1. Basis of Measurement: Square Foot
2. Basis of Payment: Includes removing all retaining walls regardless of material. Includes removal of footings, backfilling, hauling and disposal.
3. Basis of Application: This pay item will apply to all retaining wall removals as indicated on plans.

S. Culv., Rem., _ inch to _ inch
1. Basis of Measurement: Each
2. Basis of Payment: Includes removing an existing culvert including end sections, accessories, backfilling, loading, hauling, and disposal.
3. Basis of Application: This pay item will apply to all culvert removals as indicated on the plans.

1.3 REFERENCES

A. Abbreviations and Acronyms:
1. HMA: Hot Mix Asphalt
2. Pavt.: Pavement

B. Definitions:
1. Composite Pavement: A pavement which is constructed of more than one paving material, most commonly found as HMA over concrete pavement.
2. Utility Structure: A structure having an inside diameter of at least 24 inches, which provides access to an underground utility. Common examples include catch basins, manholes, valve chambers, and vaults. Valve boxes, hydrants, cleanouts, and other utility risers less than 24 inches inside diameter shall not be considered Utility Structures.

C. References:
1. Michigan Department of Transportation (MDOT):
a. MDOT 2012 Standard Specifications for Construction

PART 2 PRODUCTS

2.1 MAILBOX POSTS

A. MDOT 2012 Standard Specifications for Construction, Section 912.

B. 4 inch square nominal dimension pressure treated wood lumber, with horizontal attachment to support mailbox.

PART 3 EXECUTION

3.1 EXAMINATION

A. Section 01 30 00 - Administrative Requirements: Verification of existing conditions before starting work.

B. Verify location of right of way and property lines.

C. Verify all necessary easements and grading permits are in place.

D. Verify extent of all scheduled removals compared to limits of other specified work. If additional removals appear necessary, request Engineer's approval prior to beginning removals.

3.2 PREPARATION

A. Call MISS DIG at 1-800-482-7171 or 811 not less than three full working days before performing any portion of the Work that involves any soil disturbance.
   1. Request underground utilities to be located and marked within and surrounding construction areas.

B. Mark all pavement removals with Engineer present, prior to saw cutting.
   1. Concrete curb, curb & gutter, gutter, sidewalk, and driveway removals shall terminate at an existing joint unless otherwise specified.

3.3 PROTECTION

A. Section 01 30 00 - Administrative Requirements

B. Locate and identify utilities indicated to remain; protect from damage.

C. Protect trees, plant growth, and features designated to remain.

D. Protect bench marks, survey control points, and existing structures from damage or displacement.

3.4 CLEARING

A. Clear areas required for access to site and execution of Work.

B. Remove trees shown on drawings to be removed. Remove stumps, main root ball, and root system to depth of 6 inches (or as needed for completion of the Work).

C. Remove stumps within 24 hours after tree removal is complete.

D. Do not remove trees which are not scheduled for removal, as indicated on drawings.

3.5 PAVEMENT SAWING

A. Saw cut pavement at limits of all pavement removals.

B. Neatly saw cut pavement in straight line parallel with or perpendicular to road centerline.

3.6 REMOVAL

A. Remove from site all paving, curbs, driveways, fences, and sidewalks where required.

B. Remove debris, rock, and extracted plant life from site.

C. Perform trenching in accordance with Section 31 23 33.

D. Remove abandoned utilities. Indicate removal termination point for underground utilities on Record Documents.

E. Backfill trenches and excavations in accordance with Section 31 23 33.

F. Continuously clean-up and remove waste materials from site. Do not allow materials to accumulate on site.

G. Do not burn or bury materials on site. Leave site in clean condition.

H. Remove pavement markings that conflict with proposed temporary or permanent pavement markings. Immediately clean up any debris generated. Obtain Engineer's approval for one of the following removal methods and minimize damage to surface texture of the pavement during removal:
1. Sandblasting using air or water.
2. Shot blasting.
3. High-pressure water.
4. Steam or superheated water.
5. Mechanical grinders, sanders, scrapers, scarifiers, and wire brushes.

3.7 PROTECTION OF PAVEMENT EDGES

A. After completion of removals, protect exposed edges of remaining pavement until subsequent paving is completed.

B. Removed damaged edges in accordance with paragraphs 3.5 and 3.6 above without additional compensation.

3.8 MAILBOXES

A. Remove, salvage, and erect for temporary service, all mailboxes which would otherwise become inaccessible during construction. Notify property owner not less than 24 hours prior to performing this Work.

B. Install a new mailbox post at the permanent location according to Michigan Department of Transportation Standard Plan R-74 Series.

C. Install original mailbox on new post.

D. Contact property owner and offer to donate original support. If owner declines, dispose of original support.

3.9 STANDARD DRAWINGS

A. MDOT R-74 Series: Bumper & Parking Rails, and Misc. Wood Posts

END OF SECTION

SECTION 31 22 13

ROUGH GRADING

PART 1 GENERAL

1.1 SUMMARY

A. Section Includes:
1. Excavating topsoil.
2. Excavating subsoil.
3. Cutting, grading, filling, rough contouring, compacting.

B. Related Sections:
1. Section 31 10 00 - Site Clearing and Removals
2. Section 31 23 33 - Trenching and Backfilling
3. Section 32 91 19 - Landscape Grading

1.2 PRICE AND PAYMENT PROCEDURES - UNIT PRICES

A. Roadway Grading:
1. Basis of Measurement: Station
2. Basis of Payment:
   a. Includes all excavation, filling, and surplus material removal.
   b. Includes removing existing topsoil and undercutting for topsoil respreading.
   c. Includes all stockpiling, moving, loading, hauling, and disposal.
   d. Includes removing all surplus material and material not conforming to specifications.
   e. Including supplying all fill material.
   f. Includes Work within entire project limits.
   g. Includes all miscellaneous clearing and removals not separately identified in other contract pay items.
   h. If provided in the Bidding Documents, any estimated quantity of excavation and filling is provided for the bidder's convenience only. Bidders are responsible for estimating and any variation from estimated quantity will not result an adjusted payment.
3. Basis of Application: This pay item will apply when included in the Bid Form. This pay item will generally be used for road reconstruction projects with minor grade changes.

B. Site Grading:
1. Basis of Measurement: Lump Sum
2. Basis of Payment:
   a. Includes all excavation, filling, and surplus material removal.
   b. Includes removing existing topsoil and undercutting for topsoil respreading.
   c. Includes all stockpiling, moving, loading, hauling, and disposal.

d. Includes spreading salvaged topsoil where called for on plans.
e. Includes removing all surplus material and material not conforming to specifications.
f. Including supplying all fill material.
g. Includes Work within entire project limits.
h. Includes all miscellaneous clearing and removals not separately identified in the contract prices.
i. If provided in the Bidding Documents, any estimated quantity of excavation and filling is provided for the bidder's convenience only. Bidders are responsible for estimating and any variation from estimated quantity will not result an adjusted payment.

3. Basis of Application: This pay item will apply when included in the Bid Form. This pay item will generally be used for earthwork on sites other than road construction projects.

C. Excavation:
1. Basis of Measurement: Cubic Yard
2. Basis of Payment:
a. Includes excavating to the required subgrade.
b. Includes moving, placing and compacting excavated material on site to the required grade, and removing surplus material from site.
3. Basis of Application: This pay item will apply when pay items "Roadway Grading" or "Site Grading" are not included in the Bid Form.

D. Fill:
1. Basis of Measurement: Cubic Yard
2. Basis of Payment:
a. Includes supplying fill material to the site.
b. Includes moving, placing and compacting fill material to the required grade.
3. Basis of Application: This pay item will apply when pay items "Roadway Grading" or "Site Grading" are not included in the Bid Form

E. Embankement, CIP
1. Basis of Measurement: Cubic Yard
2. Basis of Payment:
a. Includes supplying fill material to the site.
b. Includes moving, placing and compacting fill material to the required grade.
3. Basis of Application: This pay item shall be used at locations requiring additional fill beyond the typical requirements of "Roadway Grading" or "Site Grading" as defined by the Engineer. This item will only be paid if specifically denoted, otherwise fill required to bring a location to grade will be deemed incidental to other items of work.

F. Subgrade Undercutting, Type __
1. Basis of Measurement: Cubic Yard
2. Basis of Payment:

a. Includes removing material below typical trenching limits to dispose of unsuitable soils and replacement with suitable fill. Includes all excavation, disposal and compaction of new fill materials.

3. Basis of Application: This pay item shall be used at the discretion of the Engineer to ensure proper subgrade conditions for pipe installation.

1.3 REFERENCES

A. ASTM International:
1. ASTM C117 - Standard Test Method for Materials Finer than 75-µm (No. 200) Sieve in Mineral Aggregates by Washing
2. ASTM C136 - Standard Test Method for Sieve Analysis of Fine and Coarse Aggregates
3. ASTM D1557 - Standard Test Methods for Laboratory Compaction Characteristics of Soil Using Modified Effort (56,000 ft-lbf/ft^3)
4. ASTM D2922 - Standard Test Method for Density of Soil and Soil-Aggregate in Place by Nuclear Methods (Shallow Depth)
5. ASTM D3017 - Standard Test Method for Water Content of Soil and Rock in Place by Nuclear Methods (Shallow Depth)

B. Michigan Department of Transportation (MDOT):
1. MDOT 2012 Standard Specifications for Construction
2. MDOT Density Testing and Inspection Manual, Current Edition

1.4 SUBMITTALS

A. Section 01 33 00 - Submittal Procedures: Requirements for submittals.

B. Materials Source: Submit source location and names of material suppliers.

C. Manufacturer's Certificate: Certify materials meet or exceed specified requirements.

1.5 QUALITY ASSURANCE

A. Preconstruction Testing:
1. Section 01 40 00 - Quality Requirements: Testing and Inspections by Owner.
2. Notify Engineer minimum two weeks prior to scheduled delivery of fill material.
3. Allow Owner’s representative access to fill material source for sampling and testing.
4. Confirm test results indicate conformance with specifications prior to delivery to site.
5. Owner reserves the right to collect and test additional samples of fill material after delivery to site.

PART 2 PRODUCTS

2.1 MATERIALS

A. Fill: MDOT 2012 Standard Specifications for Construction, Section 902.07.
   1. Class II Granular Material per Table 902-3.

B. Suitable on site material may be utilized as fill with approval of Engineer.

PART 3 EXECUTION

3.1 EXAMINATION

A. Section 01 30 00 - Administrative Requirements: Verification of existing conditions before starting work.

B. Verify survey bench mark and intended elevations for the Work are as indicated on Drawings.

3.2 PREPARATION

A. Call MISS DIG at 1-800-482-7171 or 811 not less than three full working days before performing any portion of the Work that involves any soil disturbance.
   1. Request underground utilities to be located and marked within and surrounding construction areas.
   2. Verify all utility companies have responded before commencing Work.

B. Identify required lines, levels, contours, and datum.

C. Protect utilities indicated to remain from damage.

D. Protect plant life, lawns, and other features remaining as portion of final landscaping.

E. Protect bench marks, survey control points, existing structures, fences, sidewalks, paving, and curbs from excavating equipment and vehicular traffic.

3.3 TOPSOIL EXCAVATION

A. Excavate topsoil from areas to be further excavated, relandscaped, or regraded, without mixing with foreign materials for use in finish grading.

B. Stockpile in area designated on site and protect from erosion.

C. Remove excess topsoil not intended for reuse from site, as directed by Engineer.

3.4 SUBSOIL EXCAVATION

A. Excavate subsoil from areas to be further excavated, relandscaped, or regraded.

B. Excavate and process wet material to obtain optimum moisture content.

C. When excavating through roots, perform Work by hand and cut roots with sharp axe.

D. Stockpile excavated material in area designated on site.

E. Benching Slopes: Horizontally bench existing slopes greater than 1: 4 to key placed fill material to slope to provide firm bearing.

F. Stability: Replace damaged or displaced subsoil as specified for fill.

3.5 FILLING

A. Place fill to contours and elevations with specified materials.

B. Place fill in continuous layers as follows:
1. Maximum 12 inches compacted depth.
2. Compact uniformly to minimum 95 percent of maximum density as determined in accordance with ASTM D1557.

C. Maintain optimum moisture content of fill materials to attain required compaction density.

D. Make grade changes gradual. Blend slope into level areas.

E. Repair or replace items indicated to remain which are damaged by excavation or filling.

3.6 TOLERANCES

A. Top Surface of Subgrade: Plus or minus 0.10 foot from required elevation.

3.7 FIELD QUALITY CONTROL

A. Section 01 40 00 - Quality Requirements: Testing and Inspections by Owner.

B. Geotechnical Tests:
1. Provide Owner's representative with samples or access to stockpiles upon request.
2. Owner's representative will perform laboratory testing of fill material to determine gradation in accordance with ASTM C117 and ASTM C136.
3. Owner's representative will perform testing to determine maximum density of fill material in accordance with ASTM D1557 or Michigan Cone Test.
4. Owner's representative will perform in place compaction tests of fill material in accordance with the following:
a. Density Tests: ASTM D2922.
b. Moisture Tests: ASTM D3017.
5. Frequency of Tests: As determined by Engineer.

C. When tests indicate Work does not meet specified requirements, remove Work, replace and retest.

3.8 PROTECTION OF FINISHED WORK

A. Reshape and recompact fills subjected to vehicular traffic during construction.

END OF SECTION

SECTION 31 23 19

DEWATERING

PART 1 GENERAL

1.1 SUMMARY

A. Section Includes:
1. Dewatering system.
2. Surface water control system.
3. Monitoring wells.
4. System operation and maintenance.
5. Water disposal.

B. Related Sections:
1. Section 31 22 13 - Rough Grading
2. Section 31 23 23.33 - Flowable Fill
3. Section 31 23 33 - Trenching and Backfilling
4. Section 31 25 00 - Erosion and Sedimentation Controls

1.2 PRICE AND PAYMENT PROCEDURES - UNIT PRICES

A. Dewatering System:
1. Basis of Measurement: Lump Sum.
2. Basis of Payment: Includes all material, equipment and labor required to install, operate, maintain, and remove a dewatering system that removes groundwater from beyond the excavation limits. All work within the excavation limits will be considered included in other pay items.
3. Basis of Application: This pay item will apply only if included on Bid Form. If not included on the Bid Form, all Work associated with this pay item will be considered incidental and will not be paid for separately.

1.3 DEFINITIONS

A. Dewatering includes the following:
1. Lowering of ground water table and intercepting horizontal water seepage to prevent ground water from entering excavations and trenches.
2. Reducing piezometric pressure within strata to prevent failure or heaving of excavations and trenches.
3. Disposing of removed water.

B. Surface Water Control: Removal of surface water within open excavations.

1.4 QUALITY ASSURANCE

A. Regulatory Requirements:
1. Comply with authorities having jurisdiction for the following:

a. Drilling and abandoning of wells used for dewatering systems.
b. Water discharge and disposal from pumping operations.

2. Obtain permit from EPA under National Pollutant Discharge Elimination System (NPDES), for storm water discharge from construction sites.

B. Qualifications of Installer:
1. Company specializing in performing work of this section and responsible for design, operation, and maintenance of dewatering system.
2. Assume sole responsibility for dewatering and surface water control systems and for loss or damage resulting from partial or complete failure of protective measures and settlement or resultant damage caused by ground water control operations.

C. Sequencing:
1. Sequence work to obtain required permits before start of dewatering operations.

D. Coordination:
1. Section 01 30 00 - Administrative Requirements: Requirements for coordination.
2. Coordinate work to permit all construction operations to be completed on dry, stable substrate.

PART 2 PRODUCTS

2.1 SYSTEM DESCRIPTION

A. Provide dewatering and surface water control systems to permit Work to be completed on dry and stable subgrade.

B. Provide monitoring wells and monitoring equipment where needed to obtain meaningful observations of conditions affecting excavation, adjacent structures, and adjacent water wells.

C. Furnish standby equipment stored at Project site and ready for immediate use upon failure of dewatering equipment, in circumstances when failure of dewatering equipment poses immediate danger or threat to safety of persons or integrity of the Work.

2.2 PERFORMANCE REQUIREMENTS

A. Design dewatering systems to:
1. Lower water table within areas of excavation to permit Work to be completed on dry and stable subgrade.
2. Relieve hydrostatic pressures in confined water bearing strata below excavation to eliminate risk of uplift or other instability of excavation.
3. Prevent damage to adjacent properties, buildings, structures, utilities, and facilities from construction operations.
4. Prevent loss of fines, quick condition, or softening of foundation subgrade.
5. Maintain stability of sides and bottoms of excavations and trenches.

B. Design surface water control systems to:
   1. Collect and remove surface water and seepage entering excavation.

2.3 DEWATERING EQUIPMENT

A. Select dewatering equipment to meet specified performance requirements.

B. Dewatering pumps operating outside of time restrictions for performing Work shall be driven by electric motors. Dewatering pumps operating outside of time restrictions for performing Work shall not be powered by gasoline engines, diesel engines, or generators. Power source shall be batteries or temporary electric service provided in accordance with Section 01 50 00.

PART 3 EXECUTION

3.1 EXAMINATION

A. Section 01 30 00 - Administrative Requirements: Verification of existing conditions before starting work.

B. Conduct additional borings and investigations to supplement subsurface investigations identified in Section 00 31 32 as required to complete dewatering system design.

C. Call MISS DIG at 1-800-482-7171 or 811 not less than three full working days before performing any portion of the Work that involves any soil disturbance.
   1. Request underground utilities to be located and marked within and surrounding construction areas.
   2. Verify all utility companies have responded before commencing Work.

D. Notify Engineer prior to commencing dewatering.

3.2 PREPARATION

A. Protect existing adjacent buildings, structures, and improvements from damage caused by dewatering operations.

3.3 MONITORING WELLS

A. Install monitoring wells at locations recommended by installer.

B. Test each monitoring well point to verify installation is performing properly.

C. Install piezometers, calibrate, and test for proper operation.

D. Protect monitoring well standpipes from damage by construction operations.

E. Maintain accessibility to monitoring wells continuously during construction operations.

F. Maintain monitoring wells until groundwater is allowed to return to normal level.

3.4 DEWATERING SYSTEM

A. Install dewatering system in accordance with Drawings or approved design.

B. Locate system components to allow continuous dewatering operations without interfering with installation of permanent Work and existing public rights-of-way, sidewalks, and adjacent buildings, structures, and improvements.

C. Install components in accordance with manufacturer's instructions.

3.5 SURFACE WATER CONTROL SYSTEM

A. Provide ditches, berms, and other devices to divert and drain surface water from excavation area as specified in Section 31 25 00.

B. Divert surface water and seepage water within excavation areas into sumps and pump water into approved location.

C. Control and remove unanticipated water seepage into excavation.

3.6 SYSTEM OPERATION AND MAINTENANCE

A. Operate dewatering system continuously until backfilling is complete.

B. Provide 24-hour supervision of dewatering system by personnel skilled in operation, maintenance, and replacement of system components.

C. Conduct daily observation of dewatering system and monitoring system. Make required repairs and perform scheduled maintenance.

D. When dewatering system cannot control water within excavation, notify Engineer and stop excavation work.
   1. Supplement or modify dewatering system and provide other remedial measures to control water within excavation.
   2. Demonstrate dewatering system operation complies with performance requirements before resuming excavation operations.

E. Modify dewatering and surface water control systems when operation causes or threatens to cause damage to new construction, existing site improvements, adjacent property, or adjacent water wells.

F. Correct unanticipated pressure conditions affecting dewatering system performance.

G. Do not discontinue dewatering operations without Engineer's approval.

3.7 WATER DISPOSAL

A. Discharge water only into an approved location.

B. Discharge groundwater into storm sewer system, drainage channels, or settling basins as required. Erosion controls at the discharge may be required in addition to Section 31 25 00.

C. Discharge wastewater from excavations involving an existing sanitary sewer into sanitary sewer. Location of discharge to sanitary sewer must be approved by the Engineer. Provide notification to wastewater treatment plant supervisor.

D. Pumping rates shall not exceed 50% of the capacity of the receiving sewer.

E. Temporarily suspend pumping to sewers if necessary to avoid or relieve backups.

F. In the event of groundwater contamination in the area of dewatering, additional disposal requirements may be required. Contractor shall confirm with Engineer if contaminated groundwater may be discharged into the sanitary system or alternative discharge methods are required.

3.8 SYSTEM REMOVAL

A. Remove dewatering and surface water control systems after dewatering operations are discontinued.

B. Remove piezometers and monitoring wells.

C. Cut off and cap abandoned wells minimum 36 inches below completed subgrade elevation.

D. Fill abandoned piping with flowable fill.

E. Repair damage caused by dewatering and surface water control systems or resulting from failure of systems to protect property.

END OF SECTION

SECTION 31 23 23.33

FLOWABLE FILL

PART 1 GENERAL

1.1 SUMMARY

A. Section Includes:
1. Flowable fill for:
a. Structure backfill.
b. Utility bedding.
c. Utility backfill.
d. Filling abandoned utilities.

B. Related Sections:
1. Section 31 10 00 - Site Clearing and Removals
2. Section 31 22 13 - Rough Grading
3. Section 31 23 19 - Dewatering
4. Section 31 23 33 - Trenching and Backfilling
5. Section 31 25 00 - Erosion and Sedimentation Controls

1.2 PRICE AND PAYMENT PROCEDURES - UNIT PRICES

A. Fill Abandoned Utility, __ inch:
1. Basis of Measurement: Foot
2. Basis of Payment: Includes furnishing flowable fill and installing where required.

B. Flowable Fill:
1. Basis of Measurement: Cubic Yard
2. Basis of Payment: Includes furnishing flowable fill and installing where required.

1.3 REFERENCES

A. ASTM International:
1. ASTM C33 - Standard Specification for Concrete Aggregates
2. ASTM C94/C94M - Standard Specification for Ready-Mixed Concrete
3. ASTM C150 - Standard Specification for Portland Cement
4. ASTM C260 - Standard Specification for Air-Entraining Admixtures for Concrete
5. ASTM C494/C494M - Standard Specification for Chemical Admixtures for Concrete
6. ASTM C618 - Standard Specification for Coal Fly Ash and Raw or Calcined Natural Pozzolan for Use as a Mineral Admixture in Concrete
7. ASTM C1017/C1017M - Standard Specification for Chemical Admixtures for Use in Producing Flowing Concrete

1.4 DEFINITIONS

A. Utility: Any buried pipe, duct, conduit, manhole, tank or cable.

B. Excavatable Flowable Fill: Lean cement concrete fill used where future excavation may be required such as fill for utility trenches, bridge abutments, and culverts.

C. Non-Excavatable Flowable Fill: Lean cement concrete fill used where future excavation is not anticipated such as fill below structure foundations and filling abandoned utilities.

1.5 SUBMITTALS

A. Section 01 33 00 - Submittal Procedures: Requirements for submittals.

B. Materials Source: Submit names of flowable fill material suppliers.

C. Manufacturer's Certificate: Certify materials meet or exceed specified requirements.

D. Mix Design:
1. Submit flowable fill mix design for each specified strength. Submit separate mix designs when admixtures are required for the following:
a. Flowable fill work during hot and cold weather.
b. Air entrained flowable fill work.
2. Identify design mix ingredients, proportions, properties, admixtures, and tests.
3. Submit test results to certify flowable fill mix design properties meet or exceed specified requirements.

E. Delivery Tickets: Submit duplicate delivery tickets indicating actual materials delivered to Project site.

1.6 QUALITY ASSURANCE

A. Qualifications:
1. Manufacturers: Company specializing in manufacturing products specified in this section.

1.7 ENVIRONMENTAL REQUIREMENTS

A. Section 01 60 00 - Product Requirements: Environmental conditions affecting products on site.

B. Do not install flowable fill during inclement weather or when ambient temperature is less than 40 degrees F.

1.8 FIELD MEASUREMENTS

A. Verify field measurements before installing flowable fill to establish quantities required to complete the Work. If any variation from planned quantity, notify Engineer prior to

installation. Any deviation from planned quantity will not be considered for additional payment without prior notification.

PART 2 PRODUCTS

2.1 FLOWABLE FILL

A. Flowable Fill: Excavatable type or non-excavatable type as specified

2.2 MATERIALS

A. Portland Cement: ASTM C150 Type I or Type II.

B. Fine Aggregates: ASTM C33.

C. Water: Clean and not detrimental to concrete.

2.3 ADMIXTURES

A. Air Entrainment: ASTM C260.

B. Chemical Admixture: ASTM C494/C494M.

C. Fly Ash: ASTM C618 Class C or F obtained from residue of electric generating plant using ground or powdered coal.

D. Plasticizing: ASTM C1017/C1017M .

2.4 MIXES

A. Mix and deliver flowable fill in accordance with ASTM C94/C94M, Option C.

B. Flowable Fill Design Mix:

ITEM	EXCAVATABLE	NON-EXCAVATABLE
Cement Content	75-100 pcf	100-150 pcf
Fly Ash Content	None	150-600 pcf
Water Content	As needed for flowability	As needed for flowability
Air Entrainment	5-35 percent	5-15 percent
28 Day Compressive Strength	Maximum 100 psi.	Minimum 125 psi
Unit Mass (Wet)	80-110 pcf	100-125 pcf
Temperature, Minimum at point of delivery	50 degrees F	50 degrees F

C. Provide water content in design mix to produce self-leveling, flowable fill material at time of placement.

D. Design mix air entrainment and unit mass are for laboratory design mix and source quality control only.

PART 3 EXECUTION

3.1 EXAMINATION

A. Section 01 30 00 - Administrative Requirements: Verification of existing conditions before starting work.

B. Verify excavation or trenching is complete.

C. Verify utility installation is complete and tested before placing flowable fill.

D. Verify excavation is dry.

3.2 PREPARATION

A. Support and restrain utilities to prevent movement and flotation during installation of flowable fill.

B. Protect structures and utilities from damage caused by hydraulic pressure of flowable fill before fill hardens.

C. Protect utilities to prevent intrusion of flowable fill.

3.3 INSTALLATION - FILL, BEDDING, AND BACKFILL

A. Place flowable fill by chute, pumping or other methods approved by Engineer. Do not place flowable fill through flowing water.

B. Place flowable fill in lifts to prevent lateral pressures from exceeding structural capacity of structures and utilities.

C. Place flowable fill evenly on both sides of utilities to maintain alignment.

D. Place flowable fill to elevations indicated on Drawings without vibration or other means of compaction.

3.4 INSTALLATION - FILLING ABANDONED UTILITIES

A. Verify pipes and conduits are not clogged and are sufficiently empty to permit gravity installation of flowable fill for entire length indicated to be filled.

B. Seal lower end of pipes and conduits by method to contain flowable fill and to vent trapped air caused by filling operations.

C. Place flowable fill using method to ensure there are no voids.
   1. Fill pipes and conduits from high end.
   2. Fill manholes, tanks, and other structures from grade level access points.

D. After filling pipes and conduits seal both ends.

3.5 FIELD QUALITY CONTROL

A. Section 01 40 00 - Quality Requirements: Testing and Inspections by Owner.

B. Owner's representative will perform testing in accordance with ASTM C94/C94M. Testing requirements may be waived by Engineer for non-critical areas.
   1. Take samples for tests for every 150 cubic yard of flowable fill, or fraction thereof, installed each day.
   2. Sample, prepare and test four compressive strength test cylinders in accordance with ASTM D4832. Test one specimen at 3 days, one at 7 days, and two at 28 days.
   3. Measure temperature at point of delivery when samples are prepared.

C. Defective Flowable Fill: Fill failing to meet the following test requirements or fill delivered without the following documentation.
   1. Test Requirements:
      a. Minimum temperature at point of delivery.
      b. Compressive strength requirements for each type of fill.
   2. Documentation: Duplicate delivery tickets.

D. When tests indicate Work does not meet specified requirements, remove Work, replace and retest.

E. In accordance with GC13.08 Owner may choose to accept defective Work with a corresponding reduction in Contract Price. The amount of the reduction shall be proportional to the diminished value of the Work. Determination of the amount of diminished value shall be solely at the Engineer's discretion.

3.6 CLEANING

A. Remove spilled and excess flowable fill from Project site.

B. Restore facilities and site areas damaged or contaminated by flowable fill installation to existing condition before installation.

END OF SECTION

SECTION 31 23 33

TRENCHING AND BACFILLING

PART 1 GENERAL

1.1 SUMMARY

A. Section Includes:
1. Exploratory excavation.
2. Excavating trenches for utilities.
3. Compacted backfill from top of utility cover material to subgrade elevations.

B. Related Sections:
1. Section 31 10 00 - Site Clearing and Removals
2. Section 31 22 13 - Rough Grading
3. Section 31 23 19 - Dewatering
4. Section 21 23 23.33 - Flowable Fill
5. Section 31 25 00 - Erosion and Sedimentation Controls
6. Section 32 11 23 - Subbase Courses
7. Section 32 11 23 - Aggregate Base Courses
8. Section 32 91 19 - Landscape Grading
9. Section 33 05 13 - Public Manholes and Structures
10. Section 33 11 13 - Public Water Utility Distribution Piping
11. Section 33 12 13 - Public Water Utility Water Service Connections
12. Section 33 31 13 - Public Sanitary Utility Sewerage Piping
13. Section 33 41 13 - Public Storm Utility Drainage Piping
14. Section 33 46 00 - Public Storm Utility Subdrainage

1.2 PRICE AND PAYMENT PROCEDURES - UNIT PRICES

A. Exploratory Excavation:
1. Basis of Measurement: Cubic Yard
2. Basis of Payment: Includes trenching and backfill necessary to field locate existing utility or to verify depth of existing utility.
3. Basis of Application: This pay item will apply according to the field verification schedule provided on the Drawings. The pay item will also apply when unplanned additional excavation becomes necessary due to the discovery of undocumented utilities. In such cases, utility repairs will be paid for separately.

B. Trenching and Backfill:
1. Basis of Measurement: Not Applicable.
2. Basis of Payment: Payment for trenching and backfill will be included in the payment for construction of the utility.

1.3 REFERENCES

A. ASTM International:

1. ASTM C117 - Standard Test Method for Materials Finer than 75-µm (No. 200) Sieve in Mineral Aggregates by Washing
2. ASTM C136 - Standard Test Method for Sieve Analysis of Fine and Coarse Aggregates
3. ASTM D1557 - Standard Test Methods for Laboratory Compaction Characteristics of Soil Using Modified Effort (56,000 ft-lbf/ft^3)
4. ASTM D2922 - Standard Test Methods for Density of Soil and Soil-Aggregate in Place by Nuclear Methods (Shallow Depth)
5. ASTM D3017 - Standard Test Method for Water Content of Soil and Rock in Place by Nuclear Methods (Shallow Depth)

B. Michigan Department of Transportation (MDOT):
1. MDOT 2012 Standard Specifications for Construction
2. MDOT Density Testing and Inspection Manual, Current Edition.

C. Michigan Occupations Safety and Health Administration (MiOSHA)
1. Construction Safety Standards Part 9: Excavation, Trenching, and Shoring.

1.4 ADMINISTRATIVE REQUIREMENTS

A. Section 01 30 00 - Administrative Requirements: Coordination and project conditions.

B. Coordination: Verify Work associated with lower elevation utilities is complete before placing higher elevation utilities.

1.5 SUBMITTALS

A. Section 01 33 00 - Submittal Procedures: Requirements for submittals.

B. Materials Source: Submit source location and names of material suppliers.

C. Manufacturer's Certificate: Certify materials meet or exceed specified requirements.

1.6 QUALITY ASSURANCE

A. Preconstruction Testing:
1. Section 01 40 00 - Quality Requirements: Testing and Inspections by Owner.
2. Notify Engineer minimum two weeks prior to scheduled delivery of backfill material.
3. Allow Owner’s representative access to backfill material source for sampling and testing.
4. Confirm test results indicate conformance with specifications prior to delivery to site.
5. Owner reserves the right to collect and test additional samples of backfill material after delivery to site.

B. Single Source Responsibility: Furnish each backfill material from single source throughout the Work.

PART 2 PRODUCTS

2.1 MATERIALS

A. Backfill: MDOT 2012 Standard Specifications for Construction, Section 902.07.
   1. Class III Granular Material per Table 902-3.
   2. Class II or IIIA Granular Material per Table 902-3 may be substituted for Class III Granular Material with approval of Engineer.

B. Suitable on site material may be utilized as backfill with approval of Engineer.

C. Sound Earth: MDOT 2012 Standard Specifications for Construction, Section 205.01.

PART 3 EXECUTION

3.1 EXAMINATION

A. Section 01 30 00 - Administrative Requirements: Verification of existing conditions before starting work.

B. Verify pavement removals are complete to the limits required to excavate trench to the required depth.

3.2 PREPARATION

A. Call MISS DIG at 1-800-482-7171 or 811 not less than three full working days before performing any portion of the Work that involves any soil disturbance.
   1. Request underground utilities to be located and marked within and surrounding construction areas.
   2. Verify all utility companies have responded before commencing Work.

B. Identify required lines, levels, contours, and datum locations.

C. Protect plant life, lawns, and other features remaining as portion of final landscaping.

D. Protect bench marks, existing structures, fences, sidewalks, paving, and curbs from excavating equipment and vehicular traffic.

E. Maintain and protect above and below grade utilities indicated to remain.

F. Establish temporary traffic control and detours when needed. Relocate controls and reroute traffic as required during progress of Work.

G. Review and follow all construction safety standards set forth in MIOSHA Std. 1306 Part 9 “Excavation, Trenching, and Shoring”.

H. Schedule and perform exploratory excavation in presence of Engineer. Permit Engineer to take measurements of utilities exposed during exploratory excavation. Schedule

exploratory excavation prior to fabricating Public Manholes and Structures. Allow sufficient time for Engineer to make revisions to Drawings.

3.3 TRENCHING

A. Excavate subsoil required for utilities.

B. Remove lumped subsoil, boulders, and rock.

C. Cut trenches sufficiently wide, but no wider than is necessary to enable installation and allow compaction equipment and inspection.

D. Perform dewatering in accordance with Section 31 23 19 to remove water or materials that interfere with Work.

E. Excavate trenches to depth indicated on Drawings. Continue excavation to a minimum depth of 4 inches below bottom of pipe to provide room for bedding material. Provide uniform and continuous bearing and support for bedding material and pipe.

F. Do not interfere with bearing splay of foundations. As a general rule, a 45 degree slope shall be the maximum assumed bearing splay for any soil types. In certain soils, a flatter slope may needed.

G. When Project conditions permit, slope side walls of excavation. When side walls can not be sloped, provide sheeting and shoring to protect excavation as specified in this section.

H. When subsurface materials at bottom of trench are loose or soft, notify Engineer, and request instructions.

I. Trim excavation. Hand trim for bell and spigot pipe joints. Remove loose matter.

J. Correct over excavated areas with compacted backfill as specified for authorized excavation or replace with fill concrete as directed by Engineer.

K. Stockpile excavated material meeting requirements for trench backfill or subbase course.
   1. Stockpile materials on site at locations indicated by Engineer.
   2. Stockpile sufficient quantities to meet Project schedule and requirements.
   3. Separate differing materials with dividers or stockpile apart to prevent mixing.
   4. Direct surface water away from stockpile site to prevent erosion or deterioration of materials.
   5. Stockpile hazardous materials on impervious material and cover to prevent erosion and leaching, until disposed of.

L. Remove excess excavated material not suitable for reuse, from site.

M. Protect open trench to prevent danger to the public in accordance with MDOT 2012 Standard Specifications for Construction, Section 104.07.

3.4 SHEETING AND SHORING

A. Sheet, shore, and brace excavations to prevent danger to persons, structures and adjacent properties and to prevent caving, erosion, and loss of surrounding subsoil.

B. Support trenches more than 5 feet deep excavated through unstable, loose, or soft material. Provide sheeting, shoring, bracing, or other protection to maintain stability of excavation.

C. Design sheeting and shoring to be removed at completion of excavation work.

D. Repair damage caused by failure of the sheeting, shoring, or bracing and for settlement of filled excavations or adjacent soil.

E. Repair damage to new and existing Work from settlement, water or earth pressure or other causes resulting from inadequate sheeting, shoring, or bracing.

3.5 LINES AND GRADES

A. Lay pipes to lines and grades indicated on Drawings. Engineer reserves right to make changes in lines, grades, and depths of utilities when changes are required for Project conditions.

B. Use laser-beam instrument with qualified operator to establish lines and grades.

3.6 BACKFILLING

A. Notify Engineer prior to covering utility or placing any trench backfill.

B. Do not proceed with covering utility or placing any trench backfill until Engineer's representative is available on site to conduct density testing.

C. Backfill trenches to contours and elevations with unfrozen backfill materials.

D. Systematically backfill to allow maximum time for natural settlement. Do not backfill over porous, wet, frozen, or spongy subgrade surfaces.

E. Place backfill material in continuous layers and compact to 95 percent of the maximum density.

F. Employ placement method that does not disturb or damage utilities in trench.

G. Maintain optimum moisture content of bedding, cover, and backfill material to achieve required density.

3.7 FIELD QUALITY CONTROL

A. Section 01 40 00 - Quality Requirements: Testing and Inspections by Owner.

B. Geotechnical Tests:
   1. Provide Owner's representative with samples or access to stockpiles upon request.
   2. Owner's representative will perform laboratory testing of backfill material to determine gradation in accordance with ASTM C117 and ASTM C136.
   3. Owner's representative will perform testing of backfill material to determine maximum density in accordance with ASTM D 1557 or Michigan Cone Test.
   4. Owner's representative will perform in place compaction tests of backfill material in accordance with the following:
      a. Density Tests: ASTM D2922.
      b. Moisture Tests: ASTM D3017.
   5. Frequency of Tests: At each compacted backfill layer, one test for each 150 feet or less of trench length. Additional testing may be required at the discretion of the Engineer

C. When tests indicate Work does not meet specified requirements, remove Work, replace and retest.

3.8 PROTECTION OF FINISHED WORK

A. Reshape and re-compact fills subjected to vehicular traffic during construction.

3.9 STANDARDS DRAWINGS

A. Trench Detail A

B. Trench Detail B

TRENCH DETAIL A

TRENCHES NOT BELOW THE INFLUENCE OF PAVEMENT
(TRENCH SIDE SLOPES NOT SHOWN)

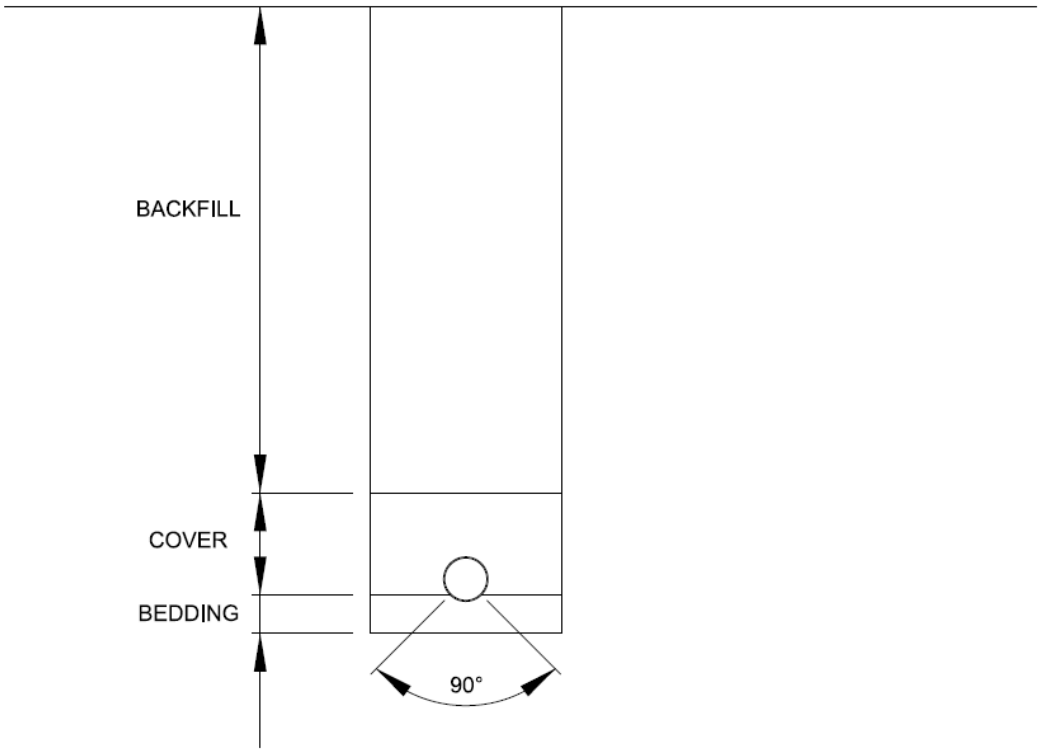

SCHEDULE OF MATERIALS

TYPE OF PIPE	BEDDING	COVER	BACKFILL
DUCTILE IRON	CL IIIA	CL IIIA	SOUND EARTH
CONCRETE	CL III	CL III	SOUND EARTH
PVC	CL III	CL III	SOUND EARTH

SOUND EARTH MATERIAL SHALL BE AS DEFINED IN SECTION 205 OF THE 2012 MDOT STANDARD SPECIFICATIONS FOR CONSTRUCTION.

TRENCH DETAIL B

TRENCHES BELOW PAVEMENT OR BELOW THE INFLUENCE OF PAVEMENT
(TRENCH SIDE SLOPES NOT SHOWN)

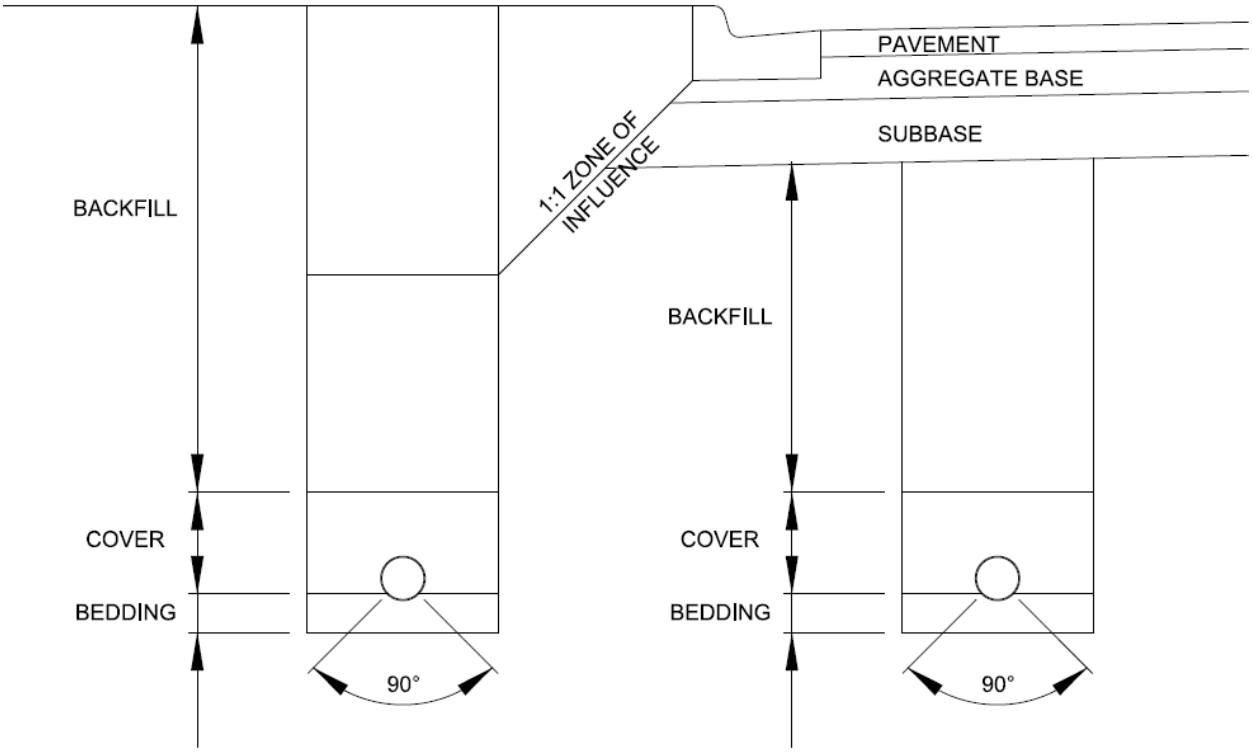

SCHEDULE OF MATERIALS

TYPE OF PIPE	BEDDING	COVER	BACKFILL*
DUCTILE IRON	CL IIIA	CL IIIA	CL III
CONCRETE	CL III	CL III	CL III
PVC	CL III	CL III	CL III

*BACKFILL MATERIAL NOT BELOW THE INFLUENCE OF THE PAVEMENT AS SHOWN MAY BE SOUND EARTH AS DEFINED IN SECTION 205 OF THE 2012 MDOT STANDARD SPECIFICATIONS FOR CONSTRUCTION.

END OF SECTION

SECTION 31 25 00

EROSION AND SEDIMENTATION CONTROLS

PART 1 GENERAL

1.1 SUMMARY

A. Section Includes:
1. Silt Fence.
2. Inlet Protection Devices.
3. Aggregate Cover.
4. Rip Rap.

B. Related Sections:
1. Section 31 10 00 - Site Clearing and Removals
2. Section 31 22 13 - Rough Grading
3. Section 31 23 19 - Dewatering
4. Section 31 23 33 - Trenching and Backfilling
5. Section 32 91 19 - Landscape Grading
6. Section 32 92 19 - Seeding

1.2 PRICE AND PAYMENT PROCEDURES - UNIT PRICES

A. Silt Fence:
1. Basis of Measurement: Foot
2. Basis of Payment: Includes installation, cleaning and sediment removal, maintenance and repair or replacement during the project, and removal upon completion of project.
3. Basis of Application: This pay item will apply to all silt fence installed at locations as directed by Engineer.

B. Inlet Protection, Fabric Drop:
1. Basis of Measurement: Each
2. Basis of Payment: Includes material, installation, cleaning and sediment removal, maintenance and repair during the project, and removal upon completion of project.
3. Basis of Application: This pay item will apply to all storm sewer inlets which the Engineer directs be protected with fabric drops.

C. Inlet Protection, Geotextile and Stone:
1. Basis of Measurement: Each
2. Basis of Payment: Includes excavation, geotextile and stone materials, installation, maintenance and removal.
3. Basis of Application: This pay item will apply to all storm sewer inlets which the Engineer directs be protected with geotextile and stone.

D. Aggregate Cover, __ inch:
   1. Basis of Measurement: Square Yard
   2. Basis of Payment: Includes excavation, geotextile, aggregate, and removal. When aggregate cover must be replaced, such replacement will be paid for separately as new aggregate cover.
   3. Basis of Application: This pay item will apply to gravel access drives and other areas where aggregate cover is required.

E. Rip Rap, (Plain/Heavy) :
   1. Basis of Measurement: Square Yard
   2. Basis of Payment: Includes excavation, geotextile liner, and rip rap.
   3. Basis of Application: This pay item will apply at storm water outlets and other locations where rip rap is specified.

F. Erosion Control, Turbidity Curtain, (Shallow/Deep):
   1. Basis of Measurement: Foot
   2. Basis of Payment: Includes cost of providing, installing, maintaining, and removing turbidity curtains.
   3. Basis of Application: This pay item will apply to all turbidity curtain installed at locations as directed by the Engineer.

1.3 REFERENCES

A. American Association of State Highway and Transportation Officials:
   1. AASHTO T88 - Standard Specification for Particle Size Analysis of Soils
   2. AASHTO M288 - Standard Specification for Geotextile Specification for Highway Applications

B. ASTM International:
   1. ASTM D3786 - Standard Test Method for Bursting Strength of Textile Fabrics – Diaphragm Bursting Strength Tester Method
   2. ASTM D4355 - Standard Test Method for Deterioration of Geotextiles by Exposure to Light, Moisture and Heat in a Xenon Arc Type Apparatus
   3. ASTM D4491 - Test Methods for Water Permeability of Geotextiles by Permittivity
   4. ASTM D4533 - Standard Test Method for Trapezoid Tearing Strength of Geotextiles
   5. ASTM D4632 - Standard Test Method for Grab Breaking Load and Elongation of Geotextiles
   6. ASTM D4751 - Standard Test Method for Determining Apparent Opening Size of a Geotextile
   7. ASTM D4833 - Standard Test Method for Index Puncture Resistance of Geomembranes and Related Products

C. Michigan Department of Transportation (MDOT):
   1. MDOT 2012 Standard Specifications for Construction

1.4 SUBMITTALS

A. Section 01 33 00 - Submittal Procedures: Requirements for submittals.

B. Product Data: Submit pertinent data for silt fencing, inlet protection devices, geotextile fabrics, and accessories.

C. Materials Source: Submit source location and names of material suppliers for stone, aggregate cover, and riprap.

D. Manufacturer's Certificate: Certify products and materials meet or exceed specified requirements.

PART 2 PRODUCTS

2.1 SILT FENCING

A. Products:
1. ACF Environmental: LS125.
2. Belton Industries, Inc.: Belton 940
3. CSI Geoturf, Inc.: Geoturf S1200, S1240, S1240CR, or S1400
4. Geoproducts, Inc.: Kintex SF-3
5. LinQ Industrial Fabrics: GTF-180
6. Propex Fabrics, Inc.: Propex 2130
7. Skaps Industries: SKAPS W100
8. Hanes Geo Components: TerraTex SC
9. Willacoochee Industrial Fabrics, Inc.: Style 1210
10. Substitutions: Section 01 60 00 - Product Requirements: Product Substitution Procedures.

B. Silt Fence: MDOT 2012 Standard Specifications for Construction, Section 916.02.
1. Geotextile for silt fence shall meet the requirements of MDOT 2012 Standard Specifications for Construction, Section 910.04.

2.2 INLET PROTECTION, FABRIC DROP

A. Products:
1. ACF Environmental: Siltsack.
2. Dandy Products, Inc.: Dandy Sack or Dandy Curb Sack.
3. Hanes Geo Components: Inlet Pro Sediment Bag.
4. Substitutions: Section 01 60 00 - Product Requirements: Product Substitution Procedures.

B. Removable inlet protection device constructed of geotextile material sewn to dimensions that allow for drop in installation in catch basin inlets. Protection device for curb inlets shall include an integral cylindrical portion to block inflow through the curb opening.

C. Geotextile material: Non-woven geotextile with the following minimum average roll value:

Property	Test Method	Minimum Average Roll Value
Grab Tensile Strength	ASTM D4632	450 x 300 lbs.
Grab Tensile Elongation	ASTM D4632	40 x 25%
Puncture Strength	ASTM D4833	130 lbs.
Mullen Burst	ASTM D3786	600 psi
Trapezoidal Tear	ASTM D4533	165 x 150 lbs.
UV Resistance	ASTM D4355	70% at 500 hours
Apparent Opening Size	ASTM D4751	30 Sieve
Permittivity	ASTM D4491	3.5 sec^{-1}
Flow Rate	ASTM D4491	250 gpm/ft^2

D. Frame: Metal or wood insert(s) to prevent device from dropping in catch basin and to allow for attachment of removal straps.

2.3 INLET PROTECTION, GEOTEXTILE AND STONE

A. Stone: MDOT 2012 Standard Specifications for Construction, Section 916.05.
1. Course Aggregate Class 6A or Open-Graded Aggregate 34R per Table 902-1.

B. Geotextile Blanket: MDOT 2012 Standard Specifications for Construction, Section 910.03.A.

2.4 AGGREGATE COVER

A. Aggregate: MDOT 2012 Standard Specifications for Construction, Section 916.01.B; Course Aggregate 3x1.

B. Geotextile Separator: MDOT 2012 Standard Specifications for Construction, Section 910.03.C.

2.5 RIPRAP

A. Natural stone, free from structural defects. Riprap manufactured from solid concrete blocks or sound pieces of broken concrete is not permitted.

B. Plain Riprap: MDOT 2012 Standard Specifications for Construction, Section 916.01.C; Plain Riprap.

C. Heavy Riprap: MDOT 2012 Standard Specifications for Construction, Section 916.01.C; Heavy Riprap.

D. Geotextile Liner: MDOT 2012 Standard Specifications for Construction, Section 910.03.B.

2.6 TURBIDITY CURTAIN

A. Turbidity Curtain: MDOT 2012 Standard Specifications for Construction, Section 916.07.

PART 3 EXECUTION

3.1 EXAMINATION

A. Section 01 30 00 - Administrative Requirements: Verification of existing conditions before starting work.

B. Verify compacted subgrade is acceptable and ready to support devices and imposed loads.

C. Verify gradients and elevations of base or foundation for other work are correct.

3.2 SILT FENCING

A. Installation:
   1. Align silt fence perpendicular to the direction of runoff with stakes on the downhill side of the fabric.
   2. Excavate shallow trench, install silt fence and backfill over bottom of fabric on upstream side. Bottom of fabric to extend minimum 6 inches below grade
   3. Install silt fence at an even grade, downstream from construction activity. Avoid low spots in silt fence.
   4. At ends of silt fence run, extend fencing up slope at a 45 degree angle to the main run for a minimum distance of 10 feet.

B. Maintenance:
   1. Remove accumulated sediment when sediment level reaches one third the height of the fabric.
   2. Repair or replace damaged silt fencing immediately.

C. Removal:
   1. Upon completion of the work, and sufficient stabilization of disturbed soils, remove accumulated sediment.
   2. Remove silt fencing.
   3. Restore disturbed soils with topsoil, seed, fertilizer and mulch per Section 32 91 19 - Landscape Grading and Section 32 92 19 - Seeding.

3.3 INLET PROTECTION, FABRIC DROP

A. Installation:
   1. Install inlet protection, fabric drop in existing storm sewer inlets prior to soil disturbance.

2. Install inlet protection devices at all storm sewer inlets within site and beyond site which may receive construction site storm water runoff.

B. Maintenance:
1. Remove accumulated sediment when sediment level reaches one third of depth of the device.
2. Repair or replace damaged device immediately.
3. Continue maintenance until time of removal.

C. Removal: Remove inlet protection device upon sufficient stabilization of disturbed soils within contributing area or as directed by Engineer.

3.4 INLET PROTECTION, GEOTEXTILE AND STONE

A. Installation:
1. Install inlet protection with geotextile and stone on new storm sewer inlets immediately after the structure has been installed.
a. Excavate a sump 2 feet deep around the structure.
b. Cover the open structure and line the excavated sump with a continuous piece of geotextile material.
c. Backfill sump with stone material.
d. Cover structure with steel plate to prevent geotextile from tearing.
e. Maintain until cast iron frames and covers are installed.

B. Maintenance:
1. Remove and replace geotextile and stone if stone becomes filled with sediment.
2. Remove accumulated sediment from surface of geotextile.
3. Repair or replace damaged geotextile immediately.
4. Continue maintenance until time of removal.

C. Removal: Remove when cast iron frame and cover is installed.

3.5 AGGREGATE COVER

A. Installation:
1. Excavate to required depth.
2. Remove and dispose of excavated material.
3. Install geotextile separator and coarse aggregate.

B. Maintenance:
1. If aggregate cover becomes filled with sediment, remove and replace.
2. Continue maintenance until time of removal.

C. Removal: Remove when necessary for performance of other work including underground utility installation, pavement restoration, or landscape grading.

3.6 RIPRAP

A. Excavate to required subgrade level. Horizontal dimensions of rip rap area shall be as shown on plans or as directed by Engineer. Remove loose, unsuitable subgrade material and replace with suitable material. Thoroughly compact and finish entire subgrade area to firm, even surface.

B. Install geotextile liner on prepared subgrade. Lay fabric parallel to direction of flow from upstream to downstream. Overlap edges upstream over downstream and upslope over downslope.

C. Carefully place rock riprap on geotextile liner to produce an even distribution of pieces, with minimum of voids and without tearing geotextile.

D. Unless otherwise indicated, place full course thickness in one operation to prevent segregation and avoid displacement of underlying material. Arrange individual rocks for uniform distribution.

3.7 SITE STABILIZATION

A. Incorporate erosion control devices indicated on the Drawings into the Project at the earliest practicable time.

B. Construct, stabilize and activate erosion controls before site disturbance within tributary areas of those controls.

C. Stabilize any disturbed area on which activity has ceased and which will remain exposed for more than 20 days.
   1. During non-germinating periods, apply mulch at recommended rates.
   2. Stabilize disturbed areas which are at finished grade in accordance with Section 32 91 19 - Landscape Grading and Section 32 92 19 - Seeding.

D. Stabilize diversion channels, sediment traps, and stockpiles immediately.

3.8 FIELD QUALITY CONTROL

A. Inspect erosion control devices on a weekly basis and after each runoff event. Make necessary repairs to ensure erosion and sedimentation controls are in good working order.

3.9 CLEANING

A. When sediment accumulation in sedimentation structures has reached a point one-third depth of sediment structure or device, remove and dispose of sediment.

B. Do not damage structure or device during cleaning operations.

C. Clean sediment accumulation from manholes, inlets, and catch basins where sediment has bypassed control device.

D. Do not permit sediment to erode into construction or site areas or natural waterways.

END OF SECTION

SECTION 32 01 16

FLEXIBLE PAVING REHABILITATION

PART 1 GENERAL

1.1 SUMMARY

A. Section Includes:
1. Adjusting structure covers.
2. Temporary lowering of structures.
3. Adjusting valve boxes.
4. Cold milling the surface of existing pavements.
5. Crushing, shaping, and compacting HMA pavements for in-place reuse as aggregate base.

B. Related Sections:
1. Section 31 10 00 - Site Clearing and Removals
2. Section 32 11 23 - Aggregate Base Courses
3. Section 32 12 16 - Asphalt Paving
4. Section 33 05 13 - Public Manholes and Structures

1.2 PRICE AND PAYMENT PROCEDURES - UNIT PRICES

A. Structure Cover, Adjust, Case 1:
1. Basis of Measurement: Each
2. Basis of Payment: Includes sawcutting, pavement removal, excavation, removing the structure cover, removing unsound structure materials 6 inches deep or less, adjusting rings, reinstalling the existing cover, and patching the pavement base course with concrete. Curb or curb & gutter removal and replacement will be measured and paid for separately.
3. Basis of Application: This pay item will apply to all manhole, catch basin, or similar utility structures within paved areas where the cover must be adjusted up or down 6 inches or less to meet the proposed grade.

B. Structure Cover, Adjust, Case 2:
1. Basis of Measurement: Each
2. Basis of Payment: Includes excavation, removing the structure cover, removing unsound structure materials 6 inches deep or less, adjusting rings, and reinstalling the existing cover.
3. Basis of Application: This pay item will apply to all manhole, catch basin, or similar utility structures outside of paved areas, or in paved areas where the pavement removal is paid for separately, where the cover must be adjusted up or down 6 inches or less to meet the proposed grade.

C. Structure, Adjust, Additional Depth:
1. Basis of Measurement: Foot, measured from the existing grade to the proposed grade, minus 6 inches.

2. Basis of Payment: Includes removing unsound structure materials, and replacing with adjusting rings to the required depth.
3. Basis of Application: This pay item will apply to structures where the depth of adjustment exceeds 6 inches. Reconstruction of existing structures below the bottom of adjusting rings will be paid for separately.

D. Structure, Temp Lowering:
1. Basis of Measurement: Each
2. Basis of Payment: Includes marking, pavement removal, excavation, salvaging structure covers, transporting structure covers to and from site, storing structure covers offsite, plating the structure, and installing and removing temporary gravel.
3. Basis of Application:
   a. This pay item will apply to all structures within the roadway where temporary lowering is required as preparation for cold milling the pavement surface.
   b. On projects where this pay item is not included in the Bid Form, but contractor elects to perform temporary lowering in lieu of other methods, this work will be not be paid for separately.
   c. Separate payment will be made for reinstalling and adjusting structure covers.

E. Valve Box, Adjust:
1. Bases of Measurement: Each
2. Basis of Payment: Includes sawcutting, pavement removal, excavation, vertical adjustment of existing valve box, backfill, and compaction.
3. Basis of Application: This pay item will apply to the raising or lowering of existing water valve boxes and covers.

F. Valve Box, Replace:
1. Basis of Measurement: Each
2. Basis of Payment: Includes sawcutting, pavement removal, excavation, cleaning around water valve, placing new valve box over existing water valve, backfill, and compaction.
3. Basis of Application: This pay item will apply if the height of the existing water valve box is too short to permit adjustment to final grade or if the existing valve box is unsuitable for reuse as determined by Engineer.

G. Monument Box, Adjust:
1. Basis of Measurement: Each
2. Basis of Payment: Includes sawcutting, pavement removal, excavation, removing the monument box, placing new monument box over existing survey marker, and patching the pavement base course with concrete.

H. Cold Milling HMA Surface:
1. Basis of Measurement: Square Yard
2. Basis of Payment: Includes removal of HMA pavement material to the specified depth using cold milling machines; loading, hauling, and disposal of millings; and cleaning the remaining pavement.

3. Basis of Application: This pay item will apply where the surface of an HMA pavement is to be removed to a specified depth. Where the entire thickness of an HMA pavement is specified to be removed, that work will be paid for as HMA Surface, Rem per Section 31 10 00 - Site Clearing and Removals.

I. Cold Milling Concrete Surface:
1. Basis of Measurement: Square Yard
2. Basis of Payment: Includes removing the surface of concrete pavement to the required depth; loading, hauling, and disposal of millings; and cleaning the remaining pavement.
3. Basis of Application: This pay item will apply where miscellaneous concrete patches are encountered while cold milling HMA pavements.

J. HMA Base Crushing and Shaping:
1. Basis of Measurement: Square Yard
2. Basis of Payment: Includes crushing to the specified depth, grading, transporting within site, shaping, rolling, modifying moisture content, compacting, and removing surplus material. Supplying additional base aggregate material shall be paid for separately.
3. Basis of Application: This pay item will apply where existing HMA pavements are specified to be crushed in place and reused as aggregate base course.

1.3 REFERENCES

A. Abbreviations and Acronyms:
1. HMA: Hot Mix Asphalt
2. Pavt.: Pavement

B. Reference Standards:
1. American Association of State Highway and Transportation Officials:
   a. AASHTO M306 - Standard Specification for Drainage, Sewer, Utility, and Related Castings
2. ASTM International:
   a. ASTM A48/A48M - Standard Specification for Gray Iron Castings
   b. ASTM A536 - Standard Specification for Ductile Iron Castings

1.4 AMBIENT CONDITIONS

A. Do not crush HMA pavement when anticipated precipitation may cause prepared base to become unstable.

PART 2 PRODUCTS

2.1 MONUMENT BOXES

A. Products:
1. EJ Group, Inc.: Model 1574.
2. Substitutions: Section 01 60 00 - Product Requirements

B. ASTM A48/A48M, Class 35B gray cast iron and/or ASTM A536 ductile iron construction.
   1. Machined flat bearing surfaces.
   2. Live Load Rating: 40,000 lbs.
   3. Finish: Uncoated.

2.2 EQUIPMENT

A. Cold-Milling Machine
   1. Self-propelled machine which consistently removes the HMA surface, in one or more passes, to the required grade and cross section producing a uniformly textured surface.
   2. Cold milling machine shall be equipped with the following features:
      a. Automatically controlled and activated cutting drums.
      b. Grade reference and transverse slope control capabilities.
      c. Approved grade referencing attachment, not less than 30 feet in length.

B. Crushing Machine
   1. Self-propelled rotary reduction crushing machine which consistently crushes the pavement to the required particle size and mixes the crushed material with the underlying aggregate base to the specified depth.

2.3 CRUSHED PAVEMENT MATERIAL

A. 95 percent of the crushed pavement material shall have a maximum particle size of 1½ inches, with no particle size exceeding 4 inches.

PART 3 EXECUTION

3.1 EXAMINATION

A. Section 01 30 00 - Administrative Requirements: Verification of existing conditions before starting work.

B. Verify cold milling and HMA base crushing and shaping limits.

C. Verify location of existing structures, valve boxes, and government survey corners requiring lowering prior to cold milling or HMA base crushing and shaping.

3.2 PREPARATION

A. If any government survey corners are found within the pavement scheduled for cold milling or HMA base crushing and shaping, notify Engineer. Do not disturb corners without prior approval.

3.3 ADJUSTMENT OF EXISTING STRUCTURES

A. Where required, adjust top elevation of existing manholes and structures to finished grades shown on Drawings.

B. Cut square opening through pavement to remain and remove material as necessary to remove existing grates, covers, and frames.

C. Carefully remove existing grates, covers, and frames; clean of remaining mortar fragments. If new frames and covers are specified, salvage existing grates, covers, and frames and deliver to Owner.

D. Verify distance from final grade to top step and suitability of existing structure for adjustment.

E. Remove existing adjusting rings and bricks to top of precast concrete structure or to sound material.

F. If structure top section is unsuitable for adjustment, reconstruct or replace structure top section in accordance with Section 33 05 13 - Public Manholes and Structures.

G. Reinstall salvaged grates, covers, and frames or install new frames and covers in accordance with Section 33 05 13 – Public Manholes and Structures.

3.4 TEMPORARY LOWERING OF STRUCTURES

A. Perform temporarily lowering of manhole and structure covers prior to cold milling and HMA base crushing and shaping.

B. Cut square opening through pavement to remain and remove material as necessary to remove existing grates, covers, and frames.

C. Remove existing grates, covers, and frames from pavement to be milled. Clean of mortar fragments. If existing grates, covers, and frames are to be reused, salvage and store offsite. Do not store on private property adjacent to Work.

D. Remove existing adjusting rings and bricks to top of precast concrete structure or to sound material.

E. Cover structure opening with a temporary plate suitable to support traffic. Backfill to grade with Maintenance Gravel.

F. After completing cold milling, reinstall salvaged grates, covers, and frames or install new frames and covers in accordance with Section 33 05 13 - Public Manholes and Structures.

3.5 ADJUSTMENT AND REPLACEMENT OF VALVE BOXES

A. Where required, adjust top elevation of existing water valve boxes to finished grades shown on Drawings.

B. Temporarily lower valve boxes prior to cold milling or HMA base crushing and shaping.

C. Cut square opening through pavement to remain and remove material as necessary to adjust valve box.

D. Rotate top segment of valve box to adjust to finished grade. After adjustment, ensure that top segment and lower segment remain connected.

E. If existing valve box cannot be adjusted to finished grade, remove and replace valve box. Excavate to valve, clean top of valve and coordinate valve exercising with Owner. After valve has been exercised and inspected by Owner, install new valve box in accordance with Section 33 11 13 - Public Water Distribution Piping.

3.6 ADJUSTMENT OF MONUMENT BOXES

A. Where required, protect survey monuments located within pavement rehabilitation limits. Remove and replace monument boxes. Adjust top elevation to finished grades shown on Drawings.

B. Obtain location mark on pavement from surveyor responsible for section corner installation.

C. Cut square opening through pavement to remain and remove material as necessary to place monument box frame and cover.

D. Contact surveyor responsible for monument installation. Schedule adequate time for monument placement.

E. Center monument box over installed monument.
1. Tolerance: Center of monument box shall be within 1/2 inch of center of monument.

F. Adjust height of monument box to match finished road surface prior to final paving.

G. Fill remaining excavated space with concrete paving, flush with top of surrounding pavement base and leveling courses.

3.7 COLD MILLING PAVEMENT SURFACE

A. Butt Joints
1. Create butt joints at the limits of all HMA pavement overlays.
2. Remove pavement by cold milling to the specified depth of the overlay, across the entire width of the overlay.
3. Uniformly taper the removal depth to zero over a minimum distance of 35 feet, measured parallel with the flow of traffic.

B. Cold Milling
1. Remove the pavement surface to the depth, width, grade, and cross section specified.
2. Immediately after cold milling, clean the remaining pavement surface and dispose of surplus material.
3. Correct all depressions left by removing material below the specified grade.
   a. Place asphalt leveling or top course to fill depressions, as required.
   b. Pay costs.

3.8 HMA BASE CRUSHING AND SHAPING

A. Crushing
1. Crush the existing pavement and blend with underlying aggregate base material to the specified depth.
2. Apply water with an approved sprinkling system to suppress dust generated.
3. Continuously operate crushing machine, or repeat crushing, until all of the pavement is reduced to crushed pavement material.
4. Remove by hand any remaining pieces of pavement exceeding maximum particle size.

B. Grading and Compacting
1. Construct an aggregate base course of the crushed pavement material, to the specified grade and cross section, in accordance with Section 32 11 23 - Aggregate Base Courses.
2. Transport crushed material within site to achieve the required grade and cross section.
3. Supply and place supplemental aggregate base material in accordance with Section 32 11 23 - Aggregate Base Courses or remove surplus material to achieve the required grade and cross section.
4. Repair any unstable base caused by over watering or the non-uniform application of water.

3.9 PROTECTION OF FINISHED WORK

A. Do not permit traffic over exposed pavement edges.
1. If traffic must be maintained on milled or crushed surfaces, install an approved temporary ramp device to protect exposed pavement edge and to prevent damage to vehicles.

END OF SECTION

SECTION 32 05 19.19

GEOGRIDS FOR EXTERIOR IMPROVEMENTS

PART 1 GENERAL

1.1 SUMMARY

A. Section Includes:
1. Geogrid reinforcement for use with aggregate base course.

B. Related Sections:
1. Section 32 11 16 - Subbase Courses
2. Section 32 11 23 - Aggregate Base Courses

1.2 PRICE AND PAYMENT PROCEDURES - UNIT PRICES

A. Geogrid:
1. Basis of Measurement: Square Yard
2. Basis of Payment: Includes supplying and installing a geogrid reinforcement layer where required. Areas of overlapping material will be measured only once.
3. Basis of Application: This pay item will apply where called for on the Drawings.

1.3 REFERENCES

A. ASTM International:
1. ASTM D4355 - Standard Test Method for Deterioration of Geotextiles by Exposure to Light, Moisture and Heat in a Xenon Arc Type Apparatus
2. ASTM D6637 - Standard Test Method for Determining Tensile Properties of Geogrids by the Single or Multi-Rib Tensile Method
3. ASTM D7737 - Standard Test Method for Individual Geogrid Junction Strength

B. Environmental Protection Agency (EPA):
1. Method 9090 - Compatibility Test for Wastes and Membrane Liners

1.4 SUBMITTALS

A. Section 01 33 00 - Submittal Procedures: Requirements for submittals.

B. Product Data: Submit pertinent data for geogrids and accessories.

C. Manufacturer’s Installation Instructions: Indicate special procedures required to install products specified.

D. Manufacturer's Certificate: Certify materials meet or exceed specified requirements.

1.5 QUALITY ASSURANCE

A. Qualifications:
   1. Manufacturers: Company specializing in manufacturing products specified in the section.
   2. Installers: Company specializing in performing work of this section with minimum three years documented experience.

B. Single Source Responsibility: Furnish each material from single source throughout the Work.

PART 2 PRODUCTS

2.1 MATERIALS

A. Geogrid: Drawn extruded polypropylene sheet, biaxial geogrid,
   1. Products:
      a. Tensar International Corporation: TriAx® TX160
      b. Substitutions: 01 60 00 – Product Requirements
   2. Physical Properties:
      a. Minimum Roll Size: 9.8 feet wide by 246 feet long
      b. Aperture Shape: Triangular
      c. Rib Shape: Rectangular
      d. Rib Pitch: 1.60 inch longitudinal x 1.60 inch diagonal
      e. Mid-rib Depth: 0.06 inch diagonal by 0.06 inch transverse
      f. Mid-rib Width: 0.04 inch diagonal by 0.05 inch transverse
   3. Structural Integrity:
      a. Junction Efficiency: 93% of ultimate tensile strength in accordance with ASTM D6637 and ASTM D7737.
      b. Radial Stiffness at Low Strain: 20,580 lb. per foot at 0.5% strain in accordance with ASTM D6637.
   4. Durability:
      a. Resistance to Chemical Degradation: 100% in accordance with EPA 9090 immersion testing.
      b. Resistance to UV Light and Weathering: 70% at 500 hours in accordance with ASTM D4355.

PART 3 EXECUTION

3.1 EXAMINATION

A. Section 01 30 00 - Administrative Requirements: Verification of existing conditions before starting work.

B. Verify subbase has been inspected, gradients and elevations are correct.

C. Verify all underground utility work has been completed, tested, inspected, and accepted prior to placing geogrid.

3.2 PREPARATION

A. Complete the work of Section 32 11 16 - Subbase Courses.

B. Correct irregularities in subbase gradient and elevation by scarifying, reshaping, and recompacting.

C. Do not place fill on soft, muddy, or frozen surfaces.

D. Determine geogrid layout including roll orientation, width, length, overlap, and direction of placement.
   1. Minimum overlap: 24 inches.

E. Submit proposed layout for approval.

3.3 GEOGRID PLACEMENT

A. Lay geogrid on subbase course in accordance with approved layout, with direction of overlaps to coincide with planned direction of aggregate placement.

B. Install temporary holds (pins or small piles of aggregate) to hold all pieces in position until covered with aggregate base course.

C. Eliminate wrinkles, ensure all material is taught.

D. Install geogrid in accordance with manufacturer's written instructions.

3.4 AGGREGATE PLACEMENT

A. Place aggregate in accordance with Section 32 11 23 – Aggregate Base Courses and this section.

B. Observe geogrid during placement of aggregate, watch for movement and development of wrinkles.
   1. If minor stretching or wrinkling occurs, remove temporary holds to release wrinkles. Ensure minimum overlap is maintained.

C. If geogrid does not remain taught and wrinkles are covered with aggregate, or if minimum overlap is not maintained, remove aggregate, replace any damaged geogrid, and replace aggregate.

3.5 PROTECTION

A. Do not operate equipment directly on geogrid.

B. Prevent movement of geogrid or damage to geogrid until aggregate cover is in place.

END OF SECTION

SECTION 32 11 16

SUBBASE COURSES

PART 1 GENERAL

1.1 SUMMARY

A. Section Includes:
1. Granular subbase courses constructed on prepared subgrade.

B. Related Sections:
1. Section 31 22 13 - Rough Grading
2. Section 31 23 19 - Dewatering
3. Section 31 23 33 - Trenching and Backfilling
4. Section 31 25 00 – Erosion and Sedimentation Controls
5. Section 32 05 19.19 - Geogrids for Exterior Improvements
6. Section 32 11 23 - Aggregate Base Courses
7. Section 32 12 16 - Asphalt Paving
8. Section 32 13 13 - Concrete Paving

1.2 PRICE AND PAYMENT PROCEDURES - UNIT PRICES

A. Subbase, CIP:
1. Basis of Measurement: Cubic Yard
2. Basis of Payment: Includes supplying subbase course material, stockpiling, scarifying, shaping and compacting the substrate surface, placing subbase material and compacting.

1.3 REFERENCES

A. Abbreviations and Acronyms:
1. CIP: Compacted in Place

B. Reference Standards:
1. ASTM International:
   a. ASTM C117 - Standard Test Method for Materials Finer than 75-µm (No. 200) Sieve in Mineral Aggregates by Washing
   b. ASTM C136 - Standard Test Method for Sieve Analysis of Fine and Coarse Aggregates
   c. ASTM D1557 - Standard Test Methods for Laboratory Compaction Characteristics of Soil Using Modified Effort (56,000 ft-lbf/ft^3)
   d. ASTM D2922 - Standard Test Methods for Density of Soil and Soil-Aggregate in Place by Nuclear Methods (Shallow Depth)
   e. ASTM D3013 – Standard Test Method for Water Content of Soil and Rock in Place by Nuclear Methods (Shallow Depth)
2. Michigan Department of Transportation (MDOT):
   a. MDOT 2012 Standard Specifications for Construction

b. MDOT Density Testing and Inspection Manual, Current Edition

1.4 SUBMITTALS

A. Section 01 33 00 - Submittal Procedures: Requirements for submittals.

B. Materials Source: Submit source location and names of material suppliers.

C. Manufacturer's Certificate: Certify materials meet or exceed specified requirements.

1.5 QUALITY ASSURANCE

A. Preconstruction Testing:
1. Section 01 40 00 - Quality Requirements: Testing and Inspections by Owner.
2. Notify Engineer minimum two weeks prior to scheduled delivery of subbase material.
3. Allow Owner's representative access to subbase material source for sampling and testing.
4. Confirm test results indicate conformance with specifications prior to delivery to site.
5. Owner reserves the right to collect and test additional samples of subbase material after delivery to site.

B. Single Source Responsibility: Furnish each subbase material from single source throughout the Work.

PART 2 PRODUCTS

2.1 MATERIALS

A. Subbase: MDOT 2012 Standard Specifications for Construction, Section 902.07.
1. Class II Granular Material per Table 902-3.

B. Suitable on site material may be utilized as subbase with approval of Engineer.

PART 3 EXECUTION

3.1 EXAMINATION

A. Section 01 30 00 - Administrative Requirements: Verification of existing conditions before starting work.

B. Verify compacted substrate is dry and ready to support paving and imposed loads.
1. Proof roll substrate with heavy, pneumatic tired rollers in minimum two perpendicular passes to identify soft spots.
2. Remove soft substrate and replace with compacted fill as specified in Section 31 22 13 - Rough Grading.

C. Verify substrate has been inspected, gradients and elevations are correct.

3.2 PREPARATION

A. Correct irregularities in substrate gradient and elevation by scarifying, reshaping, and re-compacting.

B. Do not place subbase on soft, muddy, or frozen surfaces.

3.3 AGGREGATE PLACEMENT

A. Place subbase aggregate in equal thickness layers to total compacted thickness indicated on Drawings. Compacted layer thickness shall not exceed 12 inches.

B. Roller compact subbase to 95 percent maximum density as defined by ASTM D1557.

C. Level and contour surfaces to elevations, profiles, and gradients indicated.

D. Maintain optimum moisture content of subbase material to attain specified compaction density.

E. Use mechanical tamping equipment in areas inaccessible to compaction equipment.

3.4 TOLERANCES

A. Section 01 40 00 - Quality Requirements: Tolerances.

B. Maximum Variation from Flat Surface: ½ inch measured with 10 foot straight edge.

C. Maximum Variation from Thickness: ½ inch.

D. Maximum Variation from Elevation: ½ inch.

3.5 FIELD QUALITY CONTROL

A. Section 01 40 00 - Quality Requirements: Testing and Inspections by Owner.

B. Geotechnical Tests:
   1. Provide Owner's representative with samples or access to stockpiles upon request.
   2. Owner's representative will perform laboratory testing of subbase material to determine gradation in accordance with ASTM C117 and ASTM C136.
   3. Owner's representative will perform testing of subbase material to determine maximum density in accordance with ASTM D1557 or Michigan Cone Test.
   4. Owner's representative will perform in place compaction tests of subbase material in accordance with the following:
      a. Density Tests: ASTM D2922.
      b. Moisture Tests: ASTM D3017.

5. Frequency of Tests: One test for every 250 square yards of each layer of compacted subbase material. Additional testing may be required at the discretion of the Engineer.

C. When tests indicate Work does not meet specified requirements, remove Work, replace and retest.

END OF SECTION

SECTION 32 11 23

AGGREGATE BASE COURSES

PART 1 GENERAL

1.1 SUMMARY

A. Section Includes:
1. Aggregate base courses constructed on prepared subbase.

B. Related Sections:
1. Section 31 22 13 - Rough Grading
2. Section 31 23 19 - Dewatering
3. Section 31 23 33 - Trenching and Backfilling
4. Section 31 25 00 - Erosion and Sedimentation Controls
5. Section 32 05 19.19 - Geogrids for Exterior Improvements
6. Section 32 11 16 - Subbase Courses
7. Section 32 12 16 - Asphalt Paving
8. Section 32 13 13 - Concrete Paving

1.2 PRICE AND PAYMENT PROCEDURES - UNIT PRICES

A. Aggregate Base, (Class) , __ inch:
1. Basis of Measurement: Square Yard, compacted in place
2. Basis of Payment: Includes supplying aggregate base course material, stockpiling, scarifying substrate surface, placing aggregate base material, and compacting.

B. Aggregate Base, (Class):
1. Basis of Measurement: Cubic Yard, compacted in place
2. Basis of Payment: Includes supplying aggregate base course material, stockpiling, scarifying substrate surface, placing aggregate base material, and compacting.

1.3 REFERENCES

A. Abbreviations and Acronyms:
1. CIP: Compacted in Place

B. Reference Standards:
1. ASTM International:
   a. ASTM C117 - Standard Test Method for Materials Finer than 75-µm (No. 200) Sieve in Mineral Aggregates by Washing
   b. ASTM C136 - Standard Test Method for Sieve Analysis of Fine and Coarse Aggregates

c. ASTM D1557 - Standard Test Methods for Laboratory Compaction Characteristics of Soil Using Modified Effort (56,000 ft-lbf/ft3)
d. ASTM D2922 - Standard Test Methods for Density of Soil and Soil-Aggregate in Place by Nuclear Methods (Shallow Depth)
e. ASTM D3017 - Standard Test Method for Water Content of Soil and Rock in Place by Nuclear Methods (Shallow Depth)

2. Michigan Department of Transportation (MDOT):
   a. MDOT 2012 Standard Specifications for Construction
   b. MDOT Density Testing and Inspection Manual, Current Edition

1.4 SUBMITTALS

A. Section 01 33 00 - Submittal Procedures: Requirements for submittals.

B. Materials Source: Submit source location and names of material suppliers.

C. Manufacturer's Certificate: Certify materials meet or exceed specified requirements.

1.5 QUALITY ASSURANCE

A. Preconstruction Testing:
   1. Section 01 40 00 - Quality Requirements: Testing and Inspections by Owner.
   2. Notify Engineer minimum two weeks prior to scheduled delivery of base course material.
   3. Allow Owner’s representative access to base course material source for sampling and testing.
   4. Confirm test results indicate conformance with specifications prior to delivery to site.
   5. Owner reserves the right to collect and test additional samples of base course material after delivery to site.

B. Single Source Responsibility: Furnish each base course material from single source throughout the Work.

PART 2 PRODUCTS

2.1 MATERIALS

A. Base Aggregate: MDOT 2012 Standard Specifications for Construction, Section 902.05.
   1. Dense-Graded Aggregate per Tables 902-1 and 902-2 of the Class shown on the Drawings and indicated in the pay items.
   2. The use of crushed concrete is prohibited within 100 feet of any water course (stream, river, county drain, etc.) and lake, regardless of the application or location of the water course or lake relative to the project limits.

PART 3 EXECUTION

3.1 EXAMINATION

A. Section 01 30 00 - Administrative Requirements: Verification of existing conditions before starting work.

B. Verify subbase has been inspected, gradients and elevations are correct.

3.2 PREPARATION

A. Complete the work of Section 32 11 16 - Subbase Courses.

B. Correct irregularities in subbase gradient and elevation by scarifying, reshaping, and recompacting.

C. Do not place aggregate base on soft, muddy, or frozen surfaces.

3.3 AGGREGATE PLACEMENT

A. Place aggregate base in equal thickness layers to total compacted thickness indicated on Drawings. Compacted layer thickness shall not exceed 6 inches.

B. Roller compact aggregate base to 98 percent maximum density as defined by ASTM D1557.

C. Level and contour surfaces to elevations, profiles, and gradients indicated.

D. Maintain optimum moisture content of aggregate base material to attain specified compaction density.

E. Use mechanical tamping equipment in areas inaccessible to compaction equipment.

3.4 TOLERANCES

A. Section 01 40 00 - Quality Requirements: Tolerances.

B. Maximum Variation from Flat Surface: ¼ inch measured with 10 foot straight edge.

C. Maximum Variation from Thickness: ¼ inch.

D. Maximum Variation from Elevation: ¼ inch.

3.5 FIELD QUALITY CONTROL

A. Section 01 40 00 - Quality Requirements: Testing and Inspections by Owner.

B. Geotechnical Tests:

1. Provide Owner's representative with samples or access to stockpiles upon request.
2. Owner's representative will perform laboratory testing of base course material to determine gradation in accordance with ASTM C117 and ASTM C136.
3. Owner's representative will perform testing of base course material to determine maximum density in accordance with ASTM D1557 or Michigan Cone Test.
4. Owner's representative will perform in place compaction tests of base course material in accordance with the following:
   a. Density Tests: ASTM D2922.
   b. Moisture Tests: ASTM D3017.
5. Frequency of Tests: One test for every 250 square yards of each layer of compacted aggregate base material. Additional testing may be required at the discretion of the Engineer.

C. When tests indicate Work does not meet specified requirements, remove Work, replace and retest.

END OF SECTION

SECTION 32 12 16

ASPHALT PAVING

PART 1 GENERAL

1.1 SUMMARY

A. Section Includes:
1. Asphalt materials.
2. Asphalt paving base courses, leveling courses, and top courses.

B. Related Sections:
1. Section 32 01 16 - Flexible Paving Rehabilitation
2. Section 32 11 16 - Subbase Courses
3. Section 32 11 23 - Aggregate Base Courses
4. Section 32 13 13 - Concrete Paving
5. Section 32 17 23 - Pavement Markings
6. Section 33 05 13 - Public Manholes and Structures

1.2 PRICE AND PAYMENT PROCEDURES - UNIT PRICES

A. HMA, (mixture type):
1. Basis of Measurement: Ton
2. Basis of Payment: Includes cleaning and tack coating surfaces, furnishing, placing, and compacting the asphalt paving course.
3. Basis of Application: This pay item will apply to all HMA mixtures that are placed with paving machinery.

B. Hand Patching:
1. Basis of Measurement: Ton
2. Basis of Payment: Includes cleaning surfaces, furnishing, placing, and compacting the asphalt pavement material.
3. Basis of Application: This pay item will apply to miscellaneous patches and repairs which require that the HMA mixture be placed by hand methods.

1.3 REFERENCES

A. Abbreviations and Acronyms:
1. HMA: Hot Mix Asphalt

B. Reference Standards:
1. Michigan Department of Transportation (MDOT):
   a. MDOT 2012 Standard Specifications for Construction
   b. MDOT Special Provision for Recycled Hot Mix Asphalt Mixture on Local Agency Projects; 12SP-501E-04
   c. MDOT Special Provision for Marshall Hot Mix Asphalt Mixture; 12SP-501F-01

d. MDOT Special Provision for Acceptance of Hot Mix Asphalt Mixture on Local Agency Projects; 12SP-501J-04
e. MDOT Special Provision for Superpave Final Aggregate Blend Requirements; 12SP-902E-03
f. MDOT HMA Production Manual
g. MDOT Manual for the Michigan Test Methods
h. MDOT Density Testing and Inspection Manual, Current Edition

1.4 SUBMITTALS

A. Section 01 33 00 - Submittal Procedures: Requirements for submittals.

B. Product Data:
1. Submit product information for asphalt and aggregate materials.
2. Submit mix design with laboratory test results supporting design.

C. Samples:
1. Submit original samples of asphalt binder to be incorporated into each asphalt mixture. The frequency of sampling will be determined by Engineer.

D. Manufacturer's Certificate: Certify materials meet or exceed specified requirements.

E. Qualification Statements: Submit documented experience of installer.

1.5 QUALITY ASSURANCE

A. Qualifications:
1. Installers: Company specializing in performing work of this section with minimum three years documented experience.

B. Section 01 40 00 - Quality Requirements: Testing and Inspections by Owner.

C. Single Source Responsibility: Furnish each asphalt paving material from single source throughout the Work.

D. Mixing Plant: Certified by Michigan Department of Transportation.

E. Perform Work in accordance with Michigan Department of Transportation standards.

1.6 AMBIENT CONDITIONS

A. Do not place asphalt mixture between November 15 and May 5.

B. Do not place asphalt mixture when ambient air or base surface temperature is less than 40 degrees F, or surface is wet or frozen.

PART 2 PRODUCTS

2.1 ASPHALT MATERIALS

A. Asphalt Binder: MDOT 2012 Standard Specifications for Construction, Section 904.03.A.
   1. Performance Graded Asphalt Binder per Table 904-2, as follows:
      a. PG 58-28 for mixture types 13A, 36A, and LVSP.
      b. PG 64-28 for mixture types 2C, 3C, 4C, 4E1, and 5E1.

B. Bond Coat: MDOT 2012 Standard Specifications for Construction, Section 904.03.C.
   1. Anionic Emulsified Asphalt SS-1h per Table 904-4.
   2. Cationic Emulsified Asphalt CSS-1h per Table 904-5.

2.2 AGGREGATE MATERIALS

A. Coarse Aggregate: MDOT 2012 Standard Specifications for Construction, Section 902.09.

B. Fine Aggregate: MDOT 2012 Standard Specifications for Construction, Section 902.09.

C. Mineral Filler: MDOT 2012 Standard Specifications for Construction, Section 902.11.

D. Aggregate Blend Requirements for Superpave Mixtures: MDOT Special Provision for Superpave Final Aggregate Blend Requirements; 12SP-902E-03 per Tables 902-5 and 902-6.

2.3 MIXES

A. Use dry material to avoid foaming. Mix uniformly.

B. Asphalt Paving Mixtures:
   1. Superpave Mixtures: Designed and tested in accordance with MDOT 2012 Standard Specifications for Construction, Section 501.
   2. Marshall Mixtures: Designed and tested in accordance with MDOT Special Provision for Marshall Hot Mix Asphalt Mixture; 12SP-501F-01.
   3. Required mixture types for each paving course shall be as specified on Drawings.

2.4 RELEASE AGENTS

A. Use an approved release agent that does not harm the properties of the HMA mixture or the environment. Do not use fuel oil or distillate derivatives.

2.5 SOURCE QUALITY CONTROL

A. Owners Representative will test samples in accordance with Michigan Department of Transportation standards.

PART 3 EXECUTION

3.1 EXAMINATION

A. Section 01 30 00 - Administrative Requirements: Verification of existing conditions before starting work.

B. Verify utilities indicated under paving are installed with excavations and trenches backfilled and compacted.

C. Verify compacted aggregate base is dry and ready to support paving and imposed loads.
1. Proof roll base with heavy, pneumatic-tired rollers in minimum two perpendicular passes to identify soft spots.
2. Remove and replace soft aggregate base as specified in Section 32 11 23.

D. Verify gradients and elevations of base are correct.

E. Verify manhole frames and covers, and water valve boxes are installed in correct position and elevation.

3.2 PREPARATION

A. Saw cut and notch existing paving to permit firm bond between existing and new paving.

3.3 INSTALLATION

A. BOND COAT
1. Apply bond coat ahead of paving operations to allow curing prior to placement of HMA.
2. Uniformly apply bond coat between each layer of asphalt and to the vertical edges of adjacent pavement at a uniform rate not less than 0.10 gallons per square yard.
3. Do not leave pools of bond coat on the surface and do not spray on adjacent pavement surfaces.
4. Apply bond coat to contact surfaces of curbs and gutters.
5. Coat surfaces of manhole, catch basin, and water valve box frames with release agent to prevent bond with asphalt paving. Do not bond coat these surfaces.

B. ASPHALT PAVING
1. Place and roll HMA per MDOT 2012 Standard Specifications for Construction, Sections 501.F. and 501.G.
2. Place asphalt leveling course over asphalt base course.
3. Place asphalt top course over asphalt leveling course.
4. Clean surface and apply bond coat between each successive asphalt course. If successive layers within an asphalt course are placed on different days, clean surface and place bond coat on previously placed layer.
5. Place each asphalt course to compacted thickness indicated on Drawings.
6. Compact each course by rolling to specified density. Do not displace or extrude paving from position. Hand compact in areas inaccessible to rolling equipment.

7. Perform rolling with consecutive passes to achieve even and smooth finish, without roller marks.

3.4 TOLERANCES

A. Section 01 40 00 - Quality Requirements: Tolerances.

B. Flatness: Maximum variation of ⅜ inch for base course, ¼ inch for leveling course, and ⅛ inch for top course measured with 10 foot straight edge per Michigan Test Method 722.

C. Scheduled Compacted Thickness:
1. Base and Leveling Courses: Within ¼ inch.
2. Top Course: Plus ¼ inch, no minus.

D. Variation from Indicated Elevation: Within ¼ inch.

3.5 FIELD QUALITY CONTROL

A. Section 01 40 00 - Quality Requirements: Testing and Inspections by Owner.

B. Owners Representative will perform laboratory testing of samples in accordance with the MDOT HMA Production Manual.

C. Owner's representative will take samples and perform tests, including mat density tests, to verify conformance with specification.

D. Asphalt Paving Mix Temperature: Measure temperature at time of placement.

E. When tests indicate Work does not meet specified requirements, remove work, replace and retest.

3.6 PROTECTION OF FINISHED WORK

A. Section 01 70 00 - Execution and Closeout Requirements: Requirements for protecting finished Work.

B. Immediately after placement, protect paving from mechanical injury for 24 hours or until surface temperature is less than 140 degrees F.

END OF SECTION

SECTION 32 13 13

CONCRETE PAVING

PART 1 GENERAL

1.1 SUMMARY

A. Section Includes:
1. Concrete sidewalks and sidewalk ramps.
2. Concrete curbs, gutters, and combination curb and gutter.
3. Concrete driveway openings.
4. Concrete driveway approaches.
5. Concrete streets.

B. Related Sections:
1. Section 32 11 23 - Subbase Courses
2. Section 32 11 23 - Aggregate Base Courses
3. Section 32 12 16 - Asphalt Paving
4. Section 32 17 23 - Pavement Markings
5. Section 33 05 13 - Public Manholes and Structures

1.2 PRICE AND PAYMENT PROCEDURES - UNIT PRICES

A. Sidewalk, __ inch:
1. Basis of Measurement: Square Foot
2. Basis of Payment: Includes forms, concrete, accessories, placing, joints, finishing, and curing.
3. Basis of Application: This pay item will apply to all concrete sidewalks, exclusive of sidewalk ramps.

B. Sidewalk Ramp, __ inch:
1. Basis of Measurement: Square Foot
   a. Measurement will include flared sides and ramp surface between flared sides.
   b. Measurement will not include the landing at the top of the ramp. The landing at the top of the ramp will be paid for as “Sidewalk, __ inch”.
2. Basis of Payment: Includes forms, concrete, accessories, placing, joints, finishing, and curing.
3. Basis of Application: This pay item will apply to all ADA compliant sidewalk ramps.

C. Sidewalk Edge, Thickened:
1. Basis of Measurement: Foot
2. Basis of Payment: Includes forms, concrete, accessories, placing, joints, finishing, and curing.

3. Basis of Application: This pay item will apply to all thickened edge sidewalks. Thickened edge sidewalks will also be measured and paid for as Sidewalk, __inch.

D. Detectable Warning Surface, Cast Iron (C.I.):
1. Basis of Measurement: Foot, measured along the center line of the 24 inch wide detectable warning surface.
2. Basis of Payment: Includes ADA compliant cast iron detectable warning surfaces on sidewalk ramps.

E. Curb, Conc., Det. __:
1. Basis of Measurement: Foot
2. Basis of Payment: Includes forms, reinforcing, concrete, accessories, placing, joints, finishing, and curing.

F. Curb & Gutter, Conc., Det. __:
1. Basis of Measurement: Foot
2. Basis of Payment: Includes forms, reinforcing, concrete, accessories, placing, joints, finishing, and curing.

G. Driveway Opening, Conc., Det. M:
1. Basis of Measurement: Foot, measured from springline to springline.
2. Basis of Payment: Includes forms, reinforcing, concrete, accessories, placing, joints, finishing, and curing.
3. Basis of Application: This pay item will apply to all driveway openings constructed per Michigan Department of Transportation Standard Plan R-29 Series, Detail M. Driveway openings constructed per Michigan Department of Transportation Standard Plan R-29 Series, Detail L will be measured and paid for as Curb & Gutter, Conc., Det. __.

H. Driveway, Reinf. Conc., __ inch:
1. Basis of Measurement: Square Yard
2. Basis of Payment: Includes forms, reinforcing, concrete, accessories, placing, joints, finishing, and curing.

I. Driveway, Nonreinf. Conc., __ inch:
1. Basis of Measurement: Square Yard
2. Basis of Payment: Includes forms, concrete, accessories, placing, joints, finishing, and curing.

J. Conc. Pavt., Reinf., __ inch:
1. Basis of Measurement: Square Yard
2. Basis of Payment: Includes forms, reinforcing, concrete, accessories, placing, finishing, and curing.

K. Conc. Pavt., Nonreinf., __ inch:
1. Basis of Measurement: Square Yard
2. Basis of Payment: Includes forms, concrete, accessories, placing, finishing, and curing.

L. Conc. Pavt., Nonreinf., __ inch, High Performance:
1. Basis of Measurement: Square Yard
2. Basis of Payment: Includes forms, concrete, accessories, placing, finishing, and curing.
3. Basis of Application: This pay item will apply when Concrete Grade P1M is specified or called for on the Drawings.

M. Conc., Misc.:
1. Basis of Measurement: Cubic Yard
2. Basis of Payment: Includes concrete, accessories, placing, finishing, and curing.
3. Basis of Application: When included on the Bid Form, this pay item will apply for miscellaneous concrete placed without forming. For projects not including this pay item on the Bid Form, all miscellaneous concrete placed without forming will be considered incidental.

N. Conc. Spillway:
1. Basis of Measurement: Cubic Yard
2. Basis of Payment: Includes forms, reinforcing, concrete, accessories, placing, joints, finishing, and curing.

O. Curb Nose:
1. Basis of Measurement: Each, according to the dimensions and details specified on the project plans.
2. Basis of Payment: Includes forms, reinforcing, concrete, accessories, placing, joints, finishing, and curing

P. Joint, Contraction, (type):
1. Basis of Measurement: Foot
2. Basis of Payment: Includes all Work required to provide a complete contraction joint of the type specified according to the detail provided on Plans.
3. Basis of Application: This pay item will apply to all required contraction joints in newly constructed concrete pavements and concrete pavement repairs.

Q. Joint, Expansion, (type):
1. Basis of Measurement: Foot
2. Basis of Payment: Includes all Work required to provide a complete expansion joint of the type specified according to the detail provided on Plans.
3. Basis of Application: This pay item will apply to all required expansion joints in newly constructed concrete pavements and concrete pavement repairs.

R. Lane Ties, Epoxy, Anchored:
1. Basis of Measurement: Each
2. Basis of Payment: Includes drilling and grouting epoxy coated bars at the specified spacing. Includes sawing and joint sealing.
3. Basis of Application: This pay item will apply where called for on the Drawings.

S. Conc. Cold Weather Protection, Curb:
1. Basis of Measurement: Foot

2. Basis of Payment: Includes all Work required to protect concrete curb or curb and gutter from cold temperatures.
3. Basis of Application: This pay item will apply only if included on Bid Form. If not included on the Bid Form, all Work associated with this pay item will be considered incidental and will not be paid for separately.

T. Conc. Cold Weather Protection, Pavement:
1. Basis of Measurement: Square Yard
2. Basis of Payment: Includes all Work required to protect concrete pavements from cold temperatures.
3. Basis of Application: This pay item will apply only if included on Bid Form. If not included on the Bid Form, all Work associated with this pay item will be considered incidental and will not be paid for separately.

U. Conc. Cold Weather Protection, Sidewalk:
1. Basis of Measurement: Square Foot
2. Basis of Payment: Includes all Work required to protect concrete sidewalks from cold temperatures.
3. Basis of Application: This pay item will apply only if included on Bid Form. If not included on the Bid Form, all Work associated with this pay item will be considered incidental and will not be paid for separately.

V. Conc. Cold Weather Protection, Driveway:
1. Basis of Measurement: Square Yard
2. Basis of Payment: Includes all Work required to protect concrete driveways from cold temperatures.
3. Basis of Application: This pay item will apply only if included on Bid Form. If not included on the Bid Form, all Work associated with this pay item will be considered incidental and will not be paid for separately.

1.3 REFERENCES

A. American Concrete Institute:
1. ACI 301 - Specifications for Structural Concrete

B. ASTM International:
1. ASTM A48/A48M - Standard Specification for Gray Iron Castings
2. ASTM A184/A184M - Standard Specification for Fabricated Deformed Steel Bar Mats for Concrete Reinforcement
3. ASTM A185/A185M - Standard Specification for Steel Welded Wire Fabric, Plain, for Concrete Reinforcement
4. ASTM A615/A615M - Standard Specification for Deformed and Plain Billet-Steel Bars for Concrete Reinforcement
5. ASTM A706/A706M - Standard Specification for Low-Alloy Steel Deformed and Plain Bars for Concrete Reinforcement
6. ASTM A775/A775M - Standard Specification for Epoxy-Coated Steel Reinforcing Bars
7. ASTM A884/A884M - Standard Specification for Epoxy-Coated Steel Wire and Welded Wire Reinforcement

8. ASTM A934/A934M - Standard Specification for Epoxy-Coated Prefabricated Steel Reinforcing Bars
9. ASTM C31/C31M - Standard Practice for Making and Curing Concrete Test Specimens in the Field
10. ASTM C39/C39M - Standard Test Method for Compressive Strength of Cylindrical Concrete Specimens
11. ASTM C78/C78M - Standard Test Method for Flexural Strength of Concrete (Using Simple Beam and Third-Point Loading)
12. ASTM C94/C94M - Standard Specification for Ready-Mixed Concrete
13. ASTM C138/C138M - Standard Test Method for Density (Unit Weight), Yield, and Air Content (Gravimetric) of Concrete
14. ASTM C143/C143M - Standard Test Method for Slump of Hydraulic Cement Concrete
15. ASTM C150 - Standard Specification for Portland Cement
16. ASTM C172 - Standard Practice for Sampling Freshly Mixed Concrete
17. ASTM C173/C173M - Standard Test Method for Air Content of Freshly Mixed Concrete by the Volumetric Method
18. ASTM C231 - Standard Test Method for Air Content of Freshly Mixed Concrete by the Pressure Method
19. ASTM C260 - Standard Specification for Air-Entraining Admixtures for Concrete
20. ASTM C293/C293M - Standard Test Method for Flexural Strength of Concrete (Using Simple Beam with Center-Point Loading)
21. ASTM C309 - Standard Specification for Liquid Membrane-Forming Compounds for Curing Concrete
22. ASTM C494/C494M - Standard Specification for Chemical Admixtures for Concrete
23. ASTM C595 - Standard Specification for Blended Hydraulic Cements
24. ASTM C618 - Standard Specification for Coal Fly Ash and Raw or Calcined Natural Pozzolan for Use as a Mineral Admixture in Concrete
25. ASTM C989 - Standard Specification for Ground Granulated Blast-Furnace Slag for Use in Concrete and Mortars
26. ASTM C1017/C1017M - Standard Specification for Chemical Admixtures for Use in Producing Flowing Concrete
27. ASTM C1064/C1064M - Standard Test Method for Temperature of Freshly Mixed Hydraulic-Cement Concrete
28. ASTM C1116 - Standard Specification for Fiber-Reinforced Concrete and Shotcrete
29. ASTM C1260 - Standard Test Method for Potential Alkali Reactivity of Aggregates (Mortar-Bar Method)
30. ASTM C1293 - Standard Test Method for Determination of Length Change of Concrete Due to Alkali-Silica Reaction
31. ASTM C1567 - Standard Test Method for Determining the Potential Alkali-Silica Reactivity of Combinations of Cementitious Materials and Aggregate (Accelerated Mortar-Bar Method)
32. ASTM D1751 - Standard Specification for Preformed Expansion Joint Filler for Concrete Paving and Structural Construction (Nonextruding and Resilient Bituminous Types)

33. ASTM D1752 - Standard Specification for Preformed Sponge Rubber and Cork Expansion Joint Fillers for Concrete Paving and Structural Construction
34. ASTM D5249 - Standard Specification for Backer Material for Use with Cold- and Hot-Applied Joint Sealants in Portland-Cement Concrete and Asphalt Joints
35. ASTM D6690 - Standard Specification for Joint and Crack Sealants, Hot Applied, for Concrete and Asphalt Pavements

C. Concrete Reinforcing Steel Institute:
1. Manual of Standard Practice

D. Michigan Department of Transportation (MDOT):
1. MDOT 2012 Standard Specifications for Construction
2. MDOT Special Provision for Pavement Acceptance for Jointed Plain Concrete Pavement; 12SP-602A-01
3. MDOT Special Provision for Jointing Layout Plan for Portland Cement Concrete Intersections; 12SP-602B-01
4. MDOT Special Provision for High Performance Portland Cement Concrete Pavement (Grade P1M); 12SP-602D-03
5. MDOT Manual for the Michigan Test Methods

1.4 SUBMITTALS

A. Section 01 33 00 - Submittal Procedures: Requirements for submittals.

B. Product Data: Submit pertinent data on reinforcing steel, concrete materials, and accessories.

C. Design Data:
1. Submit concrete mix design for each concrete strength. Submit separate mix designs when admixtures are required for the following:
   a. Hot and cold weather concrete work.
2. Identify mix ingredients and proportions, including admixtures.
3. Identify chloride content of admixtures and whether or not chloride was added during manufacture.

1.5 QUALITY ASSURANCE

A. Qualifications:
1. Manufacturers: Company specializing in manufacturing Products specified in this Section with minimum three years documented experience.
2. Installers: Company specializing in performing work of this Section with minimum three years documented experience.

B. Section 01 40 00 - Quality Requirements: Testing and Inspections by Contractor.

C. Section 01 40 00 – Quality Requirements: Testing and Inspections by Owner.

D. Single Source Responsibility: Furnish cementitious materials from single source throughout the Work.

E. Mixing Plant: Meeting requirements of the National Ready Mixed Concrete Association *Certification of Ready Mixed Concrete Production Facilities Quality Control Manual*.

F. Perform Work in accordance with ACI 301.

G. Perform Work in accordance with Michigan Department of Transportation standards.

1.6 AMBIENT CONDITIONS

A. Do not place concrete when base surface temperature is less than 40 degrees F, or surface is wet or frozen.

PART 2 PRODUCTS

2.1 FORM MATERIALS

A. Form Materials: ACI 301, wood or steel form material, profiled to suit conditions.

2.2 REINFORCING

A. Deformed Reinforcing Steel: ASTM A775/A775M, 60 ksi yield grade, deformed billet-steel bars, epoxy coated finish.

B. Deformed Bar Mats: ASTM A184/A184M; fabricated from deformed billet-steel bars per ASTM A615/A615M or low-alloy steel deformed bars per ASTM A706/A706M; 60 ksi yield strength, steel bars, unfinished.

C. Welded Plain Wire Fabric: ASTM A185/A185M, flat sheets, unfinished.

D. Dowels: Fabricated from ASTM A775/A775M, 60 ksi yield strength, plain steel bars, epoxy coated finish. Cut to length indicated on Drawings, square ends and remove burrs.

E. Tie Wire: Minimum 16 gage annealed type. Use plastic or epoxy coated wire to tie epoxy coated bars.

F. Epoxy Coating Patching Material: Type as recommended by coating manufacturer.

2.3 CONCRETE MATERIALS

A. Cement: ASTM C150, Portland type, gray color.
   1. Type I; Normal.
   2. Type IA; Normal, Air Entraining.
   3. Type II; Moderate Sulfate Resistance.
   4. Type IIA; Moderate Sulfate Resistance, Air Entraining.
   5. Type III; High Early Strength.
   6. Type IIIA; High Early Strength, Air Entraining.

B. Blended Cement: ASTM C595, gray color.

1. Type IS; Portland Blast Furnace Slag Cement.
2. Type IS-A; Portland Blast Furnace Slag Cement, Air Entraining.
3. Type IP; Portland-Pozzolan Cement.
4. Type IP-A; Portland-Pozzolan Cement, Air Entraining.
5. Type IL; Portland-Limestone Cement.
6. Type IL-A; Portland-Limestone Cement, Air Entraining.
7. Type IT; Ternary Blended Cement.
8. Type IT-A; Ternary Blended Cement, Air Entraining.

C. Coarse Aggregates: MDOT 2012 Standard Specifications for Construction, Section 902.03.
   1. Class 4AA, 6AAA, 6AA, 6A, 17A and 26A Course Aggregate per Table 902-1.

D. Fine Aggregates: MDOT 2012 Standard Specifications for Construction, Section 902.08.
   1. Class 2NS, 2SS and 2MS Fine Aggregate per Table 902-4.

E. Fly Ash: ASTM C618, Class C or F.
   1. Loss on ignition shall not exceed 5.0 percent.
   2. Air-entraining admixture uniformity requirement in Table 3 for Supplementary Optional Physical Requirements shall apply.

F. Slag: ASTM C989, Grade 100 or 120 ground granulated blast furnace slag. Use only as a blending material with Type I or IA Portland cement.

G. Concrete Reinforcing Fibers: ASTM C1116, Type III; high strength industrial-grade virgin polypropylene fibers specifically engineered for secondary reinforcement of concrete.
   1. Products:
      a. Nycon, Inc.: MultiMesh.
      b. Substitutions: Section 01 60 00 - Product Requirements: Product Substitution Procedures.
   2. Physical Properties:
      a. Tensile Strength: 44 ksi
      b. Toughness: 28 ksi
      c. Length: ¾ inch.

H. Water: ASTM C94/C94M; potable, without deleterious amounts of chloride ions.

I. Air-Entraining Admixture: ASTM C260.

J. Chemical Admixture: ASTM C494/C494M, with chloride ion content not exceeding 0.5 percent by weight of the mixture.
   1. Type A - Water Reducing.
   2. Type C - Accelerating.
   3. Type D - Water Reducing and Retarding.
   4. Type E - Water Reducing and Accelerating.
   5. Type F - Water Reducing, High Range.
   6. Type G - Water Reducing, High Range and Retarding.

K. Plasticizing Admixture: ASTM C1017/C1017M
   1. Type I, plasticizing.
   2. Type II, plasticizing and retarding.

2.4 ACCESSORIES

A. Curing Compound: ASTM C309, Type 2, Class B.

B. Detectable Warning Plates:
   1. Manufacturers:
      a. East Jordan Iron Works, Inc.
      b. Neenah Foundry Co.
      c. Substitutions: Section 01 16 00 - Product Requirements: Product Substitution Procedures.
   2. ASTM A48/A48M, Class 35B gray cast iron with slip resistant finish and tactile warnings in accordance with the ADA Accessibility Guidelines.
      a. Painting/Coating: None.

C. Joint Filler:
   1. ASTM D1751; Asphalt impregnated fiberboard or felt.
   2. ASTM D1752; Sponge rubber, cork, or self-expanding cork.
   3. Thickness: ½ inch.

D. Joint Sealers: ASTM D6690, Type II or Type III; hot applied type.

E. Backer Rod: ASTM D5249, Type I; closed-cell, cross-linked polyethylene foam rod of diameter and density required to control sealant depth and prevent bottom side adhesion of sealant.

2.5 CONCRETE MIX

A. Mix and deliver concrete in accordance with MDOT 2012 Standard Specifications for Construction, Section 601.

B. Provide concrete mixtures in accordance with MDOT 2012 Standard Specifications for Construction, Table 601-02 or Table 701-1A and 701-1B, as follows:
   1. Sidewalks and Sidewalk Ramps: Grade P1, P2, S2 or S3.
   2. Curbs, Gutters, and Combination Curb and Gutter: Grade P1or S2.
   3. Driveway Approaches: Grade P1, P-NC or S2.
   4. Streets: Grade P1M, P1 or P2.

C. Use accelerating admixtures in cold weather when temperatures are below 40 degrees Fahrenheit. Use of admixtures will not relax cold weather placement requirements.

D. Do not use calcium chloride.

E. Use set retarding admixtures during hot weather when temperatures are above 90 degrees Fahrenheit.

2.6 FABRICATION

A. Fabricate reinforcing in accordance with CRSI Manual of Standard Practice and Michigan Department of Transportation standards.

2.7 SHOP FINISHING - REINFORCING

A. Epoxy Coated Finish for Steel Bars: ASTM A775/A775M or ASTM A934/A934M.

B. Epoxy Coated Finish for Steel Wire: ASTM A884/A884M; Class A.

2.8 SOURCE QUALITY CONTROL AND TESTS

A. Section 01 40 00 - Quality Requirements: Testing and Inspections by Contractor.

B. Submit proposed mix design of each class of concrete for review prior to commencement of Work.

C. Perform tests on cement, aggregates, and mixes to ensure conformance with specified requirements.
   1. Test Alkali-Silica Reactivity (ASR) of fine aggregate per ASTM C1260, ASTM C1293, or ASTM C1567. Use a test laboratory proficient in ASR testing.

D. Test samples in accordance with ASTM C94/C94M.

PART 3 EXECUTION

3.1 EXAMINATION

A. Section 01 30 00 - Administrative Requirements: Verification of existing conditions before starting work.

B. Verify utilities indicated under paving are installed with excavations and trenches backfilled and compacted.

C. Verify compacted subbase or aggregate base is dry and ready to support paving and imposed loads.
   1. Proof roll base with heavy, pneumatic-tired rollers in minimum two perpendicular passes to identify soft spots.
   2. Remove and replace soft aggregate base as specified in Section 32 11 23.

D. Verify gradients and elevations of base are correct.

E. Verify manhole frames and covers, and water valve boxes are installed in correct position and elevation.

3.2 PREPARATION

A. Moisten substrate to minimize absorption of water from fresh concrete.

B. Coat surfaces of manhole, catch basin, and water valve box frames with oil to prevent bond with concrete paving.

C. Notify Engineer minimum 24 hours prior to commencement of concreting operations.

3.3 INSTALLATION

A. Forming:
1. Place and secure forms and screeds to correct location, dimension, profile, and gradient.
2. Assemble formwork to permit easy stripping and dismantling without damaging concrete.

B. Reinforcing:
1. Place reinforcing as indicated on Drawings.
2. Interrupt reinforcing at expansion joints.
3. Place dowels to achieve paving and curb alignment as detailed.
4. Provide doweled joints at transverse joints or interruptions of concrete with one end of dowel set in capped sleeve to allow longitudinal movement.
5. Repair damaged epoxy coating to match shop finish.

C. Placing Concrete:
1. Place concrete in accordance with ACI 301 and Michigan Department of Transportation standards.
2. Ensure reinforcing, inserts, embedded parts, and formed joints are not disturbed during concrete placement.
3. Place concrete continuously over the full width of the panel and between predetermined construction joints. Do not break or interrupt successive pours such that cold joints occur.
4. Embed tactile warning plates in freshly set concrete. Install across full width of sidewalk ramp. Neatly cut plates as necessary to match width and angle of ramp.

D. Joints:
1. Place expansion joints at intervals not exceeding 50 feet for sidewalks, where indicated on Drawings, and where directed by Engineer. Align curb, gutter, and sidewalk joints. Place joint filler for full width and depth of joint. Recess top of filler 5/8 inch below finished surface if joint sealer is required.
2. Place scored or sawed contraction joints at 5 foot intervals for sidewalks, where indicated on Drawings, and where directed by Engineer. Construct contraction joints to a depth equal to at least ¼ of the concrete thickness.
3. Place joint filler between paving components, building, other appurtenances, or where directed by Engineer.
4. Seal joints located in roads, as indicated on Drawings, and where directed by Engineer.

E. Finishing:
1. Sidewalk Paving: Light broom, radius edges to 3/8 inch radius, and trowel joint edges.
2. Curbs and Gutters: Light broom.
3. Driveways: Light broom, perpendicular to slope.
4. Roads: Medium broom, perpendicular to centerline.

F. Curing:
1. Place curing compound on exposed concrete surfaces immediately after finishing.
2. Maintain concrete with minimal moisture loss at relatively constant temperature for period necessary for hydration of cement and hardening of concrete.
3. Cure concrete paving in accordance with MDOT 2012 Standard Specifications for Construction.

G. Cold Weather Protection:
1. Minimum requirement: Cover concrete with insulated blankets when air temperature below 40 degrees Fahrenheit is expected within 24 hours of placement.
2. Additional protection: Prevent concrete temperature from falling below 40 degrees F.

3.4 TOLERANCES

A. Section 01 40 00 - Quality Requirements: Tolerances.

B. Flatness: Maximum variation of ⅛ inch measured with 10 foot straight edge per Michigan Test Method 722.

C. Thickness: Plus ¼ inch, no minus.

D. Maximum Variation from Indicated Elevation: Within ¼ inch.

3.5 FIELD QUALITY CONTROL

A. Section 01 40 00 - Quality Requirements: Testing and Inspections by Owner.

B. Inspect reinforcing placement for size, spacing, location, support.

C. Owner's representative will take samples and performing testing as follows:
1. Field Testing:
a. Slump Test Method: ASTM C143/C143M.
b. Air Content Test Method: ASTM C173/C173M or ASTM C231.
c. Temperature Test Method: ASTM C1064/C1064M.
d. Measure slump and temperature for each compressive strength concrete sample.
e. Measure air content in air entrained concrete for each compressive strength concrete sample.
2. Strength Test Samples:

a. Sampling Procedures: ASTM C172.
b. Cylinder Molding and Curing Procedures: ASTM C31/C31M, cylinder specimens, field cured.
c. Make three cylinders for every 75 cubic yards or less of each Grade of concrete placed each day or as directed by Engineer.
d. Make one additional cylinder during cold weather concreting, and field cure.

3. Cylinder Compressive Strength Testing:
   a. Test Method: ASTM C39/C39M.
   b. Test one cylinder at 7 days.
   c. Test two cylinders at 28 days.
   d. Retain one cylinder for additional testing when requested by Engineer.
   e. Dispose remaining cylinders when testing is not required.
   f. Test Acceptance: Average compressive strength of 28 day cylinders shall not be less than 500 psi below specified compressive strength, for each sample tested.
4. Maintain records of placed concrete items. Record date, location of pour, quantity, air temperature, and test samples taken.

D. When tests indicate Work does not meet specified requirements, remove work, replace and retest.

3.6 PROTECTION OF FINISHED WORK

A. Section 01 70 00 - Execution and Closeout Requirements: Requirements for protecting finished Work.

B. Immediately after placement, protect paving from premature drying, excessive hot or cold temperatures, and mechanical injury.

C. Do not permit vehicular traffic over paving until 75 percent design strength of concrete has been achieved.

3.7 STANDARD DRAWINGS

A. MDOT R-28 Series: Sidewalk Ramp and Detectable Warning Details

B. MDOT R-29 Series: Driveway Openings & Approaches, and Concrete Sidewalk

C. MDOT R-30 Series: Concrete Curb and Concrete Curb & Gutter

END OF SECTION

SECTION 32 17 23

PAVEMENT MARKINGS

PART 1 GENERAL

1.1 SUMMARY

A. Section Includes:
1. Traffic lines and markings.
2. Legends.
3. Symbols.
4. Paint.
5. Glass Beads.

B. Related Sections:
1. Section 32 12 16 - Asphalt Paving
2. Section 32 13 13 - Concrete Paving

1.2 PRICE AND PAYMENT PROCEDURES - UNIT PRICES

A. Pavt. Mrkg., Waterborne, __ inch, (color) :
1. Basis of Measurement: Foot
2. Basis of Payment:
   a. Includes furnishing and installing the first application of waterborne pavement marking lines with glass beads, and related maintenance and protection from traffic.
   b. Payment will not be made for skips in dashed lines.

B. Pavt. Mrkg., Waterborne, 2nd Application, __ inch, (color) :
1. Basis of Measurement: Foot
2. Basis of Payment:
   a. Includes furnishing and installing the second application of waterborne pavement marking lines with glass beads, and related maintenance and protection from traffic.
   b. Payment will not be made for skips in dashed lines.

C. Pavt. Mrkg., Ovly. Cold Plastic, __ inch, Stop Bar:
1. Basis of Measurement: Foot
2. Basis of Payment: Includes furnishing and installing overlay cold plastic pavement marking lines at Stop Bars, adhesives and contact cements, and related maintenance and protection from traffic.

D. Pavt. Mrkg., Ovly. Cold Plastic, __ inch, Crosswalk:
1. Basis of Measurement: Foot
2. Basis of Payment: Includes furnishing and installing overlay cold plastic pavement marking lines at Crosswalks, adhesives and contact cements, and related maintenance and protection from traffic.

E. Pavt. Mrkg., Ovly. Cold Plastic, (legend) :
   1. Basis of Measurement: Each
   2. Basis of Payment: Includes furnishing and installing overlay cold plastic pavement marking legends, adhesives and contact cements, and related maintenance and protection from traffic.

F. Pavt. Mrkg., Ovly. Cold Plastic, (symbol) :
   1. Basis of Measurement: Each
   2. Basis of Payment: Includes furnishing and installing overlay cold plastic pavement marking symbols, adhesives and contact cements, and related maintenance and protection from traffic.

1.3 REFERENCES

A. Abbreviations and Acronyms:
   1. Mrkg: Marking.
   2. Ovly: Overlay.
   3. Pavt: Pavement.

B. Reference Standards:
   1. American Association of State Highway and Transportation Officials (AASHTO):
      a. AASHTO M247 - Standard Specification for Glass Beads Used in Traffic Paint
   2. Michigan Department of Transportation (MDOT):
      a. MDOT 2012 Standard Specifications for Construction
      b. Michigan Manual on Uniform Traffic Control Devices (MUTCD), Current Edition

1.4 SUBMITTALS

A. Section 01 33 00 - Submittal Procedures: Requirements for submittals.

B. Product Data:
   1. Submit paint formulation for each type of paint.
   2. Submit data on cold plastic tape and adhesives.

C. Test Reports: Submit source and acceptance test results in accordance with AASHTO M247.

D. Manufacturer's Installation Instructions: Submit instructions for application temperatures, eradication requirements, application rate, line thickness, type of glass beads, bead embedment and bead application rate, and any other data on proper installation.

E. Manufacturer's Certificate: Certify materials meet or exceed specified requirements.

1.5 QUALITY ASSURANCE

A. Qualifications:
   1. Manufacturers: Company specializing in manufacturing products specified in this section with minimum three years documented experience.
   2. Installers: Company specializing in performing work of this section with minimum three years documented experience.

B. Pavement marking materials shall be lead free and selected from the current Michigan Department of Transportation Qualified Products List.

C. Perform Work in accordance with Michigan Department of Transportation standards.

1.6 DELIVERY, STORAGE, AND HANDLING

A. Section 01 60 00 - Product Requirements: Requirements for delivering, storing, handling and protecting products.

B. Invert containers several days prior to use when paint has been stored more than two months. Minimize exposure to air when transferring paint. Seal drums and tanks when not in use.

C. Glass Beads: Store glass beads in cool, dry place. Protect from contamination by foreign substances.

1.7 AMBIENT CONDITIONS

A. Place pavement markings according to the minimum material placement temperature and seasonal restrictions listed in MDOT 2012 Standard Specifications for Construction, Table 811-2.

B. Do not apply materials when surface and ambient temperatures are outside temperature ranges required by product manufacturer.

C. Do not apply exterior coatings during rain or snow, when relative humidity is outside humidity ranges, or moisture content of surfaces exceed those required by paint product manufacturer.

D. Volatile Organic Content (VOC): Do not exceed State or Environmental Protection Agency maximum VOC on traffic paint.

1.8 WARRANTY

A. Section 01 70 00 - Execution and Closeout Requirements: Requirements for warranties.

B. Furnish one year manufacturer’s warranty for traffic paints.

PART 2 PRODUCTS

2.1 MATERIALS

A. Glass Beads: MDOT Standard Specifications for Construction, Section 920.02.

B. Waterborne Pavement Marking Material: MDOT Standard Specifications for Construction, Section 920.01.
   1. Performance Criteria:
      a. Paint Adhesion: Adhere to road surface forming smooth continuous film one minute after application.
      b. Paint Drying: Tack free by touch so as not to require coning or other traffic control devices to prevent transfer by vehicle tires within two minutes after application.

C. Cold Plastic Pavement Marking Material: MDOT Standard Specifications for Construction, Section 920.01.

PART 3 EXECUTION

3.1 EXAMINATION

A. Section 01 30 00 - Administrative Requirements: Verification of existing conditions before starting work.

B. Verify pavement surface is clean, dry, and ready to receive new pavement markings.

3.2 PREPARATION

A. Maintenance and Protection of Traffic:
   1. Provide short term traffic control in accordance with Section 01 50 00 - Temporary Facilities and Controls.
   2. Prevent interference with marking operations and to prevent traffic on newly applied markings before markings dry.
   3. Maintain travel lanes between 7:00 AM to 9:00 AM, and between 4:00 PM and 6:00 PM.
   4. Maintain access to existing businesses and other properties requiring access.

B. Surface Preparation:
   1. Clean and dry paved surface prior to painting.
   2. Blow or sweep surface free of dirt, debris, oil, grease or gasoline.
   3. Spot location of final pavement markings as specified and as indicated on Drawings by applying pavement spots 25 feet on center.
   4. Notify Engineer after placing pavement spots and minimum three days prior to applying traffic lines.

3.3 PAVEMENT MARKING REMOVAL

A. Remove existing markings in accordance with MDOT 2012 Standard Specifications for Construction, Section 812.03.F. Do not use paint or bituminous bond coat to cover existing pavement markings. Select removal method to minimize damage to the surface texture of pavement during removal. Satisfactorily repair any pavement or surface damage caused by removal methods.

B. Clean and repair existing lines, legends, and symbols to remain as part of the finished Work.

3.4 APPLICATION

A. Install Work in accordance with MDOT 2012 Standard Specifications for Construction, Section 811.03.

3.5 APPLICATION TOLERANCES

A. Section 01 40 00 - Quality Requirements: Tolerances.

B. Maximum Variation from Wet Film Thickness: 1 mil.

C. Maximum Variation from Wet Paint Line Width: Plus or minus 1/8 inch.

D. Maintain cycle length for skip lines at tolerance of plus or minus 6 inches per 40 feet and line length of plus or minus 3 inches per 10 feet.

E. Maximum Variation from Specified Application Temperature: Plus or minus 5 degrees F.

3.6 FIELD QUALITY CONTROL

A. Owner's representative will inspect for incorrect location, insufficient thickness, line width, coverage, retention, uncured or discolored material, and insufficient bonding.

B. Repair lines and markings, which after application and curing do not meet following criteria:
   1. Incorrect Location: Remove and replace incorrectly placed patterns.
   2. Insufficient Thickness, Line Width, Paint Coverage, Glass Bead Coverage or Retention: Prepare defective material by acceptably grinding or blast cleaning to remove substantial amount of beads and to roughen marking surface. Remove loose particles and debris. Apply new markings on cleaned surface in accordance with this Section.
   3. Uncured or Discolored Material, Insufficient Bonding: Remove defective markings in accordance with this Section and clean pavement surface one foot beyond affected area. Apply new markings on cleaned surface in accordance with this Section.

C. Maintain daily log showing work completed, results of above inspections or tests, pavement and air temperatures, relative humidity, presence of any moisture on pavement,

and any material or equipment problems. Make legible entries in log in ink, sign and submit by end of each work day. Enter environmental data into log prior to starting work each day and at two additional times during day.

3.7 PROTECTION OF FINISHED WORK

A. Section 01 70 00 - Execution and Closeout Requirements: Requirements for protecting finished Work.

B. Protect painted pavement markings from vehicular and pedestrian traffic until paint is dry and track free. Follow manufacturer's recommendations or use minimum of 30 minutes. Consider barrier cones as satisfactory protection for materials requiring more than 2 minutes dry time.

END OF SECTION

SECTION 32 91 19

LANDSCAPE GRADING

PART 1 GENERAL

1.1 SUMMARY

A. Section Includes:
1. Topsoil for finish landscaping.
2. Soil testing.

B. Related Sections:
1. Section 31 22 13 - Rough Grading
2. Section 31 23 33 - Trenching and Backfilling
3. Section 32 92 19 - Seeding

1.2 PRICE AND PAYMENT PROCEDURES - UNIT PRICES

A. Topsoil Surface, __inch:
1. Basis of Measurement: Square Yard
2. Basis of Payment: Includes supplying topsoil materials, stockpiling, preparing and scarifying substrate surface, placing where required to the specified depth, and rolling.
3. Basis of Application: This pay item will apply on all projects where included on the Bid Form, generally used when topsoil depth will be constant.

B. Topsoil Surface, __inch, screened:
1. Basis of Measurement: Square Yard
2. Basis of Payment: Includes supplying screened topsoil materials, stockpiling, preparing and scarifying substrate surface, placing where required to the specified depth, and rolling.
3. Basis of Application: This pay item will apply on all projects where included on the Bid Form, generally used when topsoil depth will be constant.

C. Topsoil:
1. Basis of Measurement: Cubic Yard
2. Basis of Payment: Includes supplying topsoil materials, stockpiling, preparing and scarifying substrate surface, placing where required to the specified contour and elevation, and rolling.
3. Basis of Application: This pay item will apply on all projects where included on the Bid Form, generally used when topsoil depth may be variable.

D. Topsoil, screened:
1. Basis of Measurement: Cubic Yard.
2. Basis of Payment: Includes supplying screened topsoil materials, stockpiling, preparing and scarifying substrate surface, placing where required to the specified contour and elevation, and rolling.

3. Basis of Application: This pay item will apply on all projects where included on the Bid Form, generally used when topsoil depth may be variable.

1.3 REFERENCES

A. ASTM International:
1. ASTM D2487 - Standard Practice for Classification of Soils for Engineering Purposes (Unified Soil Classification System)

1.4 SUBMITTALS

A. Section 01 33 00 - Submittal Procedures: Requirements for submittals.

B. Samples: Submit, in air-tight containers, 5 lb sample of topsoil to testing laboratory.

C. Testing Report: Submit to Owner the laboratory testing report with nutrient and pH levels with recommended soil supplements and application rates.

D. Materials Source: Submit source location and names of material suppliers.

1.5 QUALITY ASSURANCE

A. Single Source Responsibility: Furnish topsoil material from single source throughout the Work.

PART 2 PRODUCTS

2.1 MATERIAL

A. Topsoil:
1. Imported borrow.
2. Friable loam, consisting of natural loam, sandy loam, silty loam, or clay loam humus-bearing soils adapted to support plant life.
3. Reasonably free of roots, rocks larger than ½ inch, subsoil, debris, weeds, soil clumps larger than 1 inch, and foreign matter.
   a. Screening: Single screened, where required.
4. Acidity range: pH of 5.5 to 7.5.
5. Containing minimum of 4 percent and maximum of 25 percent organic matter.
6. Conforming to ASTM D2487 Group Symbol PT
7. Limit decaying matter to 5 percent of total content by volume.

2.2 SOURCE QUALITY CONTROL

A. Section 01 40 00 – Quality Requirements: Testing and Inspections by Contractor.

B. Analyze topsoil to ascertain percentage of nitrogen, phosphorus, potash, soluble salt content, organic matter content, and pH value.

C. Provide recommendation for fertilizer and lime application rates for specified seed mix as result of testing.

D. Testing is not required when recent tests and certificates are available for imported topsoil. Submit these test results to testing laboratory. Indicate, by test results, information necessary to determine suitability.

PART 3 EXECUTION

3.1 EXAMINATION

A. Section 01 30 00 - Administrative Requirements: Verification of existing conditions before starting work.

B. Verify all utility construction is complete.

C. Verify substrate base has been contoured and compacted. Verify that substrate contours will provide positive drainage of finished topsoil grade.

3.2 PREPARATION

A. Protect landscaping and other features remaining as final Work.

B. Protect existing structures, fences, sidewalks, utilities, paving, and curbs.

C. Eliminate uneven areas and low spots.

D. Remove debris, roots, branches, and stones in excess of ½ inch in size. Remove contaminated subsoil.

E. Scarify surface to depth of 3 inches where topsoil is scheduled. Scarify in areas where equipment used for hauling and spreading topsoil has compacted subsoil.

3.3 PLACING TOPSOIL

A. Place topsoil in areas where seeding is required to nominal depth shown on the Drawings. Place topsoil during dry weather.

B. Fine grade topsoil to eliminate rough or low areas. Maintain profile and contour of subgrade.

C. Remove roots, weeds, rocks, and foreign material while spreading.

D. Manually spread topsoil close to plant material, buildings, and fences to prevent damage.

E. Lightly compact placed topsoil with smooth roller not exceeding 100 lbs per linear foot.

F. Remove surplus subsoil and topsoil from site.

G. Leave stockpile area and site clean and raked, ready to receive landscaping.

3.4 TOLERANCES

A. Section 01 40 00 - Quality Requirements: Tolerances.

B. Thickness: Plus or minus ½ inch.

C. Maximum Variation from Indicated Elevation: Within 3 inches.

3.5 PROTECTION OF FINISHED WORK

A. Section 01 70 00 - Execution and Closeout Requirements: Requirements for protecting finished Work.

B. Prohibit construction traffic over topsoil.

END OF SECTION

SECTION 32 92 19

SEEDING

PART 1 GENERAL

1.1 SUMMARY

A. Section Includes:
1. Fertilizing.
2. Seeding.
3. Mulching.
4. Watering.
5. Mowing.
6. Weed Control.
7. Maintenance.

B. Related Sections:
1. Section 32 91 19 - Landscape Grading

1.2 PRICE AND PAYMENT PROCEDURES - UNIT PRICES

A. Seed & Fertilizer:
1. Basis of Measurement: Square Yard
2. Basis of Payment: Includes supplying seed and fertilizer, spreading, applying, rolling, and raking.

B. Mulch Blanket:
1. Basis of Measurement: Square Yard
2. Basis of Payment: Includes supplying mulch blanket, installation, staking, and light topsoil dressing.

C. Mulch Blanket, High Velocity:
1. Basis of Measurement: Square Yard
2. Basis of Payment: Includes supplying mulch blanket, installation, staking, and light topsoil dressing.

D. Water, Seeding:
1. Basis of Measurement: Unit (1,000 gallons)
2. Basis of Payment: Includes watering of seeded areas to aid in seed germination and growth.

E. Mowing:
1. Basis of Measurement: Square Yard
2. Basis of Payment: Includes mowing, trimming, removing clippings, and repairing damage.
3. Basis of Application: This pay item will apply for each mowing.

F. Weed Control:
1. Basis of Measurement: Square Yard
2. Basis of Payment: Includes supplying herbicide to control the growth of weeds and applying at the appropriate rate.

1.3 REFERENCES

A. Definitions:
1. Weeds: Any plant species other than the specified species, including but not limited to Dandelion, Jimsonweed, Quackgrass, Horsetail, Morning Glory, Rush Grass, Mustard, Lambsquarter, Chickweed, Cress, Crabgrass, Canadian Thistle, Nutgrass, Poison Oak, Blackberry, Tansy Ragwort, Bermuda Grass, Johnson Grass, Poison Ivy, Nut Sedge, Nimble Will, Bindweed, Bent Grass, Wild Garlic, Perennial Sorrel, and Brome Grass.

B. Reference Standards:
1. ASTM International:
a. ASTM C602 - Standard Specification for Agricultural Liming Materials

1.4 SUBMITTALS

A. Section 01 33 00 - Submittal Procedures: Requirements for submittals.

B. Product Data: Submit pertinent data for seed mix, fertilizer, mulch blanket, and other accessories.

C. Manufacturer’s Installation Instructions:
1. Indicate special procedures required to install Products specified.

D. Manufacturer's Certificate: Certify materials and products meet or exceed specified requirements.

1.5 CLOSEOUT SUBMITTALS

A. Section 01 70 00 - Execution and Closeout Requirements: Requirements for submittals.

B. Operation and Maintenance Data: Include maintenance instructions, cutting method and maximum grass height, types, application frequency, and recommended coverage of fertilizer.

C. Submit recommended type, application frequency, and recommended coverage of fertilizer.

1.6 QUALITY ASSURANCE

A. Qualifications:
1. Seed Supplier: Company specializing in manufacturing products specified in this section with minimum three years documented experience.

2. Installer: Company specializing in performing work of this section with minimum three years documented experience, approved by Owner.
3. Herbicide Applicator: Individual licensed in the State of Michigan and certified by the Michigan Department of Agriculture in the required category.

B. Certifications: Provide seed mixture in containers showing percentage of seed mix, germination percentage, inert matter percentage, weed percentage, year of production, net weight, date of packaging, and location of packaging.

C. Single Source Responsibility: Furnish each product from single source throughout the Work.

1.7 DELIVERY, STORAGE, AND HANDLING

A. Section 01 60 00 - Product Requirements: Product Delivery Requirements.

B. Deliver grass seed mixture in sealed containers. Seed in damaged packaging is not acceptable.

C. Deliver fertilizer in waterproof bags showing weight, chemical analysis, and name of manufacturer.

1.8 AMBIENT CONDITIONS

A. Place permanent seed from April 15 through October 10.

B. Place dormant seed after November 15, but not on frozen ground.

PART 2 PRODUCTS

2.1 SEED MIXTURE

A. Seed Mixture:

Species	Minimum Purity (%)	Germination (%)	Mixture Proportions (% by weight)
Kentucky Blue Grass	98	85	10
Perennial Ryegrass	96	85	20
Hard Fescue	97	85	20
Creeping Red Fescue	97	85	40
Fults Salt Grass	98	85	10

2.2 ACCESSORIES

A. Mulching Material: Oat or wheat straw, free from weeds, foreign matter detrimental to plant life, and dry. Hay or chopped cornstalks are not acceptable.

B. Fertilizer: Commercial grade; recommended for grass; of proportion necessary to eliminate deficiencies of topsoil according to soil analysis. When soil analysis is not available, use a water soluble fertilizer containing a 1:1:1 ratio of nitrogen, phosphorous, and potassium nutrient. Ensure fertilizer components include urea, diammonium phosphate, and potassium chloride.

C. Lime: ASTM C602, Class T or Class O agricultural limestone containing a minimum 80 percent calcium carbonate equivalent.

D. Water: Clean, fresh and free of substances or matter capable of inhibiting vigorous growth of grass.

E. Mulch Blanket: 100 percent straw fiber matrix stitched with biodegradable thread to a biodegradable natural fiber top net.
   1. Products:
      a. North American Green: S75BN.
      b. Substitutions: Section 01 60 00 - Product Requirements: Product Substitution Procedures.

F. Mulch Blanket, High Velocity: 70 percent straw/30 percent coconut fiber matrix stitched with biodegradable thread to biodegradable natural fiber top and bottom nets.
   1. Products:
      a. North American Green: SC150BN.
      b. Substitutions: Section 01 60 00 - Product Requirements: Product Substitution Procedures.

G. Herbicide: Suitable for elimination of weeds and harmless to grass species specified.

H. Stakes:
   1. As recommended by mulch blanket manufacturer for site conditions.
   2. Biodegradable materials only, metal stakes prohibited.

PART 3 EXECUTION

3.1 EXAMINATION

A. Section 01 30 00 - Administrative Requirements: Verification of existing conditions before starting work.

B. Verify utility work and improvements are complete.

C. Verify mailbox relocation is complete.

D. Verify prepared topsoil is ready to receive the Work of this section.

3.2 FERTILIZING

A. Apply lime at application rate recommended by soil analysis. Work lime into top 4 inches of soil.

B. Apply fertilizer at application rate recommended by soil analysis. When soil analysis is not available, apply fertilizer at the required rate to provide 48 pounds of nitrogen, 48 pounds of phosphorus, and 48 pounds of potassium nutrient per acre.
   1. Apply after smooth raking of topsoil and prior to roller compaction.
   2. Do not apply fertilizer at same time or with same machine used to apply seed.

C. Mix fertilizer thoroughly into upper 2 inches of topsoil.

D. Lightly water soil to aid dissipation of fertilizer. Irrigate top level of soil uniformly.

3.3 SEEDING

A. Apply seed at rate of 5 lbs per 1000 sq ft evenly in two intersecting directions. Rake in lightly.
   1. Do not seed areas in excess of that which can be mulched on same day.
   2. Do not sow immediately following rain, when ground is too dry, or when winds are over 12 mph.

B. Roll seeded area with roller not exceeding 112 lbs. per linear foot.

C. Immediately following seeding and compacting, install mulch blanket. Maintain clear of shrubs and trees.

D. Apply water with fine spray immediately after each area has been mulched. Saturate to 4 inches of soil.

3.4 SEED PROTECTION

A. Cover seeded areas with mulch blanket. Use mulch blanket for slopes 1 vertical to 4 horizontal or flatter. Use mulch blanket, high velocity for slopes steeper than 1 vertical to 4 horizontal and for open channels.
   1. Roll fabric onto surface without stretching or pulling.
   2. Cut to fit irregular shapes.

B. Install mulch blanket or mulch blanket, high velocity on slopes as follows:
   1. Roll fabric horizontally across slope, beginning at top of slope.
   2. Lay fabric smoothly on surface, bury top end of each section in 6 inch deep by 6 inch wide excavated topsoil trench.
   3. Backfill trench and rake smooth, level with adjacent soil. Apply additional seed as needed. Fold back 12 inch width of fabric over top of excavated trench.
   4. Overlap edges and ends of adjacent rolls minimum 12 inches. Overlap edge of higher roll over edge of lower roll.

5. Secure with stakes in pattern recommended by manufacturer.
6. Follow manufacturer's written instructions during placement and staking of mulch blanket.

C. Install mulch blanket, high velocity in channels as follows:
1. Roll fabric longitudinally along channel, beginning at top of slope.
2. Lay fabric smoothly on surface, bury top of each section on each side of channel in 6 inch deep by 6 inch wide excavated topsoil trench.
3. Backfill trench and rake smooth, level with adjacent soil. Apply additional seed as needed. Fold back 12 inch width of fabric over top of excavated trench.
4. Overlap edges and ends of adjacent rolls minimum 12 inches. Overlap edge of higher roll over edge of lower roll. Overlap rolls in direction of flow with upstream end over downstream end.
5. Secure with stakes in pattern recommended by manufacturer.
6. Follow manufacturer's written instructions during placement and staking of mulch blanket.

D. Lightly dress with topsoil to ensure close contact between mulch blanket and soil.

3.5 WATERING

A. Apply water in the amount directed by Engineer, within 24 hours after receiving Engineer's direction. Water to prevent grass from drying out.

B. Apply water slowly, at a rate that does not displace seed, fertilizer, soil or mulching materials.

C. Repair all damage caused by excessive application rate or by watering equipment.

3.6 MOWING

A. Mow grass within 3 days when directed by Engineer.

B. Do not perform first mowing until seedlings are 40 percent higher than desired height.

C. Do not mow when mowing equipment will damage soil, turf, or mulching materials.

D. Mow grass to a maximum height of 2½ inches or as directed by Engineer. Do not cut more than ⅓ of grass blade height.

E. Neatly trim edges and hand clip where necessary

F. Remove clippings.

G. Repair damage caused by mowing.

3.7 WEED CONTROL

A. Obtain Engineer's approval of the name and application rate of the herbicide before applying.

B. Comply with all local, state, and federal requirements.

C. Apply herbicide over newly established turf areas to control the growth of weeds where directed by Engineer. Do not apply herbicide before grass seedlings have grown to a sufficient maturity to withstand the herbicide.

D. Remedy damage resulting from improper use of herbicides.

3.8 CORRECTIVE MAINTENANCE

A. Examine newly establishing turf areas at regular intervals until final acceptance. Inspect for erosion, loose mulch blankets, weeds, uneven soil and depressions, dry soil conditions, and areas of below average growth.

B. Immediately correct erosion and uneven soil by installing additional topsoil and regrading. Apply fertilizer, seed, and mulch blankets to regraded areas.

C. Immediately correct loose mulch blankets by adding stakes or lightly dressing with topsoil as directed by Engineer. Ensure close contact between mulch blankets and soil as turf develops.

D. Immediately correct areas of below average growth by reseeding as directed by Engineer.

E. Pay cost of all corrective maintenance. Corrective maintenance will not be paid for by Owner.

END OF SECTION

SECTION 33 01 30.13

SEWER AND MANHOLE TESTING

PART 1 GENERAL

1.1 SUMMARY

A. Section Includes:
1. Testing Gravity Sewer Piping:
   a. Low-pressure Air Test.
2. Deflection Testing of Plastic Piping.
3. Testing Manholes:
   a. Vacuum Test.

B. Related Sections:
1. Section 33 01 30.16 - TV Inspection of Sewer Pipelines
2. Section 33 05 13 - Public Manholes and Structures
3. Section 33 31 13 - Public Sanitary Utility Sewerage Piping
4. Section 33 31 13 - Public Storm Utility Drainage Piping

1.2 PRICE AND PAYMENT PROCEDURES - UNIT PRICES

A. Sewer and Manhole Testing:
1. Basis of Measurement: Not applicable.
2. Basis of Payment: Payment for sewer and manhole testing will be included in the price of constructing the sewer or manhole.

1.3 REFERENCES

A. ASTM International:
1. ASTM C1244 – Standard Test Method for Concrete Sewer Manholes by the Negative Air Pressure (Vacuum) Test Prior to Backfill.
2. ASTM D2122 - Test Method for Determining Dimensions of Thermoplastic Pipe and Fittings
3. ASTM F1417 - Standard Test Method for Installation Acceptance of Plastic Gravity Sewer Lines Using Low-Pressure Air

1.4 SUBMITTALS

A. Section 01 33 00 - Submittal Procedures: Requirements for submittals.

B. Submit the following prior to start of testing:
1. Testing procedures.
2. List of test equipment.
3. Testing sequence schedule.
4. Provisions for disposal of flushing and test water.
5. Certification of test gauge calibration.

6. Deflection mandrel drawings and calculations.

1.5 CLOSEOUT SUBMITTALS

A. Test Reports: Submit reports indicating field tests made and results indicating conformance or non-conformance with specifications.

1.6 QUALITY ASSURANCE

A. Section 01 40 00 - Quality Requirements: Testing and Inspections by Contractor.

PART 2 PRODUCTS

2.1 VACUUM TESTING EQUIPMENT

A. Vacuum pump.

B. Vacuum line.

C. Vacuum tester base with compression band seal and outlet port.

D. Shut-off valve.

E. Stop watch.

F. Plugs.

G. Vacuum gauge, calibrated to 0.1 inch Hg.

2.2 AIR TEST EQUIPMENT

A. Air compressor.

B. Air supply line.

C. Shut-off valves.

D. Pressure regulator.

E. Pressure relief valve.

F. Stop watch.

G. Plugs.

H. Pressure gauge, calibrated to 0.1 psi.

2.3 DEFLECTION TEST EQUIPMENT

A. Go, No-Go mandrels.

B. Pull/retrieval ropes.

PART 3 EXECUTION

3.1 EXAMINATION

A. Section 01 30 00 - Administrative Requirements: Verification of existing conditions before starting work.

B. Verify manholes and piping are ready for testing.

C. Verify trenches are backfilled.

3.2 PREPARATION

A. Lamping:
1. Lamp gravity piping after flushing and cleaning.
2. Perform lamping operation by shining light at one end of each pipe section between manholes. Observe light at other end. Reject pipe not installed with uniform line and grade. Remove and reinstall rejected pipe sections. Re-clean and lamp until pipe section achieves uniform line and grade.

B. Plug outlets, wye-branches and laterals; brace plugs to resist test pressures.

3.3 FIELD QUALITY CONTROL

A. Section 01 40 00 - Quality Requirements: Testing and Inspections by Contractor.

B. Low-pressure air testing of gravity sewer piping, deflection testing of plastic sewer piping, and vacuum testing of manholes is not required for sanitary sewer pipes and manholes placed into active service at the time of installation.

C. Vacuum testing of manholes is not required for Storm Manholes and Catch Basins.

D. Low-pressure air testing of gravity sewer piping is not required for Public Storm Utility Drainage Piping.

E. Testing Gravity Sewer Piping:
1. Low-pressure Air Test:
a. Test each section of gravity sewer piping between manholes in accordance with ASTM F1417.
b. Introduce air pressure slowly to approximately 4 psig.
1) Determine ground water elevation above spring line of pipe. For every foot of ground water above spring line of pipe, increase

starting air test pressure by 0.43 psig; do not increase pressure above 10 psig.

c. Allow pressure to stabilize for at least five minutes. Adjust pressure to 3.5 psig or increased test pressure as determined above when ground water is present. Disconnect air supply and start test.

d. Test:

1) Calculate shortest test time allowed for the air pressure to drop 1.0 psig using the following formula; do not make allowance for laterals:

T = 0.085 DK/Q
T = shortest time allowed for the air pressure to drop 1.0 psig, in seconds
K = 0.000419 DL but not less than 1.0
Q = leakage rate in cubic feet per minute per square feet of internal surface = 0.0015 CFM per sq ft
D = measured average inside diameter or sewer pipe, in inches, per ASTM D2122
L = length of test section, in feet

2) Record drop in pressure during test period; when air pressure has dropped more than 1.0 psig during test period, piping has failed; when 1.0 psig air pressure drop has not occurred during test period, discontinue test and piping is accepted.

3) When piping fails, determine source of air leakage, make corrections and retest. Test section in incremental stages until leaks are isolated. After leaks are repaired, retest entire section between manholes.

F. Deflection Testing of Plastic Sewer Pipe:

1. Perform vertical ring deflection testing on PVC and ABS sewer piping, after backfill has been in place for at least 30 days, but not longer than 12 months.
2. Allowable maximum deflection for installed plastic sewer pipe is limited to 5 percent of original internal diameter.
3. Perform deflection testing using properly sized rigid ball or 'Go, No-Go' mandrel.
4. Furnish rigid ball or mandrel with diameter not less than 95 percent of base or average inside diameter of pipe as determined by ASTM standard to which pipe is manufactured. Measure pipe in compliance with ASTM D2122.
5. Perform test without mechanical pulling devices.
6. Locate, excavate, replace and retest pipe exceeding allowable deflection.

G. Testing Manholes:

1. General: Test using air whenever possible prior to backfilling to assist in locating leaks. Make joint repairs on both outside and inside of joint to ensure permanent seal. Test manholes with manhole frame set in place.
2. Vacuum test in accordance with ASTM C1244 and as follows:

a. Plug pipe openings; securely brace plugs and pipe.

b. Inflate compression band to effect seal between vacuum base and structure; connect vacuum pump to outlet port with valve open; draw vacuum to 10 inches of Hg; close valve; start test.

c. Test:

1) Determine test duration for manhole from the following table:

Manhole Diameter	Test Period
4 feet	60 seconds
5 feet	75 seconds
6 feet	90 seconds

2) Record vacuum drop during test period; when vacuum drop is greater than 1 inch of Hg during test period, repair and retest manhole; when vacuum drop of 1 inch of Hg does not occur during test period, discontinue test and accept manhole.

3) When manhole fails, determine source of air leakage, make corrections and retest.

END OF SECTION

SECTION 33 05 13

PUBLIC MANHOLES AND STRUCTURES

PART 1 GENERAL

1.1 SUMMARY

A. Section Includes:
1. Modular precast concrete manholes and structures with tongue-and-groove joints with precast concrete transition to cover frame.
2. Manhole and structure frames and covers.
3. Manhole and structure accessories.
4. Bedding material.

B. Related Sections:
1. Section 31 10 00 - Site Clearing and Removals
2. Section 31 23 33 - Trenching and Backfilling
3. Section 32 01 16 – Flexible Paving Rehabilitation
4. Section 32 12 16 - Asphalt Paving
5. Section 32 13 13 - Concrete Paving
6. Section 33 01 30.13 - Sewer and Manhole Testing
7. Section 33 11 13 - Public Water Utility Distribution Piping
8. Section 33 31 13 - Public Sanitary Utility Sewerage Piping
9. Section 33 41 13 - Public Storm Utility Drainage Piping
10. Section 33 46 16 - Subdrainage Piping

1.2 PRICE AND PAYMENT PROCEDURES - UNIT PRICES

A. Structure, San. MH, __ inch Dia.:
1. Basis of Measurement: Each
2. Basis of Payment: Includes excavation, all required components and accessories, connecting and sealing all pipe entries, flow channel, trenching, bedding, backfilling, compaction, and testing.
3. Basis of Application: This pay item will apply to all sanitary sewer manholes with a total depth of up to 15 feet, measured from the finished rim elevation to the deepest invert.

B. Structure, San. MH, __ inch Dia., over 15 feet deep:
1. Basis of Measurement: Each
2. Basis of Payment: Basis of Payment: Includes excavation, all required components and accessories, connecting and sealing all pipe entries, flow channel, trenching, bedding, backfilling, compaction, and testing.
3. Basis of Application: This pay item will apply to all sanitary sewer manholes with a total depth over 15 feet, measured from the finished rim elevation to the deepest invert.

C. Structure, Stm. MH, __ inch Dia.:
   1. Basis of Measurement: Each
   2. Basis of Payment: Includes excavation, all required components and accessories, connecting and sealing all pipe entries, trenching, bedding, backfilling, compaction, and testing.
   3. Basis of Application: This pay item will apply to all storm sewer manholes with a total depth of up to 15 feet, measured from the finished rim elevation to the deepest invert.

D. Structure, Stm. MH, __ inch Dia., over 15 feet deep:
   1. Basis of Measurement: Each
   2. Basis of Payment: Includes excavation, all required components and accessories, connecting and sealing all pipe entries, trenching, bedding, backfilling, compaction, and testing.
   3. Basis of Application: This pay item will apply to all storm sewer manholes with a total depth over 15 feet, measured from the finished rim elevation to the deepest invert.

E. Structure, Stm. Leaching MH, __ inch Dia.
   1. Basis of Measurement: Each
   2. Basis of Payment: Includes excavation, all required components and accessories, connecting and sealing all pipe entries, trenching, bedding, backfilling, compaction, and testing.
   3. Basis of Application: This pay item will apply to all storm sewer leaching basin manholes.

F. Structure, Stm. CB, __ inch Dia.:
   1. Basis of Measurement: Each
   2. Basis of Payment: Includes excavation, all required components and accessories, connecting and sealing all pipe entries, sump, trenching, bedding, backfilling, compaction, and testing.

G. Structure, Valve Vault, __ inch, Dia.:
   1. Basis of Measurement: Each
   2. Basis of Payment: Includes excavation, all required components and accessories, connecting and sealing all pipe entries, trenching, bedding, backfilling, compaction, and testing.
   3. Basis of Application: This pay item will apply to all manholes for water utility distribution air release valves or sanitary utility sewerage force main air/vacuum valves.

H. Structure, Conn. to Ex. Sewer, __ inch:
   1. Basis of Measurement: Each
   2. Basis of Payment: Includes pipe, fittings and accessories, trenching, bedding, backfilling and compacting.
   3. Basis of Application: This pay item will apply where new structures are connected to existing sewers. Where this pay item is used, the pipe used in making the connection will not be paid for separately but will be included in the

payment for this item. Where more than one existing sewer is connected to a new structure, each connection will be paid for separately.

I. Structure Cover, (type) :
   1. Basis of Measurement: Each
   2. Basis of Payment: Includes adjusting rings, frame, cover, accessories, installation, adjusting, and patching the pavement base course with concrete.
   3. Basis of Application: This pay item will apply to all cast iron covers used on storm sewer catch basins and manholes, sanitary sewer manholes, and water utility manholes.

J. Structure Tap, __ inch, (Utility) :
   1. Basis of Measurement: Each
   2. Basis of Payment: Includes cutting or coring, removing portions of existing structures, and making connection of new sewer to an existing structure.
   3. Basis of Application: This pay item will apply to each connection of a new sewer to an existing structure.

K. Structure, Inside Drop:
   1. Basis of Measurement: Each
   2. Basis of Payment: Includes plastic composite collection device, stainless steel clamping brackets, plastic pipe and fittings, and anchoring hardware.

L. Structure, Outside Drop
   1. Basis of Measurement: Each
   2. Basis of Payment: Includes plastic pipe and fittings, bedding, trenching, backfilling and compacting.

1.3 REFERENCES

A. Abbreviations and Acronyms:
   1. MH: Manhole
   2. CB: Catch Basin

B. Reference Standards:
   1. American Association of State Highway and Transportation Officials:
      a. AASHTO M306 - Standard Specification for Drainage, Sewer, Utility, and Related Castings
   2. ASTM International:
      a. ASTM A48/A48M - Standard Specification for Gray Iron Castings
      b. ASTM A536 - Standard Specification for Ductile Iron Castings
      c. ASTM C55 - Standard Specification for Concrete Building Brick
      d. ASTM C117 - Standard Test Method for Materials Finer than 75-µm (No. 200) Sieve in Mineral Aggregates by Washing
      e. ASTM C136 - Standard Test Method for Sieve Analysis of Fine and Coarse Aggregates
      f. ASTM C443 - Standard Specification for Joints for Concrete Pipe and Manholes, Using Rubber Gaskets

g. ASTM C478 - Standard Specification for Circular Precast Reinforced Concrete Manhole Sections
h. ASTM C497 - Standard Test Methods for Concrete Pipe, Manhole Sections, or Tile
i. ASTM C877 - Standard Specification for External Sealing Bands for Concrete Pipe, Manholes, and Precast Box Sections
j. ASTM C920 - Standard Specification for Elastomeric Joint Sealants
k. ASTM C923 - Standard Specification for Resilient Connectors Between Reinforced Concrete Manhole Structures, Pipes, and Laterals
l. ASTM C1107 - Standard Specification for Packaged Dry, Hydraulic-Cement Grout (Nonshrink)
m. ASTM D1227 - Standard Specification for Emulsified Asphalt Used as a Protective Coating for Roofing
n. ASTM D1557 - Standard Specification for Laboratory Compaction Characteristics of Soil Using Modified Effort (56,000 ft-lbf/ft3)

3. Michigan Department of Transportation (MDOT):
   a. MDOT 2012 Standard Specifications for Construction
   b. MDOT Density Testing and Inspection Manual, Current Edition

1.4 SUBMITTALS

A. Section 01 33 00 - Submittal Procedures: Requirements for submittals.

B. Shop Drawings: Indicate structure locations, elevations, piping, sizes and elevations of penetrations, and configuration of precast components. Provide drawings for each precast structure.

C. Product Data: Submit pertinent data showing component construction, features, configuration, and dimensions for all manhole and structure components including the following:
   1. Frames and covers.
   2. Access steps.
   3. Accessories.

D. Manufacturer's Certification: Certify products meet or exceed specified requirements.

1.5 CLOSEOUT SUBMITTALS

A. Test Reports: Submit reports indicating field tests made and results indicating conformance or non-conformance with specifications.

1.6 QUALITY ASSURANCE

A. Qualifications:
   1. Manufacturers: Company specializing in manufacturing products specified in this section.
   2. Installers: Company specializing in performing work of this section with minimum three years documented experience.

B. Perform Work in accordance with National Precast Concrete Association Quality Control Manual for Precast and Prestressed Concrete Plants.

C. Preconstruction Testing:
1. Section 01 40 00 - Quality Requirements: Testing and Inspections by Owner.
2. Notify Engineer minimum two weeks prior to scheduled delivery of bedding material.
3. Allow Owner's representative access to bedding material source for sampling and testing.
4. Confirm test results indicate conformance with specifications prior to delivery to site.
5. Owner reserves the right to collect and test additional samples of bedding material after delivery to site.

D. Single Source Responsibility: Furnish precast concrete utility structures and bedding material from single source throughout the Work.

1.7 DELIVERY, STORAGE AND HANDLING

A. Section 01 60 00 - Product Requirements: Product storage and handling requirements.

B. Comply with precast concrete manufacturer's instructions for unloading, storing and moving precast manholes and structures.

C. Do not deliver products until concrete has cured 5 days or attained minimum of 75 percent of specified 28 day compressive strength.

D. Do not place precast concrete structures on private property or in areas obstructing pedestrian or vehicle traffic

E. Store precast concrete manholes and structures to prevent damage to Owner's property or other public or private property. Repair property damaged from materials storage.

F. Mark each precast structure by indentation or waterproof paint showing date of manufacture, manufacturer, and identifying symbols and numbers shown on Drawings to indicate its intended use.

PART 2 PRODUCTS

2.1 MANHOLES AND STRUCTURES

A. Manufacturers:
1. Grand Valley Concrete Products.
2. Northern Concrete Pipe, Inc.
3. Upper Peninsula Concrete Pipe Company, Inc.
4. Substitutions: Section 01 60 00 - Product Requirements.

B. Manhole and Structure Sections: Reinforced precast concrete in accordance with ASTM C478 with lipped male/female joints and provision for rubber gaskets.
   1. Shape: Cylindrical
   2. Clear Inside Dimensions: As indicated on Drawings.
   3. Design Depth: As indicated on Drawings.
   4. Pipe Entry: Furnish openings as indicated on Drawings and as required for all pipe connections.
   5. Steps: 10 inches wide, 16 inches on center vertically, cast or inserted into structure wall. Distance from cover opening to first step shall not exceed 24 inches.
   6. Structure Joint Gaskets: ASTM C443, rubber compression gasket.
   7. Top Bearing Surface Diameter: Outside diameter no smaller than outside diameter of adjusting rings.
   8. Top Bearing Surface Width: Minimum 6 inches continuous width around circumference of adjusting rings.
   9. Wall Thickness: Sufficient to provide required top bearing surface and in accordance with ASTM C478.

C. COMPONENTS
   1. Base Slab: Reinforced precast concrete with outside diameter 12 inches larger than riser section outside diameter.
   2. Integral Base Section: Reinforced precast concrete with integral reinforced precast concrete base, lipped male joint, sleeved to receive pipe sections. For structures over 15 feet deep, integral base shall have and outside diameter 12 inches larger than riser section outside diameter.
      a. Sanitary Manholes: Provide precast concrete flow channel sloped in direction of flow.
         1) Flow Channel Slope: 2.5% minimum.
         2) Flow Channel Width: Match outlet sewer diameter.
         3) Flow Channel Depth: 75% of outlet sewer diameter.
         4) Bench Slope: 4% minimum.
      b. Catch Basins: Provide sump with minimum depth of 2 feet measured from lowest pipe invert to structure floor.
   3. Riser Sections: Reinforced precast concrete, lipped male/female joints, sleeved to receive pipe sections.
   4. Top Section: Reinforced precast concrete, lipped female joint. Provide eccentric cone wherever possible. Use flat top with eccentric opening if depth of cover to highest pipe opening is less than 4 feet.
      a. Opening Size and Shape: 24-inch diameter. For catch basins with rectangular grate, opening shall be 2 feet wide by approximately 3 feet long with 6 inch radius curved corners and centered in flat top.
   5. Component Selection:
      a. Pipe sleeves shall be a minimum of 6 inches from joints between sections.
      b. Top of precast shall be no more than 16 inches below finished rim elevation.

6. Manhole and Structure Steps: Polypropylene plastic step with 1/2 inch steel reinforcement designed to prevent slippage off step. Required for all structures with 48 inch or larger inside diameter.

2.2 FRAMES AND COVERS

A. Products:
1. EJ Group, Inc.:
   a. Manholes and Valve Vaults: Model 1040 with Type A Solid Cover. Include closed pick slot and imprinted City of South Haven name, logo, and type of utility.
   b. Catch Basins:
      1) Located in Curb Line: Model 7045 with Type M1 sinusoidal grate and Type T1 back or Model 7030 with Type M2 grate and Type T1 back as indicated on Drawings. Imprinted with "Dump No Waste" on curb back.
      2) Located in Center of Pavement: Model 5100 with Type M1 sinusoidal grate. Imprinted with "Dump No Waste" on grate.
      3) Located in Ditch Line: Model 6517 grate.
2. Substitutions: Not Permitted.

B. Description: ASTM A48/A48M, Class 35B gray cast iron and/or ASTM A536 ductile iron construction.
1. Machined flat bearing surfaces.
2. Live Load Rating: 40,000 lbs.
3. Finish: Uncoated.

2.3 ACCESSORIES

A. Adjusting Rings:
1. Products:
   a. American Highway Products Ltd.: Flex-O-Ring™.
   b. EJ Group, Inc.: Infra-Riser®.
   c. Substitutions: Section 01 60 00 - Product Requirements.
2. Description: Recycled rubber composite, round rings of ½-inch to 3-inch thickness or tapered thickness.

B. Sealant for Adjusting Rings:
1. Products:
   a. Sika Corporation: Sikaflex®-1a.
   b. Substitutions: Section 01 60 00 - Product Requirements.
2. Description: High-performance, moisture-cured, single component, polyurethane based, non-sag elastomeric sealant/adhesive.
3. ASTM C920, Type S, Grade NS, Class 35, use T, NT, O, M, G, or I.

C. Exterior Manhole Coating:
1. Products:
   a. W.R. Meadows, Inc.: SEALMASTIC™ Type II.
   b. Substitutions: Section 01 60 00 - Product Requirements.

2. ASTM D 1227, Type II, Class 1, cold-applied, emulsified-asphalt dampproofing, spray applied at a rate of 3 gallons per 100 square feet. Apply to the exterior surfaces of all manholes used for sanitary sewer service.

D. Concrete: MDOT 2012 Standard Specifications for Construction, Section 701:
1. Concrete Grade S3 per Tables 701-1A and 701-1B.

E. Grout: ASTM C1107 hydraulic cement grout, premixed compound consisting of non-metallic aggregate, cement, water reducing and plasticizing agents; capable of developing minimum compressive strength of 2,400 psi in 48 hours and 7,000 psi in 28 days. Required for all connections to concrete pipe.

F. Mortar: MDOT 2012 Standard Specifications for Construction, Section 702.
1. Type R-2 Mortar per Tables 702-1A and 702-1B.

G. Concrete Brick: ASTM C55 solid concrete brick with the following nominal size:
1. Depth: 2 to 2½ inches.
2. Width: 3½ to 3¾ inches.
3. Length: 7½ to 8 inches.

H. Resilient Pipe Connectors: ASTM C923, resilient EPDM or polyisoprene rubber; internal stainless steel expanding band; external stainless steel pipe clamp. Required for all connections to plastic or ductile iron pipe.

I. External Sealing Bands:
1. Products:
a. Cretex Specialty Products: Cretex Wrap.
b. Enpro Industries, Inc. (GPT): Riser-Wrap™.
c. Press-Seal Gasket Corporation: EZ-Wrap.
d. Substitutions: Section 01 16 00 - Product Requirements.
2. ASTM C877, Type I, II, or III, watertight and flexible sealing band.
a. Width: 9 inch minimum.
3. Required for all joints of manholes used for sanitary sewer service.

J. Internal Drop Connections:
1. Products:
a. Duran Inc.: Reliner® Inside Drop System.
b. Substitutions: Not permitted.
2. Plastic composite collection bowl and stainless steel clamping brackets.

2.4 BEDDING MATERIAL

A. Structure Bedding: MDOT 2012 Standard Specifications for Construction, Section 902.03.
1. Course Aggregate Class 6A per Tables 902-1 and 902-2.
2. The use of crushed concrete is prohibited within 100 feet of any water course (stream, river, county drain, etc.) and lake, regardless of the application or location of the water course or lake relative to the project limits.

2.5 SOURCE QUALITY CONTROL

A. Test concrete manhole and structure sections in accordance with ASTM C497.

PART 3 EXECUTION

3.1 EXAMINATION

A. Section 01 30 00 - Administrative Requirements: Verification of existing conditions before starting work.

B. Verify items provided by other sections of Work are properly sized and located.

C. Verify built-in items are in proper location, and ready for roughing into Work.

D. Verify correct size of manhole and structure excavation.

3.2 PREPARATION

A. Correct over excavation with structure bedding material.

B. Coordinate placement of inlet and outlet pipes required by other sections.

C. Do not install manholes and structures where site conditions induce loads exceeding structural capacity of manholes or structures.

D. Inspect precast concrete manholes and structures immediately prior to placement in excavation to verify manholes and structures are internally clean and free from damage. Remove and replace damaged units.

3.3 PRECAST CONCRETE MANHOLE AND STRUCTURE INSTALLATION

A. Excavation:
   1. Excavate for manholes and structures in accordance with Section 31 23 17 - Trenching and Backfilling. Hand trim excavation for accurate placement of manholes and structures in location and to elevations indicated on Drawings. Provide clearance around sidewalls of manhole or structure for construction operations and backfill.
   2. Dewater excavations to maintain dry conditions and preserve final grades at bottom of excavation.
   3. Provide sheeting and shoring in accordance with Section 31 23 33 - Trenching and Backfilling.
   4. Place bedding material at trench bottom. Level material in one continuous layer not exceeding 8 inches compacted depth. Compact to 95 percent maximum density per ASTM D1557.
   5. Where possibility exists of watertight manhole or structure becoming buoyant in flooded excavation, anchor manhole or structure to avoid flotation.

B. Lift precast manholes and structures at lifting points designated by manufacturer.

C. When lowering manholes and structures into excavations and joining pipe to units, take precautions to ensure interior of pipeline and manhole or structure remains clean.

D. Assemble multi-section manholes and structures by lowering each section into excavation. Install rubber gasket joints between precast sections in accordance with manufacturer's recommendations. Lower, set level, and firmly position base section before placing additional sections.

E. Remove foreign materials from joint surfaces and verify sealing materials are placed properly. Maintain alignment between sections by using guide devices affixed to lower section. Place manhole sections level and plumb.

F. Install external sealing bands at all joints of manholes used for sanitary sewer service. Follow manufacturer's instructions for selected product.

G. Verify manholes and structures installed satisfy required alignment and grade.

H. Connect plastic pipe to manhole or structure with resilient connectors. For profile wall plastic pipe, provide smooth wall adapter to ensure watertight assembly.

I. Connect concrete pipe to manhole or structure by filling annular space with grout or mortar. Support bottom of concrete pipe with concrete brick.

J. Cut pipe to finish flush with interior of manhole or structure.

K. Construct continuous flow channel using cast in place concrete for sanitary manholes that do not have precast flow channels. Form curved channels with smooth, uniform radius and slope. Slope concrete benches to drain to channel.
   1. Flow Channel Slope: 2.5% minimum.
   2. Flow Channel Width: Match outlet sewer diameter.
   3. Flow Channel Depth: 75% of outlet sewer diameter.
   4. Bench Slope: 4% minimum.

L. Backfill excavation in accordance with Section 31 23 33 - Trenching and Backfilling.

3.4 SANITARY MANHOLE DROP CONNECTIONS

A. Construct drop connections for sanitary sewer manholes when outlet invert is 24 inches or lower below inlet invert.

B. Determine size of bowl and drop pipe according to manufacturer's recommendation. Submit manufacturer's certification showing the bowl and drop pipe sizes and flow rate capacity. The flow rate capacity shall not be less than the flow rate capacity of the inlet sewer.

C. Construct drop connections inside manhole or structure using plastic sewer piping, plastic composite collection device and stainless steel bands. Install components in accordance with manufacturer's instructions.

D. Construct outside drop connections where indicated on Drawings. If type of drop connection is not indicated, use inside drop connection. Use plastic sewer piping and fittings. Use structure bedding as backfill and cover for outside drop connections. Do not encase in concrete.

3.5 FRAME AND COVER INSTALLATION

A. Place all asphalt courses except for top course prior to installing castings located in asphalt paving areas. Cut square opening through lower asphalt courses and remove material as necessary to place adjusting rings and casting.

B. Set adjusting rings of required thickness to achieve specified elevation. Select a combination of tapered rings to achieve required slope for non-level installations.

C. Apply double row of sealant between top of precast concrete and lower rubber adjusting ring. Apply single row of sealant between each rubber adjust ring. Apply double row of sealant over top adjusting ring to secure casting. Apply sealant in a continuous ¼ inch bead forming a closed loop with no gaps.

D. Install casting to the required elevation and slope, in full contact with top adjusting ring. Do not use shims or wedges. Do no use mortar.

E. After casting is set, apply one additional bead of sealant around exterior of casting, covering the joint between casting and top adjusting ring.

F. Fill remaining excavated space with concrete paving, flush with top of surrounding pavement base and leveling courses.

3.6 CONNECTION TO EXISTING MANHOLES AND STRUCTURES

A. Core drill circular opening in existing manhole or structure of size requires for connection of new sewer. Using pneumatic hammers, chipping guns, or sledge hammers is not permitted.

B. Insert new sewer pipe through cored opening and fill annular space grout or mortar.

C. Prevent construction debris from entering existing downstream sewer line when making connection.

D. Where necessary, cut new flow channel in existing bench. Use pneumatic hammers or chipping guns to form rough shape. Form finished flow channel with grout or mortar. Contour to form continuous flow channel to new pipe connection.

3.7 FIELD QUALITY CONTROL

A. Section 01 40 00 - Quality Requirements: Testing and Inspections by Contractor.

B. Visually inspect manholes, structures, and connections for leakage or infiltration prior to backfilling.

C. Vacuum Testing: Test in accordance with Section 33 01 30.13 - Sewer and Manhole Testing.

D. Geotechnical Tests:
   1. Provide Owner's representative with samples or access to stockpiles upon request.
   2. Owner's representative will perform laboratory testing of bedding and cover materials to determine gradation in accordance with ASTM C117 and ASTM C136.
   3. Owner's representative will perform testing of bedding and cover materials to determine maximum density in accordance with ASTM D1557 or Michigan Cone Test.

E. When tests indicate Work does not meet specified requirements, remove Work, replace and retest.

3.8 STANDARD DRAWINGS

A. Standard Sanitary Sewer Manhole

B. Standard Storm Sewer Manhole

C. Storm Sewer Catch Basin – 48 inch diameter and larger

D. Storm Sewer Catch Basin – 24 inch diameter

STANDARD SANITARY SEWER MANHOLE

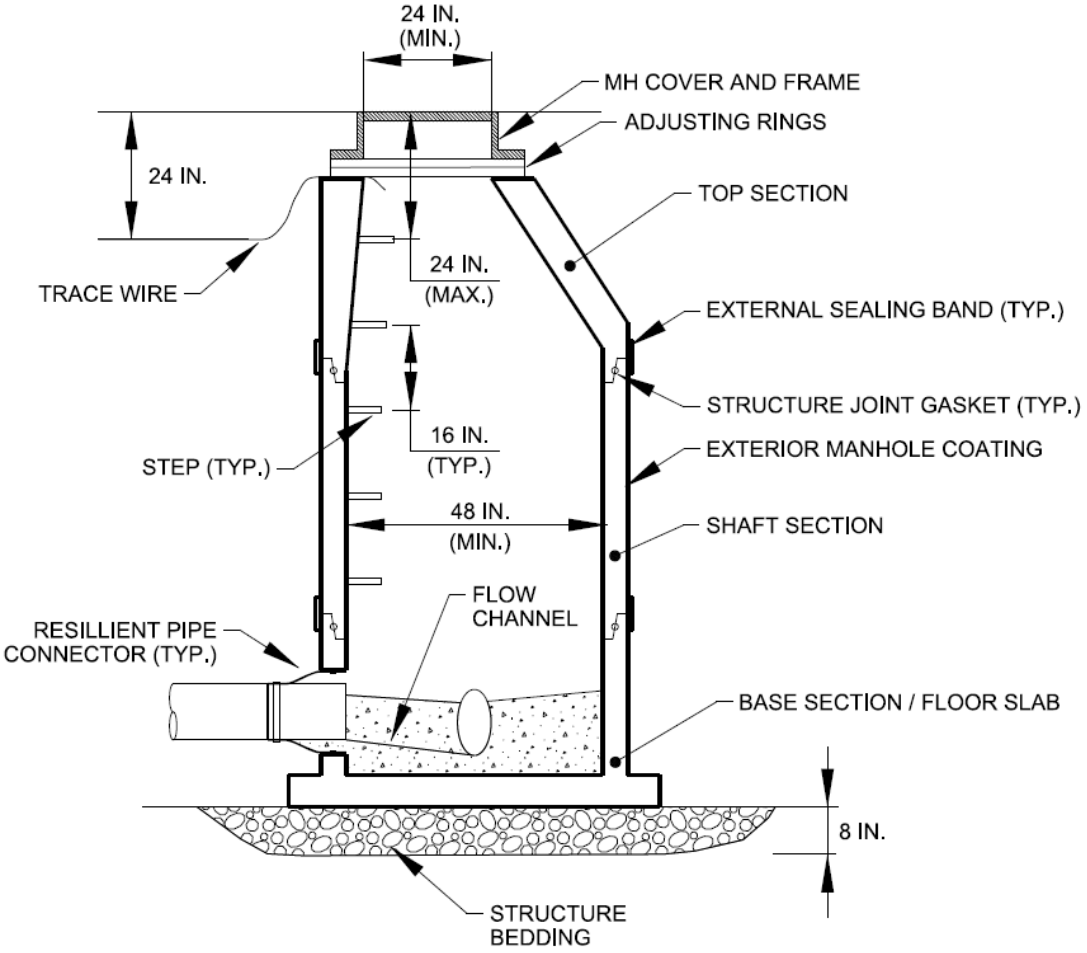

STANDARD STORM SEWER MANHOLE

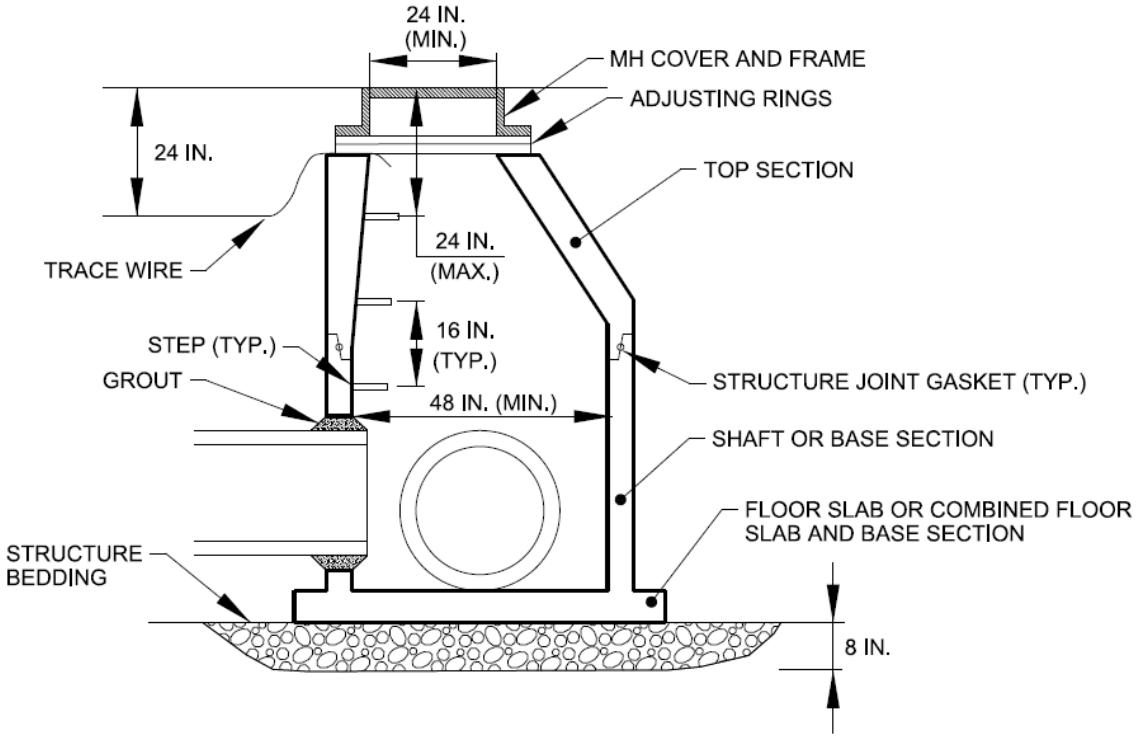

STORM SEWER CATCH BASIN
48 IN. DIA. AND LARGER

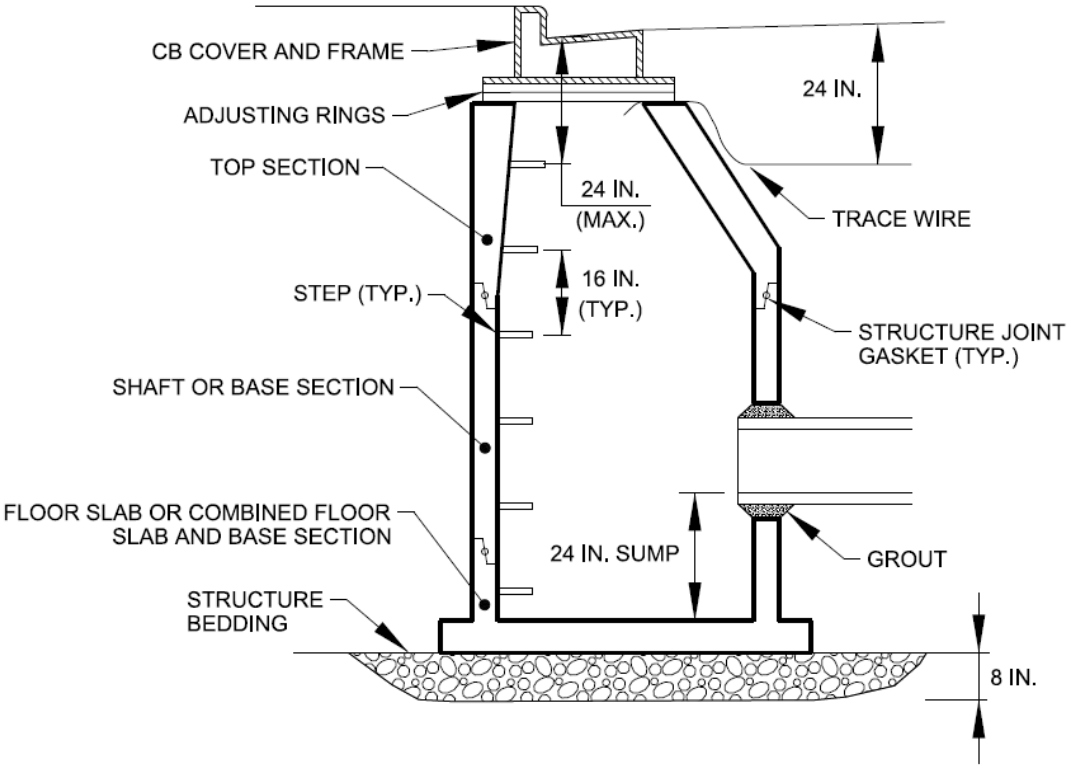

STORM SEWER CATCH BASIN - 24 IN.

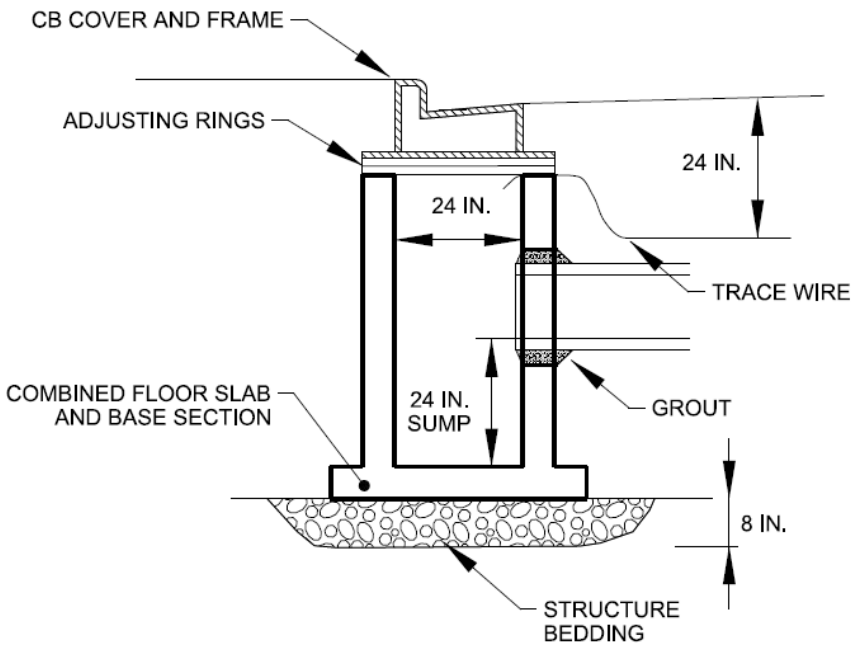

END OF SECTION

SECTION 33 05 14

UTILITY HORIZONTAL DIRECTIONAL DRILLING

PART 1 GENERAL

1.1 SUMMARY

A. Section Includes:
1. Excavation for approach trenches and pits.
2. Horizontal directional drilling.

B. Related Sections:
1. Section 03 30 00 – Cast-In-Place Concrete.
2. Section 03 60 00 – Grouting.
3. Section 31 05 13 – Soils for Earthwork.
4. Section 31 23 16 – Excavation.
5. Section 31 23 17 – Trenching and Backfilling.
6. Section 31 23 23 – Fill.
7. Section 33 01 32 – Sewer and Manhole Testing.
8. Section 33 11 13 – Public Water Utility Distribution Piping.
9. Section 33 13 00 – Disinfection of Water Utility Distribution.
10. Section 33 34 00 – Public Sanitary Sewerage Force Mains.

1.2 REFERENCES

A. American Association of State Highway and Transportation Officials:
1. AASHTO T180 - Standard Specification for Moisture-Density Relations of Soils Using a 4.54-kg (10-lb) Rammer and a 457-mm (18-in.) Drop.

B. ASTM International:
1. ASTM D698 - Standard Test Method for Laboratory Compaction Characteristics of Soil Using Standard Effort (12,400 ft-lbf/ft3 (600 kN-m/m3)).
2. ASTM D1557 - Standard Test Method for Laboratory Compaction Characteristics of Soil Using Modified Effort (6,000 ft-lbf/ft3 (2,700 kN-m/m3)).
3. ASTM D2922 - Standard Test Method for Density of Soil and Soil-Aggregate in Place by Nuclear Methods (Shallow Depth).
4. ASTM D3017 - Standard Test Method for Water Content of Soil and Rock in Place by Nuclear Methods (Shallow Depth).
5. ASTM F1962 - Standard Guide for Use of Maxi-Horizontal Directional Drilling for Placement of Polyethylene Pipe or Conduit Under Obstacles, Including River Crossings.

C. National Utility Contractors Association:
1. NUCA - HDD Installation Guidelines.

1.3 DESIGN REQUIREMENTS

A. Design Criteria:
1. Drilling Steering System: Remote with continuous electronic monitoring of boring depth and location.
2. Directional Change Capability: 90 degree with 35 foot radius curve.
3. Minimum distance for single bores and between boring pits:

Table 1: Minimum distance for single bores and between boring pits

Pipe Size	Boring Distance
1 to 1-1/2 inches	400 feet
2 to 2-1/2 inches	350 feet
3 to 6 inches	300 feet
Larger than 6 inches	Submit with Contractor's boring plan.

4. Ratio of Reaming Diameter to Pipe Outside Diameter:
   a. Nominal Pipe Diameter of 6 Inches and Smaller: 1.5 maximum.
   b. Nominal pipe diameter larger than 6 Inches: Submit recommended ratio and reaming procedures for review.

1.4 SUBMITTALS

A. Section 01 33 00 - Submittal Procedures: Requirements for submittals.

B. Shop Drawings:
1. Submit technical data for equipment, method of installation, and proposed sequence of construction.
2. Include information pertaining to pits, dewatering, method of spoils removal, equipment size and capacity, equipment capabilities including installing pipe on radius, type of drill bit, drilling fluid, method of monitoring line and grade and detection of surface movement, name plate data for drilling equipment and mobile spoils removal unit.

C. Product Data:
1. Identify source of water used for drilling.
2. Submit copy of approvals and permits for use of water source.

D. Installer Qualifications: Submit history of previous work completed of equivalent nature and scope. Include qualification and experience of key personnel.

E. Submit State of Michigan Department of Transportation occupancy permit for installations under public throughways and lands.

F. Manufacturer's Certificate: Certify products and equipment meet or exceed specified requirements.

1.5 CLOSEOUT SUBMITTALS

A. Section 01 70 00 - Execution and Closeout Requirements: Requirements for submittals.

B. Project Record Documents: Record actual locations of pipe and invert elevations.

C. Identify and describe unexpected variations to subsoil conditions or discovery of uncharted utilities.

D. Record actual depth of pipe at 25 foot intervals.

E. Record actual horizontal location of installed pipe.

F. Show depth and location of abandoned bores.

G. Record depth and location of drill bits and drill stems not removed from bore.

1.6 QUALITY ASSURANCE

A. Perform work in accordance with the following:
   1. NUCA HDD Installation Guidelines.
   2. ASTM F1962.

B. Where work occurs within Michigan Department of Transportation Perform Work in accordance with MDOT specifications for Horizontal Directional Drilling and in accordance with MDOT Permit.

C. Maintain one copy of each document on site.

1.7 QUALIFICATIONS

A. Installer: Company specializing in performing work of this section with minimum 7 years documented experience.
   1. Contractor shall provide proof of personnel trained in the use of fusion equipment for fusing HDPE piping.
   2. Contractor shall have successfully completed a minimum of three (3) projects with 12 inch diameter or greater HDPE pipe with a minimum HDD pull length of 600 linear feet crossing a channel, river, or stream within the last five (5) years.
   3. Contractor must provide proof of directional drilling 40,000 linear feet of pipe at least 8” or larger in diameter in the last three (3) years.
   4. Contractor shall provide documentation for performing HDD in various soil types including but not limited to sand, silt, clay, and peat.
   5. Contractor must submit a minimum of five (5) references from projects of similar magnitude and scope.

1.8 PRE-INSTALLATION MEETINGS

A. Section 01 30 00 - Administrative Requirements: Pre-installation meeting.

B. Convene minimum one week prior to commencing work of this section.

1.9 DELIVERY, STORAGE, AND HANDLING

A. Section 01 60 00 - Product Requirements: Requirements for transporting, handling, storing, and protecting products.

B. Provide temporary end caps and closures on piping and fittings until pipe is installed.

C. Protect pipe from entry of foreign materials and water by temporary covers, completing sections of work, and isolating parts of completed system.

D. Accept products on site in manufacturer's original containers or configuration. Inspect for damage.

E. Use shipping braces between layers of stacked pipe. Stack piping lengths no more than 3 layers high.

F. Store field joint materials indoors in dry area in original shipping containers. Maintain storage temperature of 60 to 85 degrees F.

G. Support pipes with nylon slings during handling.

1.10 ENVIRONMENTAL REQUIREMENTS

A. Section 01 60 00 - Product Requirements: Environmental conditions affecting products on site.

B. Conduct operations so as not to interfere with, interrupt, damage, destroy, or endanger integrity of surface or subsurface structures or utilities, and landscape in immediate or adjacent areas.

1.11 COORDINATION

A. Section 01 30 00 - Administrative Requirements: Requirements for coordination.

B. Coordinate work with Village of Paw Paw Department of Public Services, the Michigan Department of Transportation and utilities within construction area.

PART 2 PRODUCTS

2.1 DRILLING FLUID

A. Drilling Fluid: Liquid bentonite clay slurry; totally inert with no environmental risk.

2.2 PIPE

A. For work within the MDOT right-of-way, furnish materials in accordance with MDOT specifications for Horizontal Directional Drilling and in accordance with MDOT Permit.

B. Water Distribution System Pipe: High Density Polyethylene as specified in Section 33 11 13 – Public Water Utility Distribution Piping

C. Sanitary Sewage Force Mains: High Density Polyethylene as specified in Section 33 34 00 – Public Sanitary Sewerage Force Mains.

2.3 FILL MATERIALS

A. Subsoil Fill: Type S2 as specified in Section 31 05 13 – Soils for Exterior Improvements. Excavated and reused soil may be used with written approval from the Engineer.

B. Subsoil Fill shall contain no rocks over 4 inches in diameter, frozen earth or foreign matter.

2.4 WATER SOURCE

A. Water: Potable, obtained from the Public Utility.

2.5 UNDERGROUND PIPE MARKERS

A. Trace Wire: Electronic detection materials for non-conductive piping products.
1. Unshielded 10 gage copper wire.
2. Conductive tape.

2.6 ACCESSORIES

A. Grout: As specified in Section 04-05-11 – Mortaring and Grouting.

B. Flowable Fill: As specified in Section 31 23 33 – Trenching and Backfilling.

PART 3 EXECUTION

3.1 EXAMINATION

A. Section 01 30 00 - Administrative Requirements: Verification of existing conditions before starting work.

B. Verify connection to existing piping system size, location, and invert elevations are in accordance with Drawings.

3.2 PREPARATION

A. Call Miss Digg (811) not less than three working days before performing Work.

B. Request underground utilities to be located and marked within and surrounding construction areas.

C. Locate, identify, and protect utilities indicated to remain from damage.

D. Notify utility company to remove and relocate utilities as needed.

E. Identify required lines, levels, contours, and datum locations.

F. Protect plant life, lawns, and other features remaining as portion of final landscaping.

G. Protect bench marks, survey control points, existing structures, fences, sidewalks, paving, and curbs from excavating equipment and vehicular traffic.

H. Establish pipe elevations with not less than 5 feet of cover.

I. Establish minimum separation between the installed utility and other utility services services in accordance with GLUMRB 10 State Standards with additional tolerances for variations in boring alignment, locating tolerances, etc.

3.3 DEWATERING

A. Dewater work areas in accordance with Section 31 23 19 – Dewatering.

B. Capture, contain, and properly dispose of excess drilling fluid and comingled cuttings.

C. Intercept and divert surface drainage, precipitation, and groundwater away from excavation through use of dikes, curb walls, ditches, pipes, sumps or other means.

D. Develop and maintain substantially dry subgrade during drilling and pipe installation.

E. Comply with State of Michigan requirements for discharging water to watercourse, preventing stream degradation, and erosion and sediment control.

3.4 EXISTING WORK

A. Maintain access to existing facilities indicated to remain. Modify pipe installation indicated on Drawings to maintain access to existing facilities.

3.5 EXCAVATION

A. Excavate subsoil as specified in Section 31 23 16 – Excavation.

B. Excavate approach trenches and pits in accordance with shop drawings and as site conditions require. Minimize number of access pits.

C. Provide sump areas to contain drilling fluids.

D. Install excavation supports as specified in Section 31 23 16 – Excavation.

E. Restore areas after completion of drilling and carrier pipe installation.

3.6 DRILLING

A. Drill pilot bore with vertical and horizontal alignment as indicated on Drawings. Any modification to the pipe alignment shown on the Drawings must be shown in the Shop Drawings and approved by the Engineer prior to installation.

B. Guide drill remotely from ground surface to maintain alignment by monitoring signals transmitted from drill bit.
   1. Monitor depth, pitch, and position.
   2. Adjust drill head orientation to maintain correct alignment.

C. Inject drilling fluid into bore to stabilize hole, remove cuttings, and lubricate drill bit and pipe.

D. Continuously monitor drilling fluid pumping rate, pressure, viscosity, and density while drilling pilot bore, back reaming, and installing pipe to ensure adequate removal of soil cuttings and stabilization of bore.
   1. Provide relief holes when required to relieve excess pressure.
   2. Minimize heaving during pullback.

E. Calibrate and verify electronic monitor accuracy during first 50 feet of bore in presence of Architect/Engineer before proceeding with other drilling. Excavate minimum of four test pits spaced along first 50 feet bore to verify required accuracy. When required accuracy is not met, adjust equipment or provide new equipment capable of meeting required accuracy.

F. After completing pilot bore, remove drill bit.

3.7 DRILLING OBSTRUCTIONS

A. When obstructions are encountered during drilling, notify Architect/Engineer immediately. Do not proceed around obstruction without Architect/Engineer's approval.

B. For conditions requiring more than 3 feet deviation in horizontal alignment, submit new shop drawings to Architect/Engineer for approval before resuming work.

C. Maintain adjusted bore alignment within easement or right-of-way.

3.8 PIPE INSTALLATION

3.9 After completing pilot bore, remove drill bit. Install reamer and pipe pulling head.
   1. Select reamer with minimum bore diameter required for pipe installation.
   2. Conduct additional reaming passes as needed to enlarge pilot bore for installation of pipe.

B. Attach pipe to pipe pulling head. Pull reamer and pipe to entry pit along pilot bore.

C. Inject drilling fluid through reamer to stabilize bore and lubricate pipe.

D. Install piping with horizontal and vertical alignment as shown on Drawings. Any modification to the pipe alignment shown on the Drawings must be shown in the Shop Drawings and approved by the Engineer prior to installation.

E. Protect and support pipe being pulled into bore so pipe moves freely and is not damaged during installation.

F. Do not exceed pipe manufacturer's recommended pullback forces.

G. Install trace wire continuous with each bore. Splice trace wire only at intermediate bore pits. Tape or insulate trace wire to prevent corrosion and maintain integrity of pipe detection.
   1. Terminate trace wire for each pipe run at structures along pipe system.
   2. Provide extra length of trace wire at each structure, so trace wire can be pulled 3 feet out top of structure for connection to detection equipment.
   3. Test trace wire for continuity for each bore before acceptance.

H. Provide sufficient length of pipe to extend past termination point to allow connection to other pipe sections.

I. Allow minimum of 24 hours for stabilization after installing pipe before making connections to pipe.

J. Mark location and depth of bore with spray paint on paved surfaces, and wooden stakes on non-paved surfaces at 25 foot intervals.

3.10 SLURRY REMOVAL AND DISPOSAL

A. Contain excess drilling fluids at entry and exit points until recycled or removed from site. Provide recovery system to remove drilling spoils from access pits.

B. Remove, transport and legally dispose of drilling spoils.
   1. Do not discharge drilling spoils in sanitary sewers, storm sewers, or other drainage systems.
   2. When drilling in suspected contaminated soil, test drilling fluid for contamination before disposal.

C. When drilling fluid leaks to surface, immediately contain leak and barricade area from vehicular and pedestrian travel before resuming drilling operations.

D. Complete cleanup of drilling fluid at end of each work day.

3.11 BACKFILL

A. Install backfill as specified in Section 31 23 23 – Trenching and Backfilling.

B. Backfill approach trenches and pits with subsoil fill to contours and elevations indicated on Drawings.

C. Compact subsoil fill as specified in Section 31 23 23 – Fill percent of maximum density.

3.12 ERECTION TOLERANCES

A. Section 01 40 00 - Quality Requirements: Tolerances.

B. Maximum Variation From Horizontal Position: 12 inches.

C. Maximum Variation From Vertical Elevation: 2 inches.

D. Minimum Horizontal and Vertical Clearance From Other Utilities: 36 inches.

E. When pipe installation deviates beyond specified tolerances, abandon bore, remove installed pipe, re-bore, and reinstall pipe in correct alignment.

F. Fill abandoned bores greater than 3 inches in diameter with grout or flowable fill material.

3.13 FIELD QUALITY CONTROL

A. Section 01 40 00 - Quality Requirements and 01 70 00 - Execution and Closeout Requirements: Field inspecting, testing, adjusting, and balancing.

B. Upon completion of pipe installation, test pipe in accordance with the following:
   1. Water Distribution Pipe Testing:
      a. Section 33 11 13 – Public Water Distribution Piping, and;
      b. Section 33 13 00 – Disinfection of Water Utility Distribution.
   2. Sanitary Sewer Force Mains: Section 33 34 00 – Public Sanitary Sewerage Force Mains.

C. Compaction Testing: As specified in Section 31 23 23 – Trenching and Backfilling.

D. When tests indicate Work does not meet specified requirements, remove Work, replace and retest.

3.14 MANUFACTURER'S FIELD SERVICES

A. Section 01 40 00 - Quality Requirements: Requirements for manufacturer’s field services.

B. Furnish services of manufacturer’s field representative experienced in installation of drilling equipment and products furnished under this specification for not less than 2 man-days on-site for installation, inspection and field testing, and instructing Contractor’s personnel in the use and maintenance of drilling equipment.

C. Certify that equipment for drilling has been properly set-up and is ready for drilling.

3.15 CLEANING

A. Upon completion of drilling and pipe installation, remove drilling spoils, debris, and unacceptable material from approach trenches and pits. Clean up excess slurry from ground.

B. Restore approach trenches and pits to original condition.

C. Remove temporary facilities for drilling operations in accordance with Section 01 50 00 - Temporary Facilities and Controls.

END OF SECTION

SECTION 33 11 13

PUBLIC WATER UTILITY DISTRIBUTION PIPING

PART 1 GENERAL

1.1 SUMMARY

A. Section Includes:
1. Pipe and fittings for public water mains.
2. Tapping Sleeves and Valves.
3. Valves and Valve Boxes.
4. Fire Hydrants.
5. Precast concrete vault.
6. Pipe Support Systems.
7. Concrete encasement and cradles.
8. Bedding and cover materials.

B. Related Sections:
1. Section 31 10 01 – Pavement and Utilities Removal.
2. Section 31 23 17 – Trenching.
3. Section 33 05 14 – Public Manholes and Structures.
4. Section 33 05 24 – Utility Horizontal Directional Drilling.
5. Section 33 12 13 – Water Service Connections.
6. Section 33 13 00 – Disinfecting of Water Utility Distribution.

1.2 UNIT PRICE - MEASUREMENT AND PAYMENT

A. Watermain, __ inch:
1. Basis of Measurement: By linear foot.
2. Basis of Payment: Includes trenching, hand trimming excavation, pipe and fittings, thrust restraints, protective coatings and wrapping, electrical conductivity, bedding, backfill and compaction, disinfection and testing.

B. Watermain, __ inch, Horizontal Directional Drilling (HDD):
1. Basis of Measurement: By foot.
2. Basis of Payment: Includes trenching, horizontal directional drilling, pipe and fittings, thrust restraints, tracer wire, bedding, backfill, compaction, disinfection, and testing.
3. Basis of Application: This pay item shall apply to all watermains that are installed by horizontal directional drilling.

C. Valve & Box, __ inch:
1. Basis of Measurement: Each.
2. Basis of Payment: Includes excavation, valve, valve box, accessories, backfill and compaction.

D. Hydrant Assembly:

1. Basis of Measurement: Each.
2. Basis of Payment: Includes excavation, fittings, valve, valve box, fire hydrant, accessories, backfill and compaction.

E. Hydrant Lead, 6 inch:
1. Basis of Measurement: Linear Foot, measured along the length of the hydrant supply line from the main to the hydrant.
2. Basis of Payment: Includes excavation, pipe, backfill and compaction.

F. Live Tap, __ inch x __inch:
1. Basis of Measurement: By each.
2. Basis of Payment: Includes tapping sleeve, tapping valve & box, and execution of live tapping operation, excavation and backfill.

G. Line Stop __ inch:
1. Basis of Measurement: By each, at approved locations only.
2. Basis of Payment: Includes excavation, tapping sleeve, temporary line stop assembly, completion coupon, protective flange, backfill and compaction.

H. Thrust Block
1. Basis of Measurement: By each, at approved locations only.
2. Basis of Payment: Includes excavation, restraining anchor, forming, and cast in place concrete.

1.3 REFERENCES

A. American Society of Mechanical Engineers:
1. ASME B16.1 - Cast Iron Pipe Flanges and Flanged Fittings.

B. ASTM International:
1. ASTM A36/A36M - Standard Specification for Carbon Structural Steel.
2. ASTM A123/A123M - Standard Specification for Zinc (Hot-Dip Galvanized) Coatings on Iron and Steel Products.
3. ASTM A307 - Standard Specification for Carbon Steel Bolts and Studs, 60,000 PSI Tensile Strength.
4. ASTM D2774 - Standard Practice for Underground Installation of Thermoplastic Pressure Piping.
5. ASTM D3261 - Standard Specification for Butt Heat Fusion Polyethylene (PE) Plastic Fittings for Polyethylene (PE) Plastic Pipe and Tubing.
6. ASTM D3350 - Standard Specification for Polyethylene Plastics Pipe and Fitting Materials.
7. ASTM F714 - Standard Specification for Polyethylene (PE) Plastic Pipe (SDR-PR) Based on Outside Diameter.
8. ASTM F2164 - Standard Practice for Field Leak Testing of Polyethylene (PE) Pressure Piping Systems Using Hydrostatic Pressure.
9. ASTM F2620 - Standard Practice for Heat Fusion Joining of Polyethylene Pipe and Fittings.

C. American Water Works Association:

1. AWWA C104 - ANSI Standard for Cement Mortar Lining for Ductile-Iron Pipe and Fittings for Water.
2. AWWA C105 - ANSI Standard for Polyethylene Encasement for Ductile-Iron Pipe Systems.
3. AWWA C110 - ANSI Standard for Ductile-Iron and Gray-Iron Fittings, 3 inch Through 48 inch, for Water.
4. AWWA C111 - ANSI Standard for Rubber-Gasket Joints for Ductile-Iron Pressure Pipe and Fittings.
5. AWWA C115 - ANSI Standard for Flanged Ductile-Iron Pipe with Ductile-Iron or Gray-Iron Threaded Flanges.
6. AWWA C150 - ANSI Standard for Thickness Design of Ductile Iron Pipe.
7. AWWA C151 - ANSI Standard for Ductile-Iron Pipe, Centrifugally Cast, for Water or Other Liquids.
8. AWWA C153 - ANSI Standard for Ductile-Iron Compact Fittings for Water Service.
9. AWWA C502 - Dry-Barrel Fire Hydrants.
10. AWWA C509 - Resilient-Seated Gate Valves for Water Supply Service.
11. AWWA C515 - Reduced-Wall, Resilient-Seated Gate Valves for Water Supply Service.
12. AWWA C550 - Protecting Epoxy Interior Coating for Valves and Hydrants.
13. AWWA C600 - Installation of Ductile-Iron Water Mains and Their Appurtenances.
14. AWWA C906 – Polyethylene (PE) Pressure Pipe and Fillings, 4 inch Through 65 inch, for Water Distribution and Transmission.
15. AWWA M55 – Manual of Water Supply Practices, PE Pipe – Design and Installation.

D. National Fire Protection Association:
1. NFPA 1963 - Standard for Fire Hose Connections.

E. National Sanitation Foundation:
1. NSF 61 - Drinking Water System Components - Health Effects.

1.4 SUBMITTALS

A. Section 01 33 00 - Submittal Procedures: Requirements for submittals.

B. Product Data: Submit manufacturer’s latest published literature including illustrations, installations instructions, maintenance instructions and parts lists.

C. Manufacturer's Certificate: Certify Products meet or exceed specified requirements.

1.5 CLOSEOUT SUBMITTALS

A. Section 01 70 00 - Execution and Closeout Requirements: Requirements for submittals.

B. Hydrostatic Pressure and Leakage Test Report
1. Date
2. Start time and pressure

3. End time and pressure
4. Description or sketch showing configuration of equipment used
5. Calculation of allowable leakage
6. Record of actual leakage measured

C. Project Record Documents: Record on asbuilt drawings:
1. Any variations from approved plans, including but not limited to:
   a. location of watermain
   b. location and configuration of connection to existing watermain
   c. deviations from standard depth or depth at crossings
   d. type and configuration of components and materials
   e. discovery of any uncharted utilities or unexpected subsoil conditions
   f. location of any hydrants with plugged drain holes.
2. As built measurements
   a. Main – distance measured along main between:
      1) Fittings (tees, bends, reducers, etc.)
      2) Valves
      3) Hydrants (including valves an fittings
   b. Services:
      1) Tap: This is the distance measured along the main from the corporation stop to nearest main fitting.
      2) L: This is the length of the service line from the corporation stop to the curb stop or meter pit.
      3) Tail: For services stubbed for future connection, this is the length of service line installed beyond the curb stop.
   c. Witnesses:
      1) Curb Stop Boxes: for each curb stop box include two witness dimensions:
         a) Use manholes, catch basins, hydrants, power poles, or property corners
         b) Do not witness curb stop boxes to trees or buildings.
      2) Main Valves: for each watermain valve, include:
         a) One witness dimension to each other watermain valve in the immediate vicinity
         b) Two witness dimensions to other permanent structures
            (1) Use manholes, catch basins, hydrants
            (2) Do not witness watermain valves to property corners, buildings, power poles, or trees.

D. Identify and describe unexpected variations to subsoil conditions or discovery of uncharted utilities.

E. Provide Operation and Maintenance Data for valves and hydrants.

1.6 QUALITY ASSURANCE

A. Valves and hydrants: Mark valve and hydrant bodies with manufacturer's name and pressure rating.

B. Provide independent certification that fusion bonded epoxy for valve and hydrant coating complies with NSF 61.

C. Manufacturer Qualifications: Company specializing in manufacturing Products specified in this section.

1.7 DELIVERY, STORAGE, AND HANDLING

A. Section 01 60 00 - Product Requirements: Requirements for transporting, handling, storing and protecting products.

B. Deliver and store valves in shipping containers with labeling in place.

C. Prepare hydrants, valves and accessories for shipment according to AWWA Standards. Seal hydrant and valve ends to prevent entry of foreign matter into product body.

D. Store products in areas protected from weather, moisture, or possible damage. Do not store products directly on ground. Handle products to prevent damage to interior or exterior surfaces.

E. Block individual and stockpiled pipe lengths to prevent moving.

F. Do not place pipe or pipe materials on private property or in areas obstructing pedestrian or vehicle traffic.

G. Do not place pipe flat on ground. Cradle to prevent point stress.

H. Store UV sensitive materials out of direct sunlight.

1.8 FIELD CONDITIONS

A. Verify field measurements prior to fabrication.

B. Conduct operations not to interfere with, interrupt, damage, destroy, or endanger integrity of surface or subsurface structures or utilities, and landscape in immediate or adjacent areas.

PART 2 PRODUCTS

2.1 WATER PIPING

A. Products:
1. Restraining Glands:
a. Ebaa Iron Sales, Inc.: Series 1100.
b. Ford Meter Box Company, Inc.: Uni-Flange Series 1400.
c. Romac Industries, Inc.: GripRing.
d. Substitutions: Not Permitted.
2. Restraining Harnesses:

a. Ebaa Iron Sales, Inc.: Series 1700.
b. Ford Meter Box Company, Inc.: Uni-Flange Series 1450.
c. Substitutions: Not Permitted.

B. Ductile Iron Pipe: AWWA C151.
1. Bituminous outside coating: AWWA C151.
2. Cement Mortar Lining: AWWA C104, standard thickness.
3. Pipe Thickness Class: AWWA C150, thickness class 52.
4. Joints:
a. Mechanical and Push-On Joints: AWWA C111.
b. Flanged Joints: AWWA C115.
c. Rubber Gaskets: AWWA C111. Locking gaskets not permitted.
5. Fittings: AWWA C110, ductile-iron fittings or AWWA C153, ductile-iron compact fittings.
a. Coating and Lining:
1) Bituminous Coating: AWWA C110.
2) Cement Mortar Lining: AWWA C104, standard thickness.
b. Joints: AWWA C111, mechanical joints.
6. Polyethylene Encasement: AWWA C105 polyethylene jacket.
7. Restraints:
a. Restraining Glands: Ductile iron glands with continuous or individual gripping wedges.
b. Restraining Harnesses: Ductile iron restraining rings with individual gripping wedges, ductile iron follower rings, and low alloy steel tie bolts or rods.
8. Electrical Conductivity: Provide copper conductivity straps, factory welded to pipe ends with field installed jumper strap and silicon-bronze bolts.

C. Polyethylene Pipe: AWWA C906.
1. Material: ASTM D3350, high density polyethylene designation code PE3608 or higher. Minimum cell classification PE345464C.
2. Pressure Class: AWWA C906, 160 psig.
3. Outside Diameter: Polyethylene pipe shall have the same outside diameter as equivalent size of ductile iron pipe (DIOD).
4. Joints: Thermal butt fusion.
5. Fittings: ASTM D3261 for butt fusion joints. Fittings shall be made of the same material, conform to the same pressure class, and have the same outside diameter at piping.
6. Electrical Conductivity: Provide tracer wire parallel to polyethylene pipe.

2.2 TAPPING SLEEVES

A. Tapping Sleeves:
1. Products:
a. Ford Meter Box Company: Style FTSS-4-MJ.
b. Romac Industries, Inc.: SST III-MJ.
c. Substitutions: Not permitted.
2. Stainless steel, two piece bolted sleeve with ductile iron or stainless steel mechanical joint outlet for new branch connection.

2.3 RESILIENT WEDGE GATE VALVES

A. Products:
1. American AVK Company: Series 45.
2. American Flow Control: Series 2500.
3. East Jordan Iron Works: FlowMaster.
4. Substitutions: Not Permitted.

B. Resilient Wedge Gate Valves: AWWA C509 or AWWA C515; ductile iron body and bonnet.
1. Resilient seats.
2. Stem: Non-rising bronze or stainless steel stem.
3. Operating Nut: 2 inch square; open clockwise.
4. Ends: Mechanical joint.
5. Coating: AWWA C550; interior/exterior.
6. Pressure Rating:
   a. Sizes 12 inch diameter and smaller: 200 psig.
   b. Sizes 16 inch diameter and larger: 150 psig.

2.4 VALVE BOXES

A. Products:
1. East Jordan Iron Works: 8560 Series.
2. Tyler Union: 6960 Series.
3. Substitutions: Section 01 60 00 - Product Requirements.

B. Domestic cast iron, three-piece, screw type.

C. Base Section:
1. Valves 8 inch and smaller: No. 4 round base.
2. 10 inch and 12 inch valves: No. 6 round base.
3. Valves 16 inch and larger: No. 160 base.

D. Lid: Cast iron, non-locking, marked "Water".

E. Protective Coating: Coal tar or bituminous coating.

2.5 FIRE HYDRANTS

A. Products:
1. East Jordan Iron Works: Model 5BR250.
2. Substitutions: Not Permitted.

B. Dry-barrel Break-away Type: AWWA C502; cast-iron body, compression type valve.
1. Bury Depth: As needed to match depth of watermain.
2. Inlet Connection: 6 inches.
3. Valve Opening: 5-1/4 inches diameter.
4. Operation Nut: Pentagon, 1-1/2 inches point to flat.
5. Ends: Mechanical Joint.

6. Bolts and Nuts: Corrosion resistant.
7. Interior Coating: AWWA C550.
8. Direction of Opening: Counterclockwise.
9. Nozzles: One 4-1/2 inch pumper and two 2-1/2 inch hose connections, NFPA 1963 standard. Attach nozzle caps by separate chains.
10. Exterior Finish: Primer and two coats of red enamel.

C. Accessories:
1. Support Blocking: Concrete Grade S3 in accordance with Michigan Department of Transportation 2012 Standard Specifications for Construction Tables 701-1A and 701-1B.
2. Drainage Aggregate: Aggregate for hydrant drainage shall be course aggregate 6A in accordance with Michigan Department of Transportation 2012 Standard Specifications for Construction, Table 902-1.

2.6 LINE STOPPING SYSTEM

A. Manufacturer: ADS L.L.C.
1. Product Line: Hydra-Stop®.

B. Substitutions: 01 60 00 Product Requirements.

2.7 AIR RELEASE VALVES

A. Manufacturers: APCO/Valve and Primer Corporation.

B. Model: Appropriate for application, approved by Engineer.

C. Cast Iron Body, stainless steel float.

D. Substitutions: 01 60 00 Product Requirements.

2.8 PRECAST CONCRETE VALVE VAULTS

A. Products:
1. Frames and Covers:
a. East Jordan Iron Works, Inc.: 1986.

B. Precast Concrete Valve Vaults: Conform to Section 33 05 14.

C. Frames and Covers: Conform to Section 33 05 14.

2.9 PIPE SUPPORTS AND ANCHORING

A. Metal for pipe support brackets: Structural steel, galvanized, thoroughly coated with bituminous paint.

B. Metal tie rods and clamps or lugs: Galvanized steel sized in accordance with NFPA 24 thoroughly coated with bituminous paint.

2.10 UNDERGROUND PIPE MARKERS

A. Products:
1. Trace Wire:
a. Copperhead Industries, LLC: Reinforced Tracer Wire™.
b. Substitutions: Not permitted.
2. Ball Markers:
a. 3M: EMS iD Ball Marker - Water 1423-XR/iD.
b. Substitutions: Not permitted.

B. Trace Wire: Magnetic detectable conductor, 30 mil blue colored plastic covering, #12 AWG.

C. Ball Markers: Round, high-density watertight polyethylene shell, impervious to minerals, chemicals, and temperature extremes normally found in the underground environment. RFID marker shall be encased within shell in a biodegradable mixture of propylene glycol and water.
1. Color: Blue.

2.11 CONCRETE ENCASEMENT AND CRADLES

A. Concrete: Concrete Grade S3 as defined by Michigan Department of Transportation 2012 Standard Specifications for Construction Tables 701-1A and 701-1B.

2.12 BEDDING AND COVER MATERIALS

A. Bedding and Cover: Granular material Class II as defined by Michigan Department of Transportation 2012 Standard Specifications for Construction Table 902-3.

B. Suitable on site material may be utilized as bedding and cover with approval of Engineer.

C. Soil Backfill from Above Pipe to Finish Grade: As specified in Section 31 23 17 - Trenching.

2.13 ACCESSORIES

A. Steel rods, bolt, lugs and brackets: ASTM A36/A36M or ASTM A307 Grade A carbon steel.

B. Protective Coating: Coal tar or bituminous coating.

2.14 FINISHING - STEEL

A. Galvanizing: ASTM A123/A123M; hot dip galvanize after fabrication.

2.15 EQUIPMENT FOR PRESSURE TESTING

A. Sufficient to withstand pressures

B. Capable of injecting water into watermain during leakage test.

2.16 EQUIPMENT FOR ELECTRICAL CONDUCTIVITY TESTING

A. Portable digital micro-ohm meter capable of measuring resistance to the nearest 0.1 μΩ (micro-ohms).

PART 3 EXECUTION

3.1 EXAMINATION

A. Section 01 30 00 - Administrative Requirements: Verification of existing conditions before starting work.

B. Determine exact location and size of valves and hydrants from Drawings; obtain clarification and directions from Engineer prior to execution of work.

C. Verify that existing utility water main size, location, and invert are as indicated on Drawings.

D. Verify invert elevations of existing work prior to excavation and installation of water main, valves, hydrant, and accessories.

E. Identify location of existing valves, obtain confirmation from South Haven Public Works of operable condition. Identify location of line stops needed for connection to existing water system. Do not utilize line stops where existing valves can be utilized without interrupting service to water customers.

3.2 PREPARATION

A. Identify required lines, levels, contours and datum locations.

B. Locate, identify, and protect utilities to remain from damage.

C. Do not interrupt existing utilities without permission and without making arrangements to provide temporary utility services.
   1. Notify Engineer not less than 7 working days in advance of proposed utility interruption.
   2. Do not proceed without written permission from the Engineer.

D. Cut pipe ends square, ream pipe and tube ends to full pipe diameter, remove burrs. Use only equipment specifically designed for pipe cutting. The use of chisels or hand saws will not be permitted. Grind edges smooth with beveled end for push-on connections.

E. Remove scale and dirt on inside and outside before assembly.

F. Prepare pipe connections to equipment with flanges or unions.

3.3 BEDDING

A. Excavate pipe trench in accordance with Section 31 23 17 for Work of this Section. Hand trim excavation for accurate placement of pipe to elevations indicated on Drawings.

B. Dewater excavations to maintain dry conditions and preserve final grades at bottom of excavation.

C. Provide sheeting and shoring in accordance with Section 31 23 17.

D. Place bedding material at trench bottom, level fill materials in one continuous layer not exceeding 6 inches compacted depth; compact to 95 percent maximum density per ASTM D1557.

E. Backfill around sides and to top of pipe with cover fill; tamp in place and compact to 95 percent maximum density per ASTM D1557.

F. Maintain optimum moisture content of fill material to attain required compaction density.

3.4 INSTALLATION - PIPE

A. Install ductile iron pipe and fittings in accordance with AWWA C600.

B. Install polyethylene pipe and fittings where drawings specify horizontal directional drilling. Install pipe in accordance with Section 33 05 24, ASTM D2774 and AWWA M55.
   1. Join polyethylene pipe and fittings using the heat fusion procedure in accordance with ASTM F2620 and AWWA M55.
   2. Provide polyethylene mechanical joint transition fitting for connection to ductile iron pipe and fittings.
   3. At transition to ductile iron pipe and fittings, provide concrete thrust block or restrain ductile iron pipe in accordance with AWWA M55.
   4. Install tracer wire parallel to polyethylene pipe. Connect to adjacent ductile iron pipe and fittings. Ensure electrical conductivity is continuous between ductile iron pipe segments.

C. Handle and assemble pipe in accordance with manufacturer's instructions and as indicated on Drawings.

D. Connect continuity straps in accordance with manufacturer's instructions. Test for electrical conductivity of each joint by measuring resistance with digital micro ohm meter.

E. Steel Rods, Bolt, Lugs, and Brackets: Coat buried steel with one coat of coal tar coating before backfilling.

F. Maintain 10 ft horizontal and 18 inches vertical separation of water main from sewer piping.

G. Install pipe to indicated elevation.

H. Flanged Joints: Do not use in underground installations except within structures.

I. Route pipe in straight line. Relay pipe that is out of alignment or grade.

J. Install pipe with no high points except where indicated on Drawings. If unforeseen field conditions arise which necessitate high points, seek direction from Engineer regarding hydrant locations or air release valves.

K. Install pipe to have bearing along entire length of pipe. Excavate bell holes to permit proper joint installation. Do not lay pipe in wet or frozen trench.

L. Prevent foreign material from entering pipe during placement.

M. Install pipe to allow for expansion and contraction without stressing pipe or joints.

N. Close pipe openings with watertight plugs during work stoppages.

O. Install access fittings to permit disinfection of water system performed under Section 33 13 00.

P. Establish elevations of buried piping with not less than 5 ft of cover. Measure depth of cover from final surface grade to top of pipe barrel.

Q. Install ball markers at tees, crosses, plugs and horizontal bends.
   1. Provide ball markers to Engineer for programming prior to installation.
   2. Attach to filling anchor bolt with plastic cable tie; provide sufficient tie length and position ball marker no deeper than 3 feet below finished grade. Remove identification tag and attach to as-built drawings noting type and size of fitting.

3.5 INSTALLATION - TAPPING SLEEVES

A. Install tapping sleeves in accordance with Drawings and in accordance with manufacturer's instructions.

3.6 INSTALLATION - VALVES

A. Install valves in conjunction with pipe laying; set valves plumb.

B. Provide restrained joints on each end of valves.

C. Provide buried valves with valve boxes installed flush with finished grade.

3.7 INSTALLATION – FIRE HYDRANTS

A. Install fire hydrants; provide support blocking and drainage aggregate. Inform engineer of any groundwater encountered at hydrant locations. Where directed by Engineer, plug drain holes due to high groundwater.

B. Install valve in each hydrant supply line.

C. Set hydrants plumb with pumper nozzle facing roadway.

D. Set hydrants with centerline of pumper nozzle 18 to 22 inches above finished grade (safety flange 2 to 6 inches above grade).

E. Provide restrained joints at hydrant, valve, fittings and pipe joints of hydrant lead.

F. After hydrostatic testing, flush hydrants and check for proper drainage. Pump out hydrants with plugged drain holes.

3.8 POLYETHYLENE ENCASEMENT

A. Encase piping in polyethylene where to prevent contact with surrounding backfill material.

B. Install in accordance with AWWA C105.

C. Terminate encasement 6 inches below grade at hydrants and valve boxes..

3.9 THRUST RESTRAINT

A. Install joint restraining glands on all mechanical joint ends for hydrants, valves, and fittings

B. Install joint restraining harnesses for push on joint pipe according to Schedules.

C. Install joint restrains in accordance with manufacturer's instructions.

D. Protect metal restrained joint components against corrosion by applying a coal tar or bituminous coating.

E. Concrete thrust blocks are not permitted unless approved by Engineer.

3.10 SERVICE CONNECTIONS

A. Install service connections in accordance with Section 33 12 13.

3.11 BACKFILLING

A. Measure and record the distance between all fittings, valves, and hydrants prior to backfill.

B. Backfill around sides and to top of pipe in accordance with Section 31 23 17.

C. Maintain optimum moisture content of bedding material to attain required compaction density.

3.12 SEQUENCE OF TESTING

A. Conduct flushing, testing, and disinfection in the following sequence:
   1. High Velocity Flush (according to part 3.3 below)
   2. Hydrostatic Pressure and Leakage Testing (according to part 3.4 below)
   3. Disinfection (according to Section 33 13 00)
   4. Disinfectant Flush (according to Section 33 13 00)
   5. Bacteriological Testing (according to Section 33 13 00)
   6. Connection to existing watermain (according to part 3.8 below)

3.13 HIGH VELOCITY FLUSH

A. Review proposed configuration and flushing procedure with engineer to verify compliance with the following standards:
   1. Minimum Velocity: 2.5 feet per second
   2. Minimum Duration: until 2 times the volume of the flushed watermain has been discharged.

B. Provide and install all temporary appurtenances necessary to inject flushing water. This may include a temporary hydrant and fire hose if needed to achieve adequate flow rate.

C. Review proposed water source, configuration and flushing procedure with Engineer.

D. Notify water department.

E. Conduct high velocity flush to remove any debris and contaminants which may have entered pipe during construction.

F. Protect discharge from erosion and flooding

3.14 HYDROSTATIC PRESSURE AND LEAKAGE TESTING - DUCTILE IRON PIPE

A. Pressure test system to 150 psi. Repair leaks and re-test.
   1. After completion of pipeline installation, including backfill, but prior to final connection to existing system, conduct, in presence of Engineer, concurrent hydrostatic pressure and leakage tests in accordance with AWWA C600.
   2. Test Pressure: Not less than 200 psi or 50 psi in excess of maximum static pressure, whichever is greater.
   3. Conduct hydrostatic test for at least two-hour duration.
   4. Fill section to be tested with water slowly, expel air from piping at high points. Install corporation cocks at high points. Close air vents and corporation cocks after air is expelled. Raise pressure to specified test pressure.
   5. Observe joints, fittings and valves under test. Remove and renew cracked pipe, joints, fittings, and valves showing visible leakage. Retest.
   6. Correct visible deficiencies and continue testing at same test pressure for additional 2 hours to determine leakage rate. Maintain pressure within plus or minus 5.0 psig of test pressure. Leakage is defined as quantity of water supplied to piping necessary to maintain test pressure during period of test.
   7. Compute maximum allowable leakage by the following formula:

$L = (SD\sqrt{P})/C$
L = allowable leakage rate, in gallons per hour*
S = length of pipe tested, in feet
D = nominal diameter of pipe, in inches
P = average test pressure during hydrostatic test, in psig
C = 148,000
When pipe under test contains sections of various diameters, calculate allowable leakage from sum of computed leakage for each size.
*note: for a 2 hour test, multiply "L" by 2 to get the allowable leakage volume in gallons.

8. When test of pipe indicates leakage greater than allowed, locate source of leakage, make corrections and retest until leakage is within allowable limits. Correct visible leaks regardless of quantity of leakage.

3.15 HYDROSTATIC PRESSURE AND LEAKAGE TESTING - POLYETHYLENE PIPE

A. Pressure test system. Repair leaks and re-test.
1. After completion of pipeline installation, including backfill, but prior to final connection to existing system, conduct, in presence of Engineer, concurrent hydrostatic pressure and leakage tests in accordance with ASTM F2164 and AWWA M55.
2. Test pressure: 1.5 times the design working pressure at the lowest point in the test section. Do not exceed 1.5 times the pressure class of the pipe.
3. Isolate polyethylene piping from ductile iron piping and test separately.
4. Fill section to be tested 24 hours prior to conducting test. Fill with water slowly, expel air from piping at high points.
5. Raise pressure to specified test pressure. Supply makeup water as needed to maintain test pressure.
6. Observe joints, fittings and valves under test. Remove and renew cracked pipe, joints, fittings, and valves showing visible leakage. Retest.
7. After four hours discontinue supply of makeup water. Continue to monitor pressure for up to four additional hours.
8. If pressure remains within 5 percent of the test pressure for a one hour period, leakage is not indicated.
9. If test is not completed within 8 hours, depressurize piping. Wait a minimum of 8 hours prior to retesting.
10. When test of pipe indicates leakage, locate source of leakage, make corrections and retest until leakage is no longer indicated. Correct visible leaks regardless of quantity of leakage.

3.16 DISINFECTION OF POTABLE WATER PIPING SYSTEM

A. Flush and disinfect system in accordance with Section 33 13 00.

3.17 CONNECTION TO EXISTING WATERMAIN

A. Before cutting or tapping existing watermain, determine if new configuration will increase required length of joint restraints on existing watermain. If additional joint restraints on existing watermain are required according to schedules, install joint restraints on existing watermain, or construct thrust block according to standard drawings.

B. Make connection to existing watermain after disinfection and bacteriological testing has been completed in accordance with Section 33 13 00.

C. Connect new watermain to existing watermain in accordance with AWWA C651.

D. Connection to existing watermain shall be done only in the presence of City water department representatives.

E. Exercise sanitary construction practices to avoid contamination during this work.

F. Immediately after making connection, flush both the new and existing mains from the nearest hydrant.

3.18 FIELD QUALITY CONTROL

A. Section 01 40 00 - Quality Requirements.

B. Owner's representative will perform laboratory testing of bedding material to determine gradation in accordance with ASTM C117 and ASTM C136.

C. Owner's representative will perform testing of bedding material to determine maximum density in accordance with ASTM D1557 or Michigan Cone Method.

D. Owner's representative will perform in place compaction tests of bedding and backfill material in accordance with the following:
   1. Density Tests: ASTM D2922.
   2. Moisture Tests: ASTM D3017.

E. Frequency of Tests: At each compacted bedding and backfill layer, one test for each 150 feet or less of trench length. Additional testing may be required at the discretion of the Engineer.

F. When tests indicate Work does not meet specified requirements, remove Work, replace and retest.

3.19 SCHEDULES

A. Joint Restraints:

Length of Pipe Requiring Joint Restraints							
Pipe Diameter	Tees, 90˚ bends	45˚ bends	22 1/2˚ bends	11 1/4˚ bends	Dead Ends	Reducers (one size)	**
6	46	19	9	5	117	62	91
8	59	25	12	6	149	62	79
12	83	35	18	9	214	115	172
16	106	45	22	10	275	118	158
20	128	53	26	13	334	118	149

** If straight run of pipe on small side of reducer exceeds this value, then no restrained joints needed.

Required length of restrained joint pipe shown above is based on Class II backfill compacted to 95% maximum density, and polyethylene encasement. If polyethylene encasement is not required, reduce required length of restrained joint pipe by factor of 0.70.

3.20 STANDARD DRAWINGS

A. Thrust Block and Typical Connection Detail

B. Hydrant Installation

THRUST BLOCK AND TYPICAL WATERMAIN CONNECTION

TOP VIEW

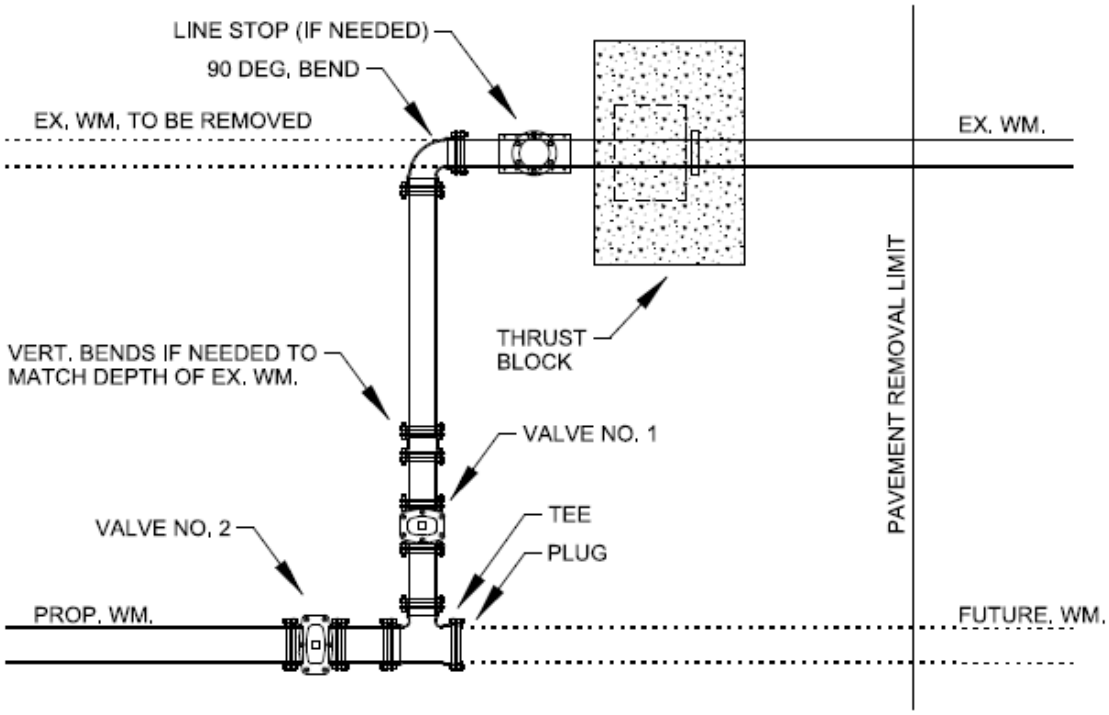

END VIEW

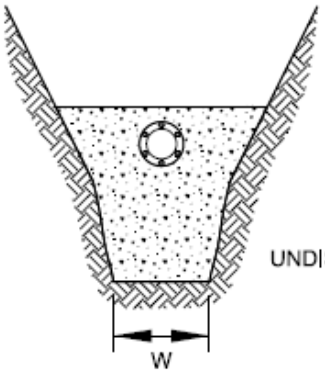

SIDE VIEW

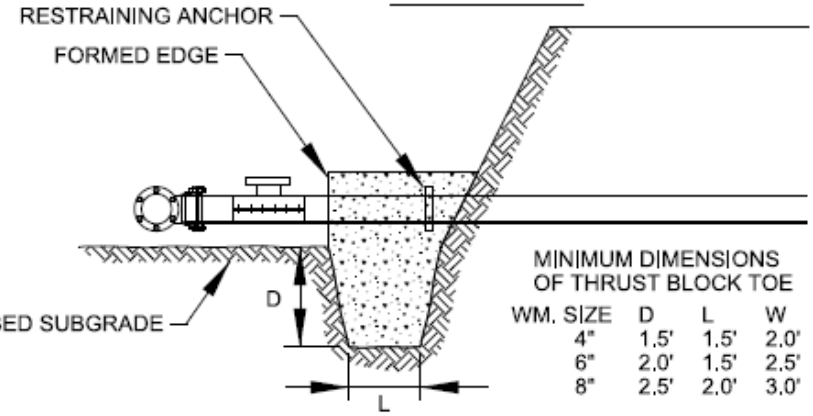

MINIMUM DIMENSIONS OF THRUST BLOCK TOE

WM. SIZE	D	L	W
4"	1.5'	1.5'	2.0'
6"	2.0'	1.5'	2.5'
8"	2.5'	2.0'	3.0'

THRUST BLOCK DIMENSIONS SHOWN ARE BASED ON SOFT CLAY SUBGRADE (ASSUMED BEARING CAPACITY OF 1,000 PSF). ENGINEER SHALL INSPECT SUBGRADE PRIOR TO THRUST BLOCK INSTALLATION AND MAY ORDER ALTERATIONS AS A RESULT OF SUBGRADE INSPECTION.

SIZE OF TEE BRANCH, VALVE NO. 1, AND ALL PIPE AND FITTINGS BETWEEN TEE AND EX. WATERMAIN SHALL MATCH SIZE OF EX. WATERMAIN. SIZE OF TEE RUN AND VALVE NO. 2 TO MATCH SIZE OF PROP. WATERMAIN.

RESTRAINING ANCHOR: USE MEGALUG TYPE MID SPAN PIPE RESTRAINT BOLTED ON EX. PIPE.

VALVE CONFIGURATION SHOWN IS FOR LOOPED WATERMAIN. WHERE THE EXISTING WATERMAIN IS A DEAD END, VALVE NO. 2 SHOULD BE LOCATED ON THE OPPOSITE RUN OF THE TEE. WHERE DESCREPANCIES EXIST BETWEEN THIS TYPICAL AND PROJECT PLANS, VALVE LOCATIONS SHALL BE CONSTRUCTED ACCORDING TO PROJECT PLANS.

HYDRANT INSTALLATION

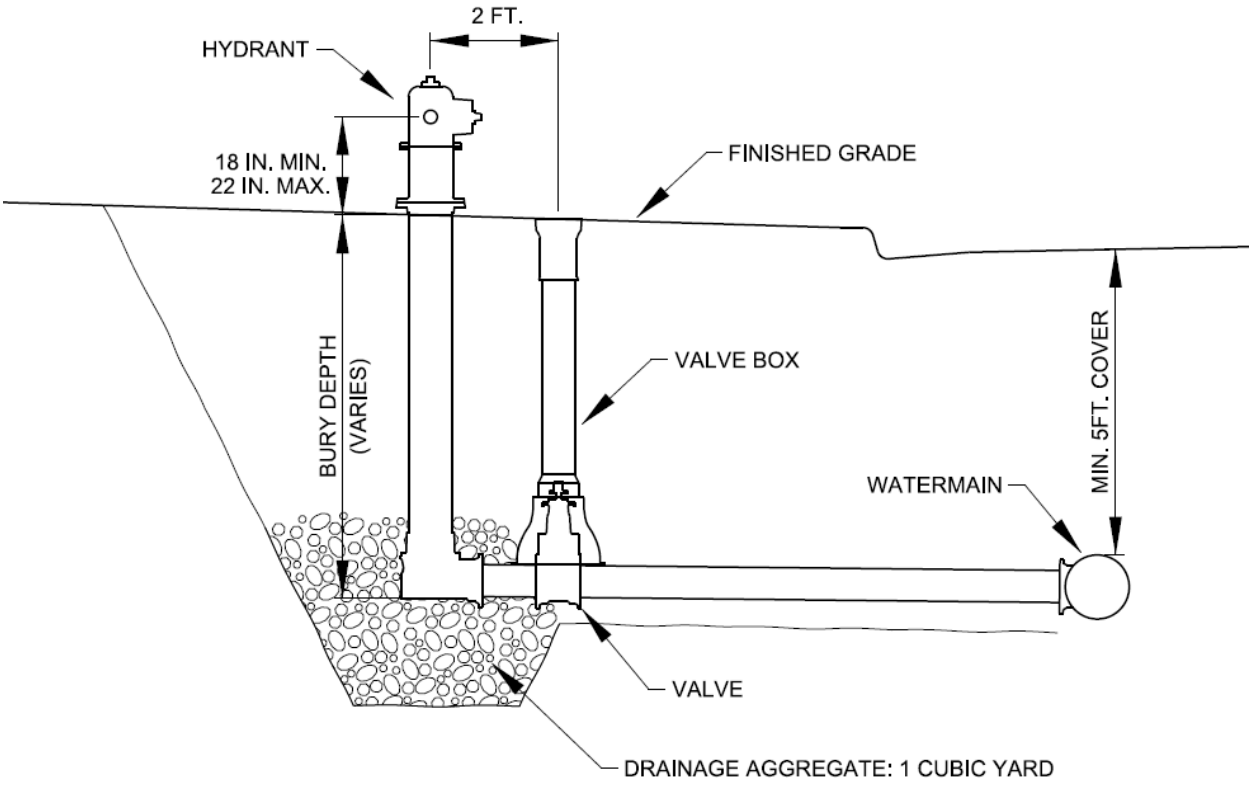

END OF SECTION

SECTION 33 12 13

WATER SERVICE CONNECTIONS

PART 1 GENERAL

1.1 SUMMARY

A. Section Includes:
1. Pipe and fittings for domestic water service connections to buildings.
2. Corporation stop assembly.
3. Curb stop assembly.
4. Meter setting equipment.
5. Bedding and cover materials.

B. Related Sections:
1. Section 31 23 33 - Trenching and Backfilling
2. Section 33 11 13 - Public Water Utility Distribution Piping
3. Section 33 13 00 - Disinfecting of Water Utility Distribution

1.2 PRICE AND PAYMENT PROCEDURES - UNIT PRICES

A. Water Service, __ inch:
1. Basis of Measurement: Foot
2. Basis of Payment: Includes pipe and fittings, corporation stop, trenching, bedding, backfilling, compaction, and disinfection.

B. Curb Stop, __ inch:
1. Basis of Measurement: Each
2. Basis of Payment: Includes curb stop, curb box and cover, trenching, bedding, backfilling, and compaction.

C. Meter Pit, __ inch:
1. Basis of Measurement: Each
2. Basis of Payment: Includes meter pit, frame and cover, angle ball valve, angle meter coupling, trenching, aggregate, backfilling, compaction, and miscellaneous fittings required to connect to existing customer plumbing.
3. Basis of Applications: This pay item will apply to all water services where existing customer plumbing is reconnected with a new pit meter.

1.3 REFERENCES

A. ASTM International:
1. ASTM A48/A48M - Standard Specification for Gray Iron Castings
2. ASTM A395 - Standard Specification for Ferritic Ductile Iron Pressure-Retaining Castings for Use at Elevated Temperatures
3. ASTM A536 - Standard Specification for Ductile Iron Castings

4. ASTM B62 - Standard Specification for Composition Bronze or Ounce Metal Castings
5. ASTM B88 - Standard Specification for Seamless Copper Water Tube
6. ASTM C117 - Standard Test Method for Materials Finer than 75-µm (No. 200) Sieve in Mineral Aggregates by Washing
7. ASTM C136 - Standard Test Method for Sieve Analysis of Fine and Coarse Aggregates
8. ASTM D1557 - Standard Test Methods for Laboratory Compaction Characteristics of Soil Using Modified Effort (56,000 ft-lbf/ft3)
9. ASTM D2922 - Standard Test Methods for Density of Soil and Soil-Aggregate in Place by Nuclear Methods (Shallow Depth)
10. ASTM D3017 - Standard Test Method for Water Content of Soil and Rock in Place by Nuclear Methods (Shallow Depth)
11. ASTM F2306/F2306M – Standard Specification for 12 to 60 in. Annular Corrugated Profile-Wall Polyethylene (PE) Pipe and Fittings for Gravity-Flow Storm Sewer and Subsurface Drainage Applications
12. Metals and Alloys in the Unified Numbering System (UNS), 12th Edition

B. American Water Works Association:
1. AWWA C600 - Installation of Ductile-Iron Water Mains and Their Appurtenances
2. AWWA C800 - Underground Service Line Valves and Fittings
3. AWWA M6 - Water Meters - Selection, Installation, Testing, and Maintenance

C. Michigan Department of Transportation (MDOT):
1. MDOT 2012 Standard Specifications for Construction
2. MDOT Density Testing and Inspection Manual, Current Edition

1.4 SUBMITTALS

A. Section 01 33 00 - Submittal Procedures: Requirements for submittals.

B. Product Data: Submit pertinent data for pipe materials, pipe fittings, corporation stop assemblies, curb stop assemblies, meter setting equipment, service saddles, and accessories.

C. Manufacturer's Certificate: Certify products meet or exceed specified requirements.

1.5 CLOSEOUT SUBMITTALS

A. Section 01 70 00 - Execution and Closeout Requirements: Project Record Documents.

B. Project Record Documents: Record actual locations of service lines, curb stops and connections. For each service record:
1. Tap: Distance from the corporation stop to nearest valve or fitting on water main, measured along the water main.
2. L: Length of the service line from the corporation stop to the curb stop or meter pit, measured along the service line.

3. Tail: Length of the service line beyond the curb stop for services stubbed for future connection, measured along the service line.
4. Two witness dimensions from the curb stop box to a permanent structure.
   a. Use manholes, catch basins, valves, hydrants, or property corners.
   b. Do not witness to trees or building corners.

C. Identify and describe unexpected variations to subsoil conditions or discovery of uncharted utilities.

1.6 QUALITY ASSURANCE

A. Qualifications:
1. Manufacturers: Company specializing in manufacturing products specified in this section.
2. Installers: Company specializing in performing work of this section with minimum three years documented experience.

B. Preconstruction Testing:
1. Section 01 40 00 - Quality Requirements: Testing and Inspections by Owner.
2. Notify Engineer minimum two weeks prior to scheduled delivery of bedding and cover materials.
3. Allow Owner's representative access to bedding and cover materials source for sampling and testing.
4. Confirm test results indicate conformance with specifications prior to delivery to site.
5. Owner reserves the right to collect and test additional samples of bedding and cover materials after delivery to site.

C. Single Source Responsibility: Furnish bedding and cover materials from single source throughout the Work.

1.7 DELIVERY, STORAGE, AND HANDLING

A. Section 01 60 00 - Product Requirements: Product Delivery Requirements and Product Storage and Handling Requirements.

B. During loading, transporting, and unloading of materials and products, exercise care to prevent any damage.

C. Store products and materials off ground and under protective coverings and custody, away from walls and in manner to keep clean and in good condition until used.

PART 2 PRODUCTS

2.1 WATER PIPING AND FITTINGS

A. Manufacturers:
1. Fittings:

a. A.Y. McDonald Mfg. Co.
b. Substitutions: Not Permitted.

B. Copper Tubing: ASTM B88, Type K, annealed.
1. Size: 1 inch or 2 inch as indicated on Drawings.

C. Fittings:
1. Brass or red brass alloys:
a. In contact with potable water: "No-Lead Brass" conforming to UNS Copper Alloy No. C89520 or C89833.
b. Not in contact with potable water: Conforming to ASTM B62, UNS Copper Alloy No. C83600.
2. Outlet end suitable for service pipe specified; "Mac-Pak" compression joint.
3. Stamped or cast marking identifying product as "No Lead" or "NL".

2.2 CORPORATION STOP ASSEMBLY

A. Products:
1. Corporation Stops:
a. A.Y. McDonald Mfg. Co.: Model 74701B-22.
b. Substitutions: Not Permitted.
2. Service Saddles:
a. A.Y. McDonald Mfg. Co.: Model 4855A.
b. Ford Meter Box Company, Inc.: Model FCD202.
c. Mueller Company: Model DR2S.
d. Romac Industries, Inc.: Style 202NS.
e. Substitutions: Not Permitted.

B. Corporation Stops:
1. Brass or red brass alloys:
a. In contact with potable water: "No-Lead Brass" conforming to UNS Copper Alloy No. C89520 or C89833.
b. Not in contact with potable water: Conforming to ASTM B62, UNS Copper Alloy No. C83600.
2. Inlet end threaded for tapping according to AWWA C800.
3. Outlet end suitable for service pipe specified; "Mac-Pak" compression joint.
4. Stamped or cast marking identifying product as "No Lead" or "NL".

C. Service Saddles:
1. Double strap type, designed to hold pressures in excess of pipe working pressure.
2. Ductile iron body conforming to ASTM A395 or ASTM A536, epoxy or nylon coated.
3. Outlet boss with AWWA threads matching corporation stop.
4. Stainless steel straps and nuts.

2.3 CURB STOP ASSEMBLY

A. Manufacturers:
1. Curb Stops:

a. A.Y. McDonald Mfg. Co.: Model 76100-22.
b. Substitutions: Not Permitted.

2. Self-Draining Curb Stops:
a. A.Y. McDonald Mfg. Co.: Model 76070-22.
b. Substitutions: Not Permitted.

3. Curb Boxes and Covers:
a. A.Y. McDonald Mfg. Co.: Model 5605 or 5606.
b. Substitutions: Not Permitted.

B. Curb Stops:
1. Brass or red brass alloys:
a. In contact with potable water: "No-Lead Brass" conforming to UNS Copper Alloy No. C89520 or C89833.
b. Not in contact with potable water: Conforming to ASTM B62, UNS Copper Alloy No. C83600.
2. Ball type valve.
3. Positive pressure sealing.
4. Ends suitable for service pipe specified; "Mac-Pak" compression joint.
5. Stamped or cast marking identifying product as "No Lead" or "NL".
6. Self-draining curb stops shall provide positive shutoff from inlet direction only and shall open clockwise.

C. Curb Boxes and Covers:
1. Domestic cast iron body, two piece, screw type.
2. Arch Pattern Base.
3. Lid: Cast iron, pentagon locking plug, marked "WATER".
4. Size:
a. 1-1/2 inch upper for 1 inch and smaller curb stops.
b. 2 inch upper for curb stops larger than 1 inch.
5. Protective Coating: Coal tar epoxy or bituminous coating.

2.4 METER SETTING EQUIPMENT

A. Products:
1. Angle Ball Valves:
a. A.Y. McDonald Mfg. Co.: Model 74602B-22.
b. Substitutions: Not Permitted.
2. Angle Meter Couplings:
a. A.Y. McDonald Mfg. Co.: Model 74783S-22 or 74783F-22.
b. Substitutions: Not Permitted.
3. Meter Pit Lids:
a. EJ Group, Inc.: Model 2890 or 2910 with open pick slot.
b. Substitutions: Not Permitted.

B. Angle Ball Valves:
1. Brass or red brass alloys:
a. In contact with potable water: "No-Lead Brass" conforming to UNS Copper Alloy No. C89520 or C89833.

b. Not in contact with potable water: Conforming to ASTM B62, UNS Copper Alloy No. C83600.

2. Ball type valve, full port.
3. Lockwing on operating device.
4. Inlet end suitable for service pipe specified; "Mak-Pak" compression joint.
5. Outlet End:
   a. Meter swivel nut for meters smaller than 1-1/2 inch.
   b. Flange outlet for meters 1-1/2 inch and larger.
6. Stamped or cast marking identifying product as "No Lead" or "NL".

C. Angle Meter Couplings:
1. Brass or red brass alloys:
   a. In contact with potable water: "No-Lead Brass" conforming to UNS Copper Alloy No. C89520 or C89833.
   b. Not in contact with potable water: Conforming to ASTM B62, UNS Copper Alloy No. C83600.
2. Inlet End:
   a. Meter swivel nut for meters smaller than 1-1/2 inch.
   b. Flange outlet for meters 1-1/2 inch and larger.
3. Outlet end suitable for service pipe specified; "Mak-Pak" compression joint.
4. Stamped or cast marking identifying product as "No Lead" or "NL".

D. Meter Pits:
1. Riser section constructed of annular corrugated profile wall polyethylene pipe conforming to ASTM F2306/F2306M.
2. Size:
   a. 18 inch diameter for 3/4 inch meters.
   b. 24 inch diameter for 1 inch meters.
3. Frames and Covers: ASTM A 48/A48M, Class 35B gray cast iron construction.
   a. Machined flat bearing surfaces.
   b. Live Load Rating: 16,000 pounds.
   c. Finish: Uncoated.

E. Drainage Aggregate: MDOT 2012 Standard Specifications for Construction, Section 902.03.
1. Course Aggregate Class 6A per Tables 902-1 and 902-2.
2. The use of crushed concrete is prohibited within 100 feet of any water course (stream, river, county drain, etc.) and lake, regardless of the application or location of the water course or lake relative to the project limits.

2.5 UNDERGROUND PIPE MARKERS

A. Products:
1. Tracer Wire:
   a. NEPTCO, Inc.: Trace-Safe® wire, connectors, and locating clips.
   b. Substitutions: Not permitted.
2. Ball Markers:
   a. 3M: EMS iD Ball Marker - Water 1423-XR/iD.
   b. Substitutions: Not permitted

B. Tracer Wire: Water blocking tracer wire with 30 mil abrasion resistant HDPE outer jacket encasing 1,800 pound tensile strength polyester strength element and 19 AWG solid copper conductor, magnetically detectable. Provide water blocking connectors and tracing clips from tracer wire manufacturer.
   1. Color: Blue.

C. Ball Markers: Round, high-density watertight polyethylene shell, impervious to minerals, chemicals, and temperature extremes normally found in the underground environment. RFID marker shall be encased within shell in a biodegradable mixture of propylene glycol and water.
   1. Color: Blue.

2.6 BEDDING AND COVER MATERIALS

A. Pipe Bedding and Cover: MDOT 2012 Standard Specifications for Construction, Section 902.07.
   1. Class III Granular Material per Table 902-3.
   2. Class II Granular Material per Table 902-3 may be substituted for Class III Granular Material with approval of Engineer

B. Suitable on site material may be utilized as pipe bedding and cover with approval of Engineer.

PART 3 EXECUTION

3.1 EXAMINATION

A. Section 01 30 00 - Administrative Requirements: Verification of existing conditions before starting work.

B. Verify building service connection and municipal utility water main size, location, and invert are as indicated on Drawings.

C. Verify location and layout of proposed service lines, curb stops and meter pits relative to existing or future service line connections, other utilities, sidewalks, driveways, and trees. Notify Engineer of potential conflicts.

3.2 PREPARATION

A. Cut pipe ends square, ream pipe and tube ends to full pipe diameter, remove burrs.

B. Remove scale and dirt on inside and outside before assembly.

3.3 INSTALLATION - CORPORATION STOP ASSEMBLY

A. Make connection for each different kind of water main using suitable materials, equipment and methods approved by the Engineer.

B. Screw corporation stops directly into tapped and threaded iron main at 10 and 2 o'clock position on main's circumference; locate corporation stops at least 12 inches apart longitudinally and staggered.

C. Provide service saddles for corporation stops larger than 1 inch if water main is less than 16 inch diameter.

D. Use proper seals or other devices so no leaks are left in water mains at points of tapping; do not backfill and cover service connection until approved by Engineer.

3.4 BEDDING AND COVER

A. Excavate pipe trench in accordance with Section 31 23 33 Trenching and Backfilling. Hand trim excavation for accurate placement of pipe to specified depth.

B. Dewater excavations to maintain dry conditions and preserve final grades at bottom of excavation.

C. Provide sheeting and shoring in accordance with Section 31 23 33 Trenching and Backfilling.

D. Place bedding material at trench bottom. Level fill materials in one continuous layer not exceeding 6 inches compacted depth. Compact to 95 percent maximum density per ASTM D1557.

E. Backfill evenly around sides of pipe and to top of pipe with cover material. Place cover material to a minimum depth of one pipe diameter above utility but not less than 6 inches. Compact in maximum lifts of 12 inches to 95 percent maximum density per ASTM D1557. When placing cover around plastic pipe, limit maximum lift thickness of first lift to one half of pipe diameter.

F. Maintain optimum moisture content of bedding and cover materials to attain required compaction density.

3.5 INSTALLATION - PIPE AND FITTINGS

A. Maintain minimum 2 feet horizontal separation between parallel water service lines.

B. Maintain 5 foot horizontal and 12 inches vertical separation of water service line from sewer piping.

C. Route pipe in straight line.

D. Install pipe to allow for expansion and contraction without stressing pipe or joints.

E. Establish elevations of buried piping with not less than 5 feet of cover.

F. Where feasible, use continuous pipe without fittings between corporation stop and curb stop.

G. Backfill trench in accordance with Section 31 23 33 Trenching and Backfilling.

H. Install tracer wire continuous above top of water service pipe, buried 24 inches below finished grade. Coordinate placement with backfilling operations. Connect water service tracer wire to water main tracer wire with main to lateral connector. Continue tracer wire up side of meter pit and terminate with locating clip beneath meter pit cover. If service does not include meter pit, continue tracer wire up side of curb box and terminate with locating clip attached to exterior of curb box.

3.6 INSTALLATION - CURB STOP ASSEMBLY

A. Set curb stops on solid bearing.

B. Center and plumb curb box over curb stops. Set box cover flush with finished grade.

C. Install ball marker at curb box. Attach to curb box immediately below cover with plastic cable tie. Remove identification tag and attach to as-built drawings noting service address. Provide ball markers to Owner for programming two weeks prior to installation. Owner will program ball marker with size and type of service.

3.7 INSTALLATION - WATER METERS

A. Install meters in accordance with AWWA M6, with isolating valve on inlet.

B. Backfill above service line to a depth 30 inches below finished grade. Place 6 inches of drainage aggregate on compacted backfill to support meter pit. Install 24-inch long riser section to serve as meter pit. Install cast iron frame and cover to enclose meter pit.

C. Install angle ball valves and angle meter couplings on service line as required to mount meter. Align angle ball valve and angle meter coupling to permit meter to be install horizontally.

D. Locate meter pits in areas not subject to vehicular traffic.

3.8 FIELD QUALITY CONTROL

A. Section 01 40 00 - Quality Requirements: Testing and Inspections by Owner.

B. Visually inspect pipe, fittings, valves and connections for leakage prior to backfilling.

C. Geotechnical Tests:
1. Provide Owner’s representative with samples or access to stockpiles upon request.
2. Owner’s representative will perform laboratory testing of bedding and cover materials to determine gradation in accordance with ASTM C117 and ASTM C136.
3. Owner’s representative will perform testing of bedding and cover materials to determine maximum density in accordance with ASTM D1557 or Michigan Cone Test.

4. Owner's representative will perform in place compaction tests of bedding and cover materials in accordance with the following:
   a. Density Tests: ASTM D2922.
   b. Moisture Tests: ASTM D3017.
5. Frequency of Tests: At each compacted bedding and cover layer, one test for each 150 feet or less of trench length. Additional testing may be required at the discretion of the Engineer.

D. When tests indicate Work does not meet specified requirements, remove Work, replace and retest.

3.9 SYSTEM STARTUP

A. Flush water services prior to connecting to existing customer piping.

3.10 STANDARD DRAWINGS

A. Standard Water Service and Meter Pit

B. Seasonal Water Services

STANDARD WATER SERVICE AND METER PIT

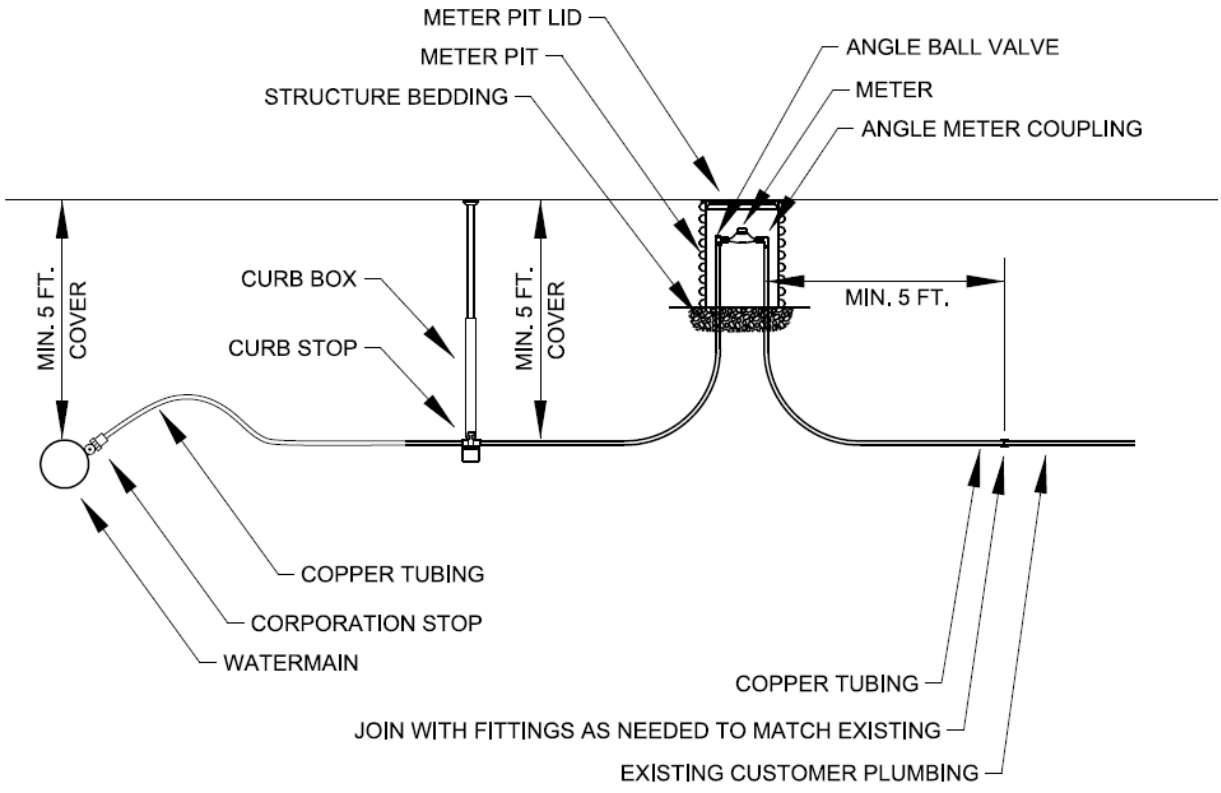

CONTRACTOR SHALL REINSTALL CUSTOMER'S EXISTING METER, ANGLE BALL VALVE, AND ANGLE METER COUPLING.

WHERE CUSTOMER PLUMBING DOES NOT EXIST, OMIT METER PIT AND INSTALL 6 INCH LONG CRIMPED COPPER STUB IN DOWNSTREAM END OF CURB STOP.

SEASONAL WATER SERVICES

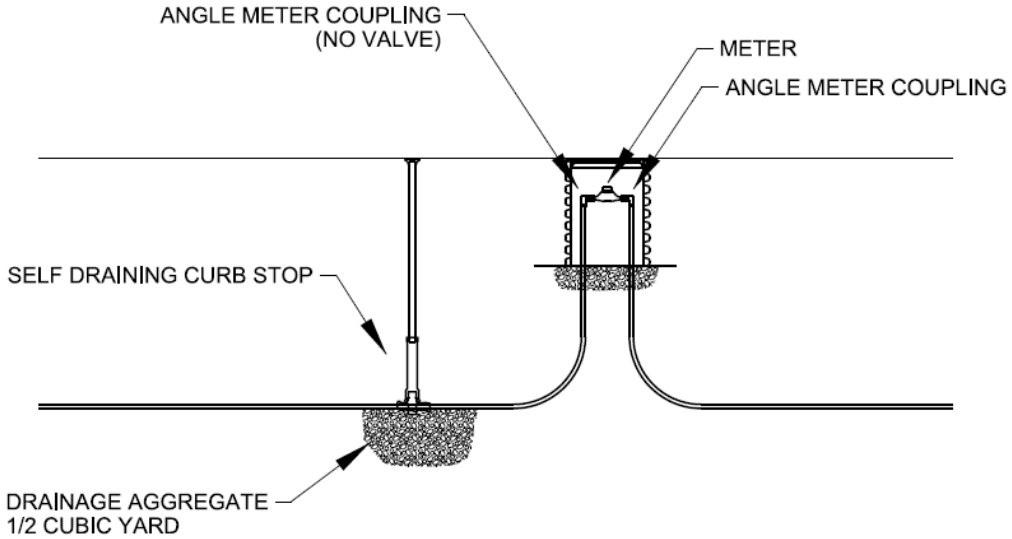

PERFORM ALL WORK ACCORDING TO STANDARD WATER SERVICE AND METER PIT DETAIL, EXCEPT AS MODIFIED HEREIN.

SELF DRAINING CURB STOP:
A.Y. MACDONALD MODEL NUMBER 76000-22
BALL VALVE WITH DRAIN PATH THROUGH BALL
HOUSING WITH OPEN DRAIN HOLE

END OF SECTION

SECTION 33 13 00

DISINFECTING OF WATER UTILITY DISTRIBUTION

PART 1 GENERAL

1.1 SUMMARY

A. Section includes disinfection of potable water distribution system; and testing and reporting results.

B. Related Sections:
1. Section 33 11 13 - Public Water Utility Distribution Piping
2. Section 33 12 13 - Water Service Connections

1.2 PRICE AND PAYMENT PROCEDURES - UNIT PRICES

A. Disinfection:
1. Basis of Measurement: Not applicable.
2. Basis of Payment: Payment for disinfecting, testing, and reporting test results for water utility distribution piping will be included in the price of constructing the water utility distribution piping.

1.3 REFERENCES

A. American Water Works Association:
1. AWWA B300 - Hypocholorites
2. AWWA C600 - Installation of Ductile-Iron Water Mains and Their Appurtenances
3. AWWA C651 - Disinfecting Water Mains

1.4 SUBMITTALS

A. Section 01 33 00 - Submittal Procedures: Requirements for submittals.

B. Product Data: Submit procedures, proposed chemicals, and treatment levels for review.

C. Flushing, Disinfection, and Sampling Plan: Submit for review.

D. Test Reports: Indicate results comparative to specified requirements.

E. Certificate: Certify cleanliness of water distribution system meets or exceeds specified requirements.

1.5 CLOSEOUT SUBMITTALS

A. Section 01 70 00 - Execution and Closeout Requirements: Project Record Documents.

B. Disinfection Report:
1. Type and form of disinfectant used.
2. Date and time of disinfectant injection start and time of completion.
3. Test locations.
4. Name of person collecting samples.
5. Initial and 24 hour disinfectant residuals in treated water in ppm for each outlet tested.
6. Date and time of flushing start and completion.
7. Disinfectant residual after flushing in ppm for each outlet tested.

C. Bacteriological Report:
1. Date issued, project name, and testing laboratory name, address, and telephone number.
2. Time and date of water sample collection.
3. Name of person collecting samples.
4. Test locations.
5. Initial and 24 hour disinfectant residuals in ppm for each outlet tested.
6. Coliform bacteria test results for each outlet tested.
7. Certify water conforms, or fails to conform, to bacterial standards of Michigan Department of Environmental Quality.
8. Include bacteriologist's signature on each test report.

D. Water Quality Certificate: Certify water conforms to quality standards of City of South Haven, suitable for human consumption.

1.6 QUALITY ASSURANCE

A. Qualifications:
1. Water Treatment Firm: Company specializing in disinfecting potable water systems with minimum three years documented experience.
2. Testing Laboratory: City of South Haven Water Filtration Plant.

B. Section 01 40 00 - Quality Requirements: Testing and Inspections by Contractor.

C. Perform Work in accordance with AWWA C651.

PART 2 PRODUCTS

2.1 DISINFECTION CHEMICALS

A. Chemicals: AWWA B300, Sodium or Calcium Hypochlorite.

PART 3 EXECUTION

3.1 EXAMINATION

A. Section 01 30 00 - Administrative Requirements: Verification of existing conditions before starting work.

B. Verify piping system has been cleaned, inspected, and pressure tested in accordance with Section 33 11 13 - Public Water Utility Distribution Piping.

3.2 PREPARATION

A. Prepare a flushing, disinfection, and sampling plan which identifies:
   1. Source location of flushing water.
   2. Method of connection to supply sufficient quantity of flushing water.
   3. Location of flushing discharge(s).
   4. Sequence of valve opening and closing to ensure complete flushing and disinfection of all segments.
   5. Location of sampling taps:
      a. Collect samples from each branch.
      b. Maximum spacing of 1000 feet.
   6. Description of equipment to be utilized.

3.3 DISINFECTION

A. Conduct disinfection in accordance with AWWA C651.

B. Provide and attach all equipment needed to perform the Work of this section.

C. Install temporary sampling taps at needed locations. Where feasible, locate taps at customer service connection to limit excess number of taps.

D. Minimum Chlorine Residuals:
   1. Initial Concentration: 25 ppm free available chlorine.
   2. Final Concentration: 10 ppm free available chlorine after 24 hours.

E. Inject Disinfection Chemicals into piping system by continuous feed method.
   1. Calculate injection rate based on water flow rate and required concentration.
   2. Begin flowing potable water through the new main from the beginning of the new main.
   3. Inject chemicals into watermain at a location not more than 10 feet downstream from the beginning of the new main.
   4. Measure chlorine residual at discharge. Adjust water flow rate or chemical feed rate as necessary to achieve initial concentration.

F. Stop flows.

G. Operate all valves, including hydrant valves, within the treated section, to ensure disinfection of the appurtenances.

H. Measure initial chlorine residual at each sampling location.

I. Wait 24 hours.

J. Measure final chlorine residual at each sampling location.

K. If final chlorine residual is below minimum:
   1. Repeat high velocity flush.
   2. Repeat disinfection.

3.4 DISINFECTANT FLUSH

A. Conduct flushing in accordance with AWWA C651.

B. Review proposed water source, configuration, and discharge location with Engineer.

C. Legally dispose of chlorinated water. When chlorinated discharge may cause damage to environment, apply neutralizing chemical to neutralize chlorine residual in water.

D. Flush heavily chlorinated water from entire system with potable water after completion of successful disinfection procedures and before bacteriological testing.
   1. Measure chlorine residual of supply water.
   2. Flush the full volume of the new watermain.
   3. Measure chlorine residual of the flushing discharge.
   4. Continue flushing until chlorine residual at discharge equals the supply water.

E. Protect discharge from erosion and flooding.

3.5 BACTERIOLOGICAL TESTING

A. Conduct bacteriological testing in accordance with AWWA C651.

B. Owner's representative will collect samples in sterile bottles supplied from testing laboratory, at each sampling location. Samples will be delivered to testing laboratory the same day.
   1. Provide access to the sampling location.
   2. Complete the form provided with the sample bottle.

C. Owner's representative will collect and submit repeat samples 24 hours after initial samples.

D. Report laboratory results to Engineer.

E. If laboratory results indicate presence of coliform bacteria:
   1. Repeat disinfection.
   2. Repeat bacteriological testing.

F. Pay for any additional laboratory testing due to failed test results.

G. Remove temporary sampling taps and install plugs or use sampling tap as customer water service connection.

3.6 FIELD QUALITY CONTROL

A. Section 01 40 00 - Quality Requirements: Testing and Inspections by Contractor.

END OF SECTION

SECTION 33 31 13

PUBLIC SANITARY UTILITY SEWERAGE PIPING

PART 1 GENERAL

1.1 SUMMARY

A. Section Includes:
1. Sanitary sewer pipe and fittings.
2. Underground pipe markers.
3. Wye branches, laterals, and fittings.
4. Cleanouts.
5. Concrete encasement and cradles.
6. Bedding and cover materials.

B. Related Sections:
1. Section 31 23 33 - Trenching and Backfilling
2. Section 33 01 30.13 - Sewer and Manhole Testing
3. Section 33 01 30.16 - TV Inspection of Sewer Pipelines
4. Section 33 05 13 - Public Manholes and Structures

1.2 PRICE AND PAYMENT PROCEDURES - UNIT PRICES

A. San. Sewer, PVC SDR __ , __ inch:
1. Basis of Measurement: Foot, measured from center of structure to center of structure.
2. Basis of Payment: Includes trenching, hand trimming excavation, pipe and fittings, bedding, backfill, compaction, and testing.

B. San. Sewer Service, __ inch:
1. Basis of Measurement: Foot
2. Basis of Payment: Includes trenching, hand trimming excavation, pipe and fittings, bedding, backfill, compaction, and testing.

C. San. Sewer Service, Cleanout:
1. Basis of Measurement: Each
2. Basis of Payment: Includes pipe and fittings, threaded cap, ball marker, and connection to existing service pipe or end cap.

D. Cleanout Riser Cover:
1. Basis of Measurement: Each
2. Basis of Payment: Includes cast iron cover over cleanout riser.
3. Basis of Application: This pay items will apply where cleanouts are located in paved areas.

E. Sewer Bypass Pumping:
1. Basis of Measurement: Lump Sum

2. Basis of Payment: Includes design, installation, operation, maintenance, and removal of all temporary work needed to maintain sewer service.
3. Basis of Application: This pay item will apply on contracts where provided on the Bid Form. On contracts where not provided on the Bid Form, the work of maintaining sewer service shall be considered included in other pay items.

1.3 REFERENCES

A. Abbreviations and Acronyms:
1. PVC: Poly(Vinyl Chloride)

B. Reference Standards:
1. American Association of State Highway and Transportation Officials:
   a. AASHTO M306 - Standard Specification for Drainage, Sewer, Utility, and Related Castings
2. ASTM International:
   a. ASTM A48/A48M - Standard Specification for Gray Iron Castings
   b. ASTM A536 - Standard Specification for Ductile Iron Castings
   c. ASTM C117 - Standard Test Method for Materials Finer than 75-µm (No. 200) Sieve in Mineral Aggregates by Washing
   d. ASTM C136 - Standard Test Method for Sieve Analysis of Fine and Coarse Aggregates
   e. ASTM C1173 – Standard Specification for Flexible Transitions Couplings for Underground Piping Systems
   f. ASTM D1557 - Standard Test Methods for Laboratory Compaction Characteristics of Soil Using Modified Effort (56,000 ft-lbf/ft3)
   g. ASTM D1784 - Standard Specification for Rigid Poly(Vinyl Chloride) (PVC) Compounds and Chlorinated Poly(Vinyl Chloride) (CPVC) Compounds
   h. ASTM D2321 - Standard Practice for Underground Installation of Thermoplastic Pipe for Sewers and Other Gravity-Flow Applications
   i. ASTM D2564 - Standard Specification for Solvent Cements for Poly(Vinyl Chloride) (PVC) Plastic Piping Systems
   j. ASTM D2855 - Standard Practice for the Two-Step (Primer and Solvent Cement) Method of Joining Poly(Vinyl Chloride) (PVC) or Chlorinated Poly(Vinyl Chloride) (CPVC) Pipe and Piping Components with Tapered Sockets
   k. ASTM D2922 - Standard Test Methods for Density of Soil and Soil-Aggregate in Place by Nuclear Methods (Shallow Depth)
   l. ASTM D3017 - Standard Test Method for Water Content of Soil and Rock in Place by Nuclear Methods (Shallow Depth)
   m. ASTM D3034 - Standard Specification for Type PSM Poly(Vinyl Chloride) (PVC) Sewer Pipe and Fittings
   n. ASTM D3212 - Standard Specification for Joints for Drain and Sewer Plastic Pipes Using Flexible Elastomeric Seals
   o. ASTM F477 - Standard Specification for Elastomeric Seals (Gaskets) for Joining Plastic Pipe
   p. ASTM F656 - Standard Specification for Primers for Use in Solvent Cement Joints of Poly(Vinyl Chloride) (PVC) Plastic Pipe and Fittings.

q. ASTM F1336 - Standard Specification for Poly(Vinyl Chloride) (PVC) Gasketed Sewer Fittings

3. Michigan Department of Transportation (MDOT):
   a. MDOT 2012 Standard Specifications for Construction
   b. MDOT Density Testing and Inspection Manual, Current Edition

1.4 SUBMITTALS

A. Section 01 33 00 - Submittal Procedures: Requirements for submittals.

B. Product Data: Submit pertinent data for sewer pipe and fittings, flexible couplings, cleanout caps and covers, and underground pipe markers.

C. Materials Source: Submit source location and names of material suppliers.

D. Manufacturer's Installation Instructions:
   1. Indicate special procedures required to install products specified.
   2. Submit detailed description of procedures for connecting.

E. Manufacturer’s Certificate: Certify products meet or exceed specified requirements.

1.5 CLOSEOUT SUBMITTALS

A. Section 01 70 00 - Execution and Closeout Requirements: Project Record Documents.

B. Project Record Documents: Accurately record actual locations of pipe runs, connections, manholes, and invert elevations.
   1. For all mains record length of pipe run, invert elevations and slope.
   2. For all laterals record:
      a. Y+: Distance from the downstream manhole to the wye fitting.
      b. E+: Distance measured along the lateral centerline to the lateral end.
      c. L: Perpendicular distance from the lateral end to main.
      d. Two witness dimensions from the cleanout to a permanent structure.
         1) Use manholes, catch basins, valves, hydrants, or property corners.
         2) Do not witness to trees or building corners.

C. Identify and describe any alterations made due to subsoil conditions, discovery of uncharted utilities, or unanticipated conditions.

D. Test Reports: Submit reports indicating field tests made and results indicating conformance or non-conformance with specifications.

1.6 QUALITY ASSURANCE

A. Qualifications:
   1. Manufacturers: Company specializing in manufacturing products specified in this section.
   2. Installers: Company specializing in performing work of this section with minimum three years documented experience.

B. Preconstruction Testing:
   1. Section 01 40 00 - Quality Requirements: Testing and Inspections by Owner.
   2. Notify Engineer minimum two weeks prior to scheduled delivery of bedding and cover materials.
   3. Allow Owner's representative access to bedding and cover materials source for sampling and testing.
   4. Confirm test results indicate conformance with specifications prior to delivery to site.
   5. Owner reserves the right to collect and test additional samples of bedding and cover materials after delivery to site.

C. Single Source Responsibility: Furnish bedding and cover materials from single source throughout the Work.

1.7 DELIVERY, STORAGE, AND HANDLING

A. Section 01 60 00 - Product Requirements: Product Delivery Requirements and Product Storage and Handling Requirements.

B. During loading, transporting, and unloading of materials and products, exercise care to prevent any damage.

C. Do not place pipe or pipe materials on private property or in areas obstructing pedestrian or vehicle traffic.

D. Block individual and stockpiled pipe lengths to prevent moving.

E. Do not place pipe flat on ground. Cradle to prevent point stress.

F. Store UV sensitive materials out of direct sunlight.

1.8 FIELD CONDITIONS

A. Verify field measurements and elevations are as indicated on Drawings.
   1. Measure invert elevations of existing downstream sewer at proposed connection point.
   2. Measure elevation of existing pipes at proposed crossing locations.
   3. Calculate proposed pipe slopes and verify clearance at crossings.
   4. Notify Engineer of any discrepancies from Drawings or identified elevation conflicts at crossing locations.

B. Conduct operations not to interfere with, interrupt, damage, destroy, or endanger integrity of surface or subsurface structures or utilities, and landscape in immediate or adjacent areas.

PART 2 PRODUCTS

2.1 SANITARY SEWER PIPE AND FITTINGS

A. Plastic Pipe: ASTM D3034, Type PSM Poly(Vinyl Chloride) (PVC); bell and spigot style rubber ring sealed gasket joints.
   1. Wall Thickness:
      a. SDR 35 for pipe buried 0-12 feet deep.
      b. SDR 26 for pipe buried over 12 feet deep.
   2. Joints: ASTM D3212, joints using elastomeric seals.
   3. Gaskets: ASTM F477, elastomeric gaskets.

B. Plastic Fittings: ASTM F1336, Poly(Vinyl Chloride) (PVC) gasketed sewer fittings; fabricated from SDR 26 pipe or molded.
   1. Joints: ASTM D3212, joints using elastomeric seals.
   2. Gaskets: ASTM F477, elastomeric gaskets.

2.2 FLEXIBLE COUPLINGS

A. Manufacturers:
   1. Fernco Inc.
   2. Mission Rubber Company LLC
   3. Substitutions: Section 01 60 00 - Product Requirements

B. Flexible Couplings: ASTM C1173, Resilient, chemical-resistant, elastomeric coupling with two stainless steel clamps, stainless steel screws and housings.

2.3 CLEANOUTS

A. Plastic Cleanouts: ASTM D3034, Type PSM Poly(Vinyl Chloride) (PVC) threaded cleanout adapter and plug; solvent cement joints.

B. Include PVC sewer pipe fitting and riser to cleanout of same material as sewer piping.

C. Primer: ASTM F656, purple.

D. Solvent Cement: ASTM D2564, medium-bodied.

2.4 CLEANOUT RISER COVERS

A. Products:
   1. EJ Group, Inc.: Model 1574.
   2. Substitutions: Section 01 60 00 - Product Requirements

B. ASTM A48/A48M, Class 35B gray cast iron and/or ASTM A536 ductile iron construction.
   1. Machined flat bearing surfaces.
   2. Live Load Rating: 40,000 lbs.
   3. Finish: Uncoated.

2.5 UNDERGROUND PIPE MARKERS

A. Products:
   1. Tracer Wire:
      a. NEPTCO, Inc.: Trace-Safe® wire, connectors, and locating clips.
      b. Substitutions: Not permitted.
   2. Ball Markers:
      a. 3M: EMS iD Ball Marker - Wastewater 1424-XR/iD.
      b. Substitutions: Not permitted

B. Tracer Wire: Water blocking tracer wire with 30 mil abrasion resistant HDPE outer jacket encasing 1,800 pound tensile strength polyester strength element and 19 AWG solid copper conductor, magnetically detectable. Provide water blocking connectors and tracing clips from tracer wire manufacturer.
   1. Color: Green.

C. Ball Markers: Round, high-density watertight polyethylene shell, impervious to minerals, chemicals, and temperature extremes normally found in the underground environment. RFID marker shall be encased within shell in a biodegradable mixture of propylene glycol and water.
   1. Color: Green.

2.6 CONCRETE ENCASEMENT AND CRADLES

A. Concrete: MDOT 2012 Standard Specifications for Construction, Section 701:
   1. Concrete Grade S3 per Tables 701-1A and 701-1B.

2.7 BEDDING AND COVER MATERIALS

A. Pipe Bedding and Cover: MDOT 2012 Standard Specifications for Construction, Section 902.07.
   1. Class III Granular Material per Table 902-3.
   2. Class II Granular Material per Table 902-3 may be substituted for Class III Granular Material with approval of Engineer

B. Suitable on site material may be utilized as pipe bedding and cover with approval of Engineer.

2.8 EQUIPMENT

A. Laser:
   1. Self-leveling with digital grade input.
   2. Accuracy: Plus or minus 1/16 inch over 100 feet
   3. Target: Manufactured for pipe installation, supplied with laser.

PART 3 EXECUTION

3.1 EXAMINATION

A. Section 01 30 00 - Administrative Requirements: Verification of existing conditions before starting work.

B. Verify trench bottom is ready to receive work and excavations, dimensions, and elevations are as indicated on Drawings. Notify Engineer of discrepancies.

C. Verify location of proposed manholes for proper sewer alignment.

D. Verify end location of proposed laterals to match existing sewer laterals or to provide alignment for future connections.

E. Verify location of proposed cleanouts. Whenever possible, cleanouts for new laterals on existing services shall be located directly in line with the existing lateral, without the use of bends upstream from the cleanout.

F. Verify alignment of lateral and location of proposed wye fitting.

G. Notify Engineer of conflicts with other utilities, surface improvements, and trees.

3.2 PREPARATION

A. Correct over excavation with bedding material.

B. Remove large stones or other hard matter capable of damaging pipe or impeding consistent backfilling or compaction.

C. Protect and support existing sewer lines, utilities and appurtenances.

D. Maintain profiles of utilities. Coordinate with other utilities to eliminate interference. Notify Engineer where crossing conflicts occur.

3.3 BYPASS PUMPING

A. Maintain service in existing sewers at all times.

B. Where the flow of existing sewers must be diverted to perform Work, perform bypass pumping.
   1. Design bypass pumping system to convey required flow rate.
   2. Verify receiving sewer has sufficient capacity to receive discharge from bypass pumping system; obtain Engineer's approval of proposed discharge location.
   3. Install, operate, maintain, and remove system.

3.4 BEDDING AND COVER

A. Excavate pipe trench in accordance with Section 31 23 33 - Trenching and Backfilling. Hand trim excavation for accurate placement of pipe to elevations indicated on Drawings.

B. Dewater excavations to maintain dry conditions and preserve final grades at bottom of excavation.

C. Provide sheeting and shoring in accordance with Section 31 23 33 - Trenching and Backfilling.

D. Place bedding material at trench bottom. Level material in one continuous layer not exceeding 6 inches compacted depth. Compact to 95 percent maximum density per ASTM D1557.

E. Backfill evenly around sides of pipe and to top of pipe with cover material. Place cover material to a minimum depth of one pipe diameter above utility but not less than 6 inches. Compact in maximum lifts of 12 inches to 95 percent maximum density per ASTM D1557. When placing cover around plastic pipe, limit maximum lift thickness of first lift to one half of pipe diameter.

F. Maintain optimum moisture content of bedding and cover materials to attain required compaction density.

3.5 INSTALLATION - PIPE

A. Install plastic pipe, fittings, and accessories in accordance with ASTM D2321. Seal joints watertight.

B. Lay pipe to slope noted on Drawings. Begin at downstream end and progress upstream. Utilize laser to maintain line and grade.
   1. Tolerance: Plus or minus 1/8 inch over 100 feet. Do not allow tolerances to accumulate.

C. Assemble and handle pipe and fittings in accordance with manufacturer's instructions.

D. Keep pipe and fittings clean until work is completed and accepted by Engineer. Cap open ends during periods of work stoppage.

E. Lay bell and spigot pipe with bells upstream.

F. Connect pipe to existing sewer system. Use only manufactured solid sleeve fittings. Do not use flexible couplings.

G. Encase pipe in concrete and construct concrete cradle to support crossing utilities where directed by Engineer.

H. Install tracer wire continuous above top of pipe, buried 24 inches below finished grade. Coordinate placement with backfilling operations. Continue tracer wire up sides of manholes and terminate with locating clip beneath manhole cover. Provide separate locating clip for each pipe entering manhole; position clip above pipe entry.

3.6 INSTALLATION - WYE BRANCHES

A. Install wye branches at locations indicated on Drawings concurrent with pipe laying operations. Use standard fittings of same material and joint type as sewer main.

B. Maintain minimum 5 feet separation distance between wye connection and manhole.

C. Adjust location of wye branches as necessary to match existing laterals. Do not install wye branch upstream of existing service pipe.

3.7 INSTALLATION - SANITARY LATERALS

A. Install plastic pipe, fittings, and accessories in accordance with ASTM D2321. Seal joints watertight.

B. Construct laterals from wye branch to cleanout.
   1. Use only manufactured fittings to adjust for alignment of existing service pipe.
   2. Do not use 90 degree bends.
   3. Maintain minimum 5 feet depth of cover over pipe.
   4. Maintain minimum 5 feet separation distance between adjacent laterals and other parallel service lines.
   5. Install laterals at a minimum slope of 1.0%.
   6. Where depth of main pipeline warrants, construct mainline riser.

C. Install tracer wire continuous above top of lateral, buried 24 inches below finished grade. Coordinate placement with backfilling operations. Connect lateral tracer wire to sewer main tracer wire with main to lateral connector. Continue tracer wire up side of cleanout and terminate with locating clip attached to cleanout cap adapter.

D. Construct cleanout as close to right of way as feasible without excavating on private property. Install cleanout cap 4 inches below finished grade in lawn areas. Install cleanout riser cover over cleanout cap for cleanouts located in driveways. Attach cleanout adapter to riser pipe using primer and solvent cement in accordance with ASTM D2855.

E. Install ball marker at cleanout. Attach to cleanout riser immediately below cleanout cap with plastic cable tie. Remove identification tag and attach to as-built drawings noting service address. Provide ball markers to Owner for programming two weeks prior to installation. Owner will program ball marker with size and type of service.

F. Construct laterals from cleanout to terminal point:
   1. Do not install bends upstream from the cleanout without approval of Engineer.
   2. Use only manufactured fittings to adjust for alignment of existing service.
   3. Do not adjust for alignment at connection to existing service.
   4. Connect new lateral pipe to existing service pipe with flexible coupling matching diameter of both pipe sizes.

G. At termination of laterals to empty lots, install watertight plug, braced to withstand pipeline test pressure thrust.

3.8 BACKFILLING

A. Measure and record the distance between all manholes, wyes, fittings, and cleanouts prior to backfilling.

B. Backfill excavation in accordance with Section 31 23 33 - Trenching and Backfilling.

3.9 FIELD QUALITY CONTROL

A. Section 01 40 00 - Quality Requirements: Testing and Inspections by Contractor and Testing and Inspections by Owner.

B. Visually inspect pipe, fittings, and connections for leakage or infiltration prior to backfilling.

C. Low Pressure Air Test: Test in accordance with Section 33 01 30.13 - Sewer and Manhole Testing.

D. Deflection Test: Test in accordance with Section 33 01 30.13 - Sewer and Manhole Testing.

E. Geotechnical Tests:
   1. Provide Owner's representative with samples or access to stockpiles upon request.
   2. Owner's representative will perform laboratory testing of bedding and cover materials to determine gradation in accordance with ASTM C117 and ASTM C136.
   3. Owner's representative will perform testing of bedding and cover materials to determine maximum density in accordance with ASTM D1557 or Michigan Cone Test.
   4. Owner's representative will perform in place compaction tests of bedding and cover materials in accordance with the following:
      a. Density Tests: ASTM D2922.
      b. Moisture Tests: ASTM D3017.
   5. Frequency of Tests: At each compacted bedding and cover layer, one test for each 150 feet or less of trench length. Additional testing may be required at the discretion of the Engineer.

F. When tests indicate Work does not meet specified requirements, remove Work, replace and retest.

3.10 PROTECTION OF FINISHED WORK

A. Section 01 70 00 - Execution and Closeout Requirements: Protecting Installed Construction.

B. Protect pipe and cover from damage or displacement until backfilling operation is complete.
   1. Take care not to damage or displace installed pipe and joints during construction of pipe supports, backfilling, testing, and other operations.

2. Repair or replace pipe that is damaged or displaced from construction operations.

3.11 STANDARD DRAWINGS

A. Sanitary Lateral

SANITARY LATERAL

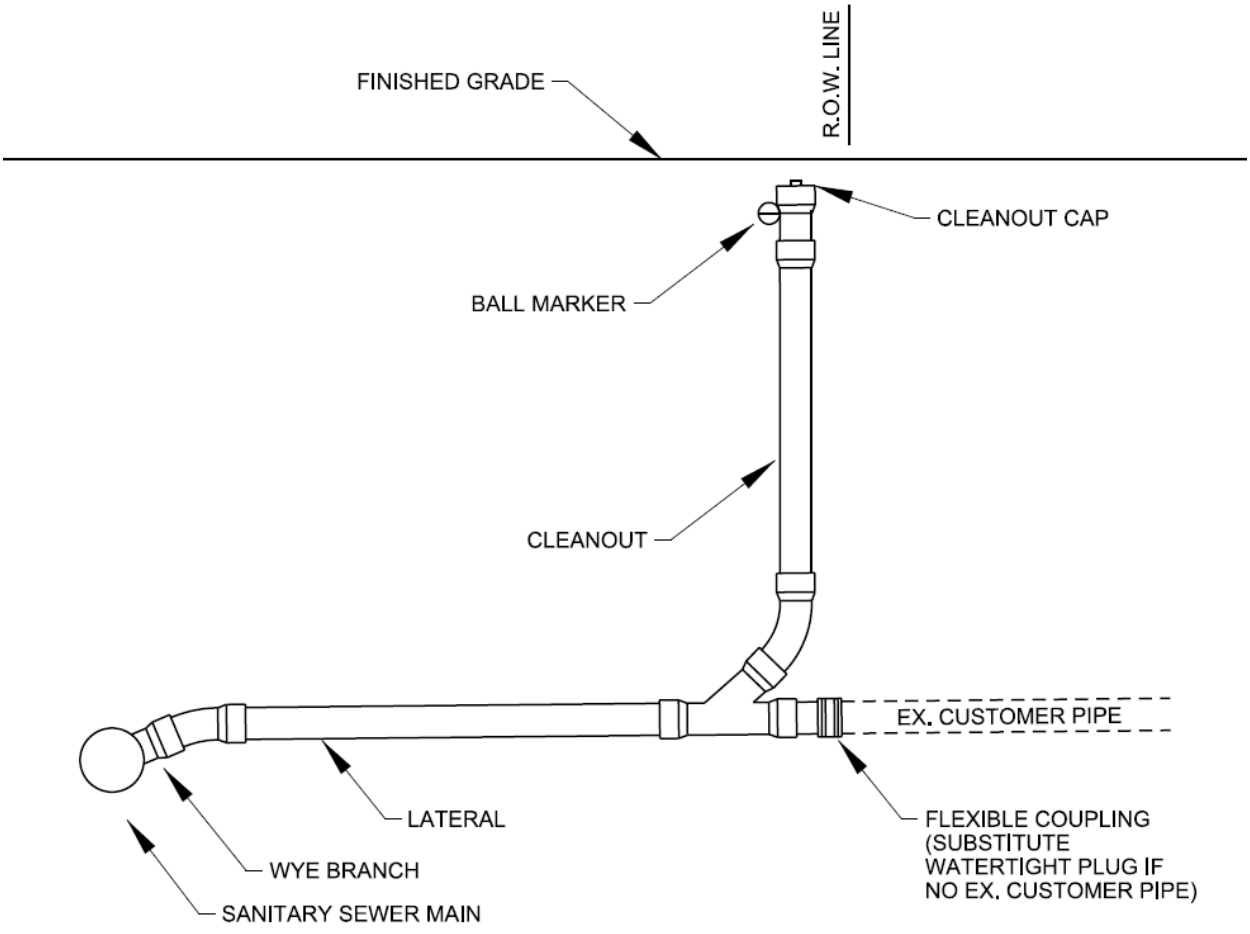

END OF SECTION

SECTION 33 32 19

PUBLIC UTILITY WASTEWATER PUMPING STATIONS

PART 1 GENERAL

1.1 SUMMARY

A. Section Includes:
1. Design Conditions
2. Valve Chambers and Wet Wells
3. Access Doors
4. Packaged Pump Stations
5. Station Piping
6. Site Piping
7. Valves
8. Valve Boxes
9. Electrical and Instrumentation
10. Pressure Gauges
11. Miscellaneous Metals and Coatings
12. Sump Pumps
13. Spare Parts

B. Related Sections:
1. Section 03 30 00 – Cast-in-Place Concrete
2. Section 03 41 13 – Precast concrete Hollow Core Planks
3. Section 03 45 00 – Precast Architectural Concrete
4. Section 07 54 00 – Thermoplastic Membrane Roofing
5. Section 08 11 16 – Aluminum Doors and Frames
6. Section 08 31 00 – Access Doors and Panels
7. Section 08 Section 26 32 16 – Engine Generator
8. Section 26 36 23 – Automatic Transfer Switches
9. Section 31 10 01 - Pavement and Utilities Removal.
10. Section 31 23 17 - Trenching.
11. Section 32 13 13 - Concrete Paving.
12. Section 33 01 32 - Sewer and Manhole Testing.
13. Section 33 05 14 – Public Manholes and Structures.
14. Section 33 32 19.01 – Public Utility Wastewater Pumps
15. Section 33 32 19.02 –Public Utility Wastewater Pumping Stations – Electrical Work
16. Section 33 32 19.03 –Public Utility Wastewater Pumping Stations – Controls
17. Section 33 34 00 - Sanitary Sewerage Force Mains

1.2 UNIT PRICE - MEASUREMENT AND PAYMENT

A. Structure, San. Bypass Chamber, __ inch Dia
1. Basis of Measurement: By each structure

2. Basis of Payment: Includes excavation, all required components and accessories, connecting and sealing all pipe entries, fillet, bedding and backfill, compaction and testing.
3. Basis of Application: This pay item shall apply to all wastewater pumping station Valve Chambers constructed as part of this project.

B. Structure, San. Wet Well, __ inch Dia
1. Basis of Measurement: By each structure
2. Basis of Payment: Includes excavation, all required components and accessories, connecting and sealing all pipe entries, fillet, bedding and backfill, compaction and testing.
3. Basis of Application: This pay item shall apply to all wastewater pumping station Wet Wells constructed as part of this project.

C. San. Lift Station, (station name)
1. Basis of Measurement: By each Wastewater Pumping Station Installation
2. Basis of Payment: Includes furnishing and installing all required equipment and accessories for proper operation of the pumping station, conducting all startup and initialization procedures, and commissioning of facility into services.
3. Basis of Application: This pay item shall apply to all Wastewater Pumping Stations constructed new as part of this project.

D. San. Lift Station, (station name), Rehabilitation
1. Basis of Measurement: By each Wastewater Pumping Station Installation
2. Basis of Payment: Includes removing and replacing existing pumps, piping and other mechanical and pumping equipment and accessories and modifications to the floors, walls, and other portions of the substructure for proper operation of the pumping station, conducting all startup and initialization procedures, and commissioning of facility into services.
3. Basis of Application: This pay item shall apply to all Wastewater Pumping Stations constructed new as part of this project.

E. San. Lift Station, (station name), Superstructure Replacement
1. Basis of Measurement: By each Wastewater Pumping Station Installation
2. Basis of Payment: Includes conducting modifications to the top of the existing foundation and upper floor slabs, and installation of the new superstructure, including windows, doors, hardware, etc as shown on the plans.
3. Basis of Application: This pay item shall apply to all Wastewater Pumping Stations constructed new as part of this project.

1.3 REFERENCES

A. ASTM International:
1. ASTM A48/A48M - Standard Specification for Gray Iron Castings.
2. ASTM C55 - Standard Specification for Concrete Brick.
3. ASTM C443 – Standard Specification for Joints for Concrete Pipe and Manholes, Using Rubber Gaskets.
4. ASTM C478 - Standard Specification for Precast Reinforced Concrete Manhole Sections.

5. ASTM C497 - Standard Test Methods for Concrete Pipe, Manhole Sections, or Tile.
6. ASTM C891 - Standard Practice for Installation of Underground Precast Concrete Utility Structures.
7. ASTM C913 - Standard Specification for Precast Concrete Water and Wastewater Structures.
8. ASTM C923 - Standard Specification for Resilient Connectors Between Reinforced Concrete Manhole Structures, Pipes and Laterals.

B. Society for Protective Coatings:
1. SSPC-Paint 16 - Coal Tar Epoxy-Polyamide Black (or Dark Red) Paint.

1.4 SUBMITTALS

A. Section 01 33 00 - Submittal Procedures.

B. Submit shop drawings and manufacturer's data including pump, motor, seals, guide rails, discharge connection, valves, and access doors including dimensions and locations.

C. Include five (5) copies of the installation instructions with the delivery of the equipment.

D. Provide five (5) copies of the operation and maintenance manuals, each containing "as-built" data on pump station equipment, instructions on operation and maintenance, list of parts and sources from which they may be obtained, and a list of recommended spare parts maintained on site.

E. Pump Curves:
1. Furnish performance curves and tables showing flow in gallons per minute, total dynamic head in feet, efficiency in percent and brake horsepower with shop drawings.
2. Furnish factory test data for each pump showing flow in gallons per minute, total dynamic head in feet, efficiency in percent and brake horsepower at design operating points before pump shipment.

1.5 QUALITY ASSURANCE

A. Obtain precast concrete utility structures from a single source.

B. Perform work in accordance with National Precast Concrete Association Quality Control Manual for Precast and Prestressed Concrete Plants.

C. Manufacturer Qualifications:
1. Company specializing in manufacturing products specified in this Section with minimum twenty years documented experience.
2. All equipment and materials shall be new and shall bear the manufacturers name and trade name. In cases where the standard has been established for the particular material, the material shall be so labeled.
3. The equipment to be furnished shall essentially be the standard product of a manufacturer regularly engaged in the production of the required type of

equipment for this type of work and shall be the manufacturers latest approved design.

D. Installer: Company having experience in the installation, repair, and rehabilitation of municipal wastewater pumping stations with a minimum of ten (10) years documented experience. The Installer shall furnish a foreman with experience in the installation of wastewater pumping stations with a minimum of five (5) years documented experience on no fewer than five (5) pumping stations.

1.6 DELIVERY, STORAGE AND HANDLING

A. Section 01 60 00 - Product Requirements.

B. Equipment and material shall be suitably delivered and stored and shall be readily accessible for inspection. All items subject to moisture damage shall be stored in dry spaces. All material and equipment shall be protected against dirt, dust, water and chemical or mechanical injury, vandalism and theft.

1.7 DESIGN CONDITIONS

A. Number of Pumps: Two pumps required (one backup).

B. Operating conditions:
1. Based on design flows and total head conditions with one pump operating.
2. Black River Street Lift Station
   a. Minimum design flow rate for each pump is 680 gpm at 39’ total dynamic head
      1) Minimum velocity in discharge piping is 2 fps.
      2) Maximum velocity in discharge piping is 6 fps.
   b. Pump Speed: Variable 650 – 1550 rpm
   c. Horsepower: 20hp
   d. Total Efficiency: 55 % minimum.
3. Indian Grove Lift Station
   a. Minimum design flow rate for each pump is 600 gpm at 61’ total dynamic head
   b. Pump Speed: 1760rpm
   c. Horsepower: 15hp
   d. Total Efficiency: 64 % minimum.

1.8 Utility Coordination

A. Contractor to arrange for new electrical and/or natural gas service or alterations to existing services and pay all associated fees.

PART 2 PRODUCTS

2.1 WET WELLS, PUMPING AND VALVE CHAMBERS

A. General
1. Precast Concrete Structures (Default) - Structures shall be precast concrete manhole structures in accordance with ASTM C478 and Section Section 33 05 13 – Public Manholes and Structures
2. Cast-in-Place Concrete Structures (Where specified) - Cast-in-place structures shall be in accordance with Section 03 30 00 – Cast-in-Place Concrete

B. The base section of each structure shall include an integral concrete footing to provide a bearing surface for ballast concrete. Ballast concrete shall be placed in sufficient quantity to withstand buoyant forces resulting from a submerged groundwater condition.

C. A poured concrete fillet shall be integrally cast with the wet well base or installed on site conforming with the detail drawings. The fillet shall function to direct solids toward the pump impellers, thereby preventing accumulation of settlable solids in the wet well. The fillet shall be constructed at a 1H:2V slope encompassing a minimum of 75 percent of the wet well footprint to ensure settlable solids are directed toward the pump intakes.

D. Exterior Manhole Coating:
1. ASTM D 1227, Type III, Class 1, cold-applied, emulsified-asphalt dampproofing applied at a rate of 3 gallons per 100 square feet. Applied to all exterior surfaces of manhole. Required on all manholes used for sanitary sewer service.

E. Interior Wet Well Coatings:
1. General
   a. Chemical Resistance (ASTM D543/G20) all types of service for:
      1) Municipal sanitary sewer environment
      2) Sulfuric acid
      3) Sodium hydroxide
2. Coal Tar Epoxy:
   a. High-build coal-tar epoxy
   b. Products:
      1) Sherwin Williams Tar-Guard
      2) Tenemec Series 46H-413 Hi-Build Tneme-Tar
      3) Substitutions: Section 01 60 00 – Submittal Procedures
3. 100% Solids High-Build Epoxy
   a. VOC Content (ASTM D2584): 0%
   b. Products:
      1) Raven 405 – 100% Solids, solvent-free ultra-high-build epoxy system, by Raven Lining Systems with a minimum wet film thickness of 125 mils.
      2) CoroBond 100 Epoxy Primer/Sealer and Sewer Cor-Cote SC Plus, by Sherwin Williams Company. The minimum dry film thickness shall be 4.0-6.0 mils for the CoroBond 100 Epoxy Primer/Sealer and 125 mils for Sewer Cor-Cote SC.
      3) Substitutions: Section 01 60 00 – Subtitution Requirements.

2.2 ACCESS DOORS

A. General:
1. Provide aluminum access doors with drainage frame, fall prevention device and designed for pedestrian traffic.
2. Design loading: H-20 vehicular live load with a maximum deflection of 1/150th of the span.

B. Doors:
1. Single or double leaf.
2. 1/4-inch thick aluminum diamond plate cover.
3. Hardware: Corrosion resistant materials.
4. Frame: Extruded aluminum channel frame with 1-1/2 inch NPT drain coupling in frame.
5. Gasket: A continuous EPDM gasket shall be mechanically attached to the channel frame to create a barrier around perimeter of the cover to reduce amount of debris that can enter the channel.
6. Hinges: Forged brass with stainless steel pins, or all stainless steel.

C. Fall prevention: Hinged fiberglass or aluminum grating that covers hatch opening. Design live load shall be 300 psf minimum.

D. Door and grating: Holding arm shall engage and automatically lock the door or grating when it is open 90 degrees. Provide a grip handle to release for closing.

E. Locking device: Flush, spring loaded slamlock capable of unlocking from interior.

F. Coat frame with bituminous coating where it will come in contact with concrete.

G. Manufacturers and models:
1. Bilco Company, Series J-AL & JD-AL.
2. Flygt, Series FTP.
3. Halliday Products, W Series
4. Substitutions: Section 01 60 00 – Submittal Procedures

2.3 PACKAGED PUMPING STATION

A. General:
1. Furnish above-ground packaged pump station housing 2 self-priming suction lift pumps capable of operating at the design conditions described in this specifications and as shown on the plans.

B. Products:
1. ReliaSource 6x6T Above-Ground Lift Station
2. Substitutions: Not Permitted

2.4 STATION PIPING AND SUPPORTS

A. Ductile Iron Pipe: AWWA C151.

1. Outside Coating:
   a. Station Piping
      1) Submerged:
         a) Epoxy Primer: 1 coat, 1.5 mil
         b) Polyamide Cured Epoxy Enamel: 2 Coat, 2 mil per coat
      2) Unsubmerged and Wet Well: Coal Tar Epoxy, 2 coats, 8 mil per coat.
      3) Surface preparation: Wire brush: Remove all rust and loose scale.
2. Interior Lining: Amine Cured Novolac Epoxy for wastewater, 40 mils
   a. Products:
      1) Protecto 401 Ceramic Epoxy, thickness per manufacturer
      2) Tnemec Series 431 Perma-Shield PL
      3) Substitutions: Section 01 600 00 – Product Requirements
3. Pipe Thickness Class: AWWA C150, thickness class 53.
4. Joints:
   a. Flanged Joints: AWWA C115.
   b. Gaskets: AWWA C115, Neoprene rated for 200°F liquid
   c. Hardware: Stainless Steel
5. Fittings: AWWA C110, ductile-iron fittings or AWWA C153, ductile-iron compact fittings.
   a. Coating and Lining:
      1) Exterior Coating: Bituminous Coating, AWWA C110.
      2) Interior Lining: Fusion-bonded epoxy coating, 40 mils

2.5 SITE PIPING

A. Products:
   1. Restraining Glands:
      a. Ebaa Iron Sales, Inc.: Series 1100.
      b. Ford Meter Box Company, Inc.: Uni-Flange Series 1400.
      c. Romac Industries, Inc.: GripRing.
      d. Substitutions: Not Permitted.
   2. Restraining Harnesses:
      a. Ebaa Iron Sales, Inc.: Series 1700.
      b. Ford Meter Box Company, Inc.: Uni-Flange Series 1450.
      c. Substitutions: Not Permitted.

B. Ductile Iron Pipe: AWWA C151.
   1. Bituminous outside coating: AWWA C151.
   2. Interior Lining: Amine Cured Novolac Epoxy for wastewater, 40 mils
      a. Products:
         1) Protecto 401 Ceramic Epoxy, thickness per manufacturer
         2) Tnemec Series 431 Perma-Shield PL
         3) Substitutions: Section 01 600 00 – Product Requirements
   3. Pipe Thickness Class: AWWA C150, thickness class 52.
   4. Joints:
      a. Mechanical and Push-On Joints: AWWA C111.

b. Flanged Joints: AWWA C115.
c. Rubber Gaskets: AWWA C111. Locking gaskets not permitted.

5. Fittings: AWWA C110, ductile-iron fittings or AWWA C153, ductile-iron compact fittings.
   a. Outside Coating: Exterior Coating: Bituminous Coating, AWWA C110.
   b. Interior Lining: Amine Cured Novolac Epoxy for wastewater, 40 mils
   c. Joints: AWWA C111, mechanical joints.
6. Polyethylene Encasement: AWWA C105 polyethylene jacket.
7. Restraints:
   a. Restraining Glands: Ductile iron glands with continuous or individual gripping wedges.
   b. Restraining Harnesses: Ductile iron restraining rings with individual gripping wedges, ductile iron follower rings, and low alloy steel tie bolts or rods.
8. Electrical Conductivity: Provide copper conductivity straps, factory welded to pipe ends with field installed jumper strap and silicon-bronze bolts.

2.6 VALVES

A. General: Valves with non stainless steel metal body or internals shall be lined with a fusion bonded epoxy lining material suitable for exposure to wastewater.

B. Check Valves: AWWA C508 Swing Check Valve
1. Ductile Iron Body, ANSI Class 125/150 Flanged End
2. Pressure Rating: 250 psi
3. Fully Opening
4. Closure: Lever and Weight or Lever and Spring
5. Disc Material: Ductile Iron with BUNA-N Rubber Disc Seat
6. Shaft Material: 300 Series Stainless Steel
7. Body Seat: 300 Series Stainless Steel
8. Ball-type check valves, inline or “sinking ball” type, will not be permitted.
9. Products
   a. APCO CVS 250/250A
   b. Val-Matic 7800 Series
   c. Substitutions: Not Permitted.

C. Plug Valves: AWWA C517 Resilient Seated Cast Iron Eccentric Plug Valve
1. Ductile Iron Body, ANSI Class 125/150 Flanged End
2. Pressure Rating: 250 psi (min)
3. Full Port Type (100% Opening)
4. Operation: Direct Nut w/ Lever and adjustable memory stop (default)
   a. Manual geared w/ handwheel or valve box operation where specified.
5. Bearing Material: 300 Series Stainless Steel
6. Plug Material: Ductile Iron with BUNA-N Rubber Lining
7. Products:
   a. DeZurik PEC
   b. Val-Matic Cam-Centric
   c. Substitutions: Not Permitted

2.7 VALVE BOXES

A. Products:
1. East Jordan Iron Works: 8560 Series.
2. Tyler Union: 6960 Series.
3. Substitutions: Section 01 60 00 - Product Requirements.

B. Domestic cast iron, three-piece, screw type.

C. Base Section:
1. Valves 8 inch and smaller: No. 4 round base.
2. 10 inch and 12 inch valves: No. 6 round base.
3. Valves 16 inch and larger: No. 160 base.

D. Lid: Cast iron, non-locking, marked "Sewer" or “S.”

E. Protective Coating: Coal tar or bituminous coating.

2.8 Miscellaneous Fittings

A. Pipe Seals: “Link-seal” type modular, mechanical, interlocking, synthetic rubber links shaped to continuously fill the annular space between the discharge pipe and wall sleeve shall be used to provide a hydrostatic seal.

B. Flexible Couplings: Sleeve type couplings designed to connect and restrain plain end pipe shall be installed between the wet well and valve vault to provide strain relief and prevent pipe rupture in the event of differential settlement between the wet well and valve vault.
1. Ensure compatibility with specified pipe materials and pressure classes.
2. Products
a. EBAA 3800 MEGA-coupling
b. JCM Industries Model 219 Restrained Coupling
c. Romac Industries, Inc. 400 RG Restraint Coupling
d. Smith-Blair, Inc Pipe-Lock

C. Quick Disconnect: Fit suction and discharge pipes with male cam and groove couplings. Couplings shall be located within 6 inches of the hatch to facilitate connection of bypass pumping equipment without the need to enter the wet well or valve chamber. Size as shown on Plans.

2.9 ELECTRICAL AND INSTRUMENTATION

A. See Section 33 32 19.01 – Wastewater Utility Pumping Station Electrical Work

B. See Section 33 32 19.02 – Controls and Instrumentation

2.10 PRESSURE GAUGES

A. Location on pump discharge pipes: In valve chamber upstream from check valve.

B. 4-1/2-inch, black phenolic pressure gauge case, silicon filled, bottom connection, 0-60 psi calibrated range.

C. Manufacturer:
1. Ashcroft Model No. 1279.
2. Substitutions: Section 01 60 00 – Submittal Procedures

D. Isolation Diaphragms
1. General: Provide isolation diaphragms for each gauge mounted on tanks or pipes carrying waste water, solvents, acids, or caustics.
2. Design: Clean-out type without disturbing diaphragm. Complete with filling and flushing connections.
3. Process Connections: 1/2-inch NPT or 150# flanged connection.
4. Flushing Connection: 1/4-inch NPT.
5. Pressure Device Connection: 1/2-inch NPT.
6. Material: Stainless steel body and diaphragm or other material which is compatible with fluid to be handled.
7. Isolation diaphragm and pressure gauges shall be supplied as a single unit filled and tested as per design requirement.

2.11 MISCELLANEOUS METALS AND COATINGS

A. Construction: All hangers, supports, brackets, anchors, bolts, etc. in wet well shall be Series 300 Stainless Steel.

B. Surface preparation: Wire brush: Remove all rust and loose scale.

C. Painting:
1. Ferrous metal (ungalvanized) exterior:
a. 1 coat rust inhibitive primer, 1.5 mils.
1) Durako No. 692.
2) Tnemec No. 99.
3) Substitutions: See Section 01 60 00 – Submittal Procedures.
b. 2 coats exterior alkyd glass enamel, 2 mils per coat.
2. Ferrous metal interior:
a. 2 coat epoxy primer, 2 mils.
b. Durako “Durepon.”
c. Tnemec “Tneme-Tufcoat.”
d. Substitutions: See Section 01 60 00 – Submittal Procedures.

2.12 SUMP PUMP

A. General:
1. Furnish and install Sump Pump(s) at locations specified on the Drawings
2. Capacity: Minimum 50 gpm at 15 feet TDH.
3. Quantity: One unit.
4. Power: Thermally protected 120 volt, single phase, 60 Hertz with minimum 18-foot power cord.
5. Dimensions: Allow for placement into 18-inch diameter sumps.

6. Miscellaneous: Allow for submersed operation.

B. Manufacturer:
1. Little Giant Pump Company.
2. Substitutions: See Section 01 60 00 – Submittal Procedures.

2.13 Accessories

A. Sealant: Industrial silicon sealant for pipe penetrations in basin.

B. Anchor Bolts, Nuts, and Washers: ASTM A709/A709M, Grade 36, bent anchor bolts; ASTM A307, Grade A, nuts; ASTM A126, gray iron washers. Galvanize bolts, nuts and washers in accordance with ASTM A153/A153M.

C. Modular Seals: Link-Seal Type Modular Seals with Stainless Steel Hardware

2.14 SPARE PARTS

A. Furnish the following spare parts for each pump station:
1. One (1) impeller
2. Three (3) sets of station keys
3. One (1) set of mechanical seals for each pump
4. One (1) set of pump discharge seal gaskets
5. One (1) pump impeller wrench

B. Package each spare part and clearly label.

PART 3 EXECUTION

3.1 INSTALLATION

A. Install in accordance with manufacturer's recommendations, shop drawings, and contact drawings.

B. Replacement pump station: Maintain operation of existing station or provide bypass pumping.

C. Access doors: Connect drainage coupling to Schedule 80 PVC pipe and route pipe outlet to a location 12-inches away from chamber and 5-feet below grade.

3.2 EXAMINATION

A. Section 01 30 00 - Administrative Requirements: Verification of existing conditions before starting work.

B. Verify inlet and discharge piping connection are size, location, and elevation on Drawings.

3.3 PREPARATION

A. Establish elevations of pumping station.

B. Establish minimum separation of 10 feet horizontally and 18 inches vertically from water mains and services in accordance with 10 State Standards code.

3.4 EXCAVATION

A. Excavate direct burial cable trench in accordance with Section 31 23 33 – Trenching and Backfilling

B. Excavate to required elevation to install basin on undisturbed subgrade in accordance with Section 31 23 33 – Trenching and Backfilling with minimum clearance of 4 inches (100 mm) between basin and surrounding earth.

3.5 BASIN INSTALLATION

A. Install basin in accordance with Section 33 05 14 – Public Manholes and Structures

B. Set cover frames and covers level without tipping, to correct elevations.

C. Assemble basin components including inlet hub/fitting, discharge hub, cover, pump support rail system, level controls, and junction box.

D. Connect to inlet and piping with flexible connectors and discharge pipes with modular link-seal connectors.

E. Seal joints water tight between inlet and discharge pipes and sump wall.

3.6 PUMP INSTALLATION

A. Install pump including fittings, brackets, discharge piping, check valve to basin rail assembly, lifting device, and discharge. Wire pump to junction box.

3.7 CONTROL PANEL INSTALLATION

A. Mount and wire control panel for pumping station operation including motor controls to each pump, circuit breaker, starter, control transformer, fuse box, terminal block, alternator, alarm and running lights.

B. Wire in accordance with requirements of National Electrical Code.

C. Use 16 AWG control wiring for control circuits and white for neutral grounded conductors.

D. Use minimum 14 AWG black power wiring.

E. Number each conductor.

F. Tin ends of wires with 60/40 lead tin alloy solder.

G. Locate and connect direct burial cable from control panel to basin junction box.

3.8 BACKFILL

A. Backfill basin and direct burial cable in accordance with Section 31 23 23 – Trenching and Backfilling.

B. Maintain optimum moisture content of fill material to attain required compaction density.

C. Do not use wheeled or tracked vehicles for tamping.

3.9 FACTORY TESTING

A. Test each pump before shipment. Furnish performance data for each pump based on test results at design operating conditions.

3.10 FIELD QUALITY CONTROL

A. Testing and Inspection:
1. Supervision by OWNER
2. Complete before connecting to active system.
3. After cleaning notify and arrange with OWNER for inspection and test.
4. Provide equipment and assistance.

B. Station performance test:
1. Notification 48 hours prior to conducting.
2. Supervision by factory trained representative for instrumentation and controls.
3. Attendance by CITY, OWNER, ENGINEER and CONTRACTOR.
4. Measure flow, wet well level, discharge pressure and electric power draw during test.
5. Inspect components operating satisfactorily.
6. Correct and repair all faulty operating components and repeat test until acceptable.

C. Pressure:
1. Air or air-water methods of applying pressure prohibited.
2. Range: 100 to 110 psi at lowest elevation.
3. Duration: 1 hour and until completion of inspection.
4. Procedure: Fill system slowly, expel air through air release valve connection at high points and apply pressure. Install air release valve after test.
5. Examine line and appurtenances for leaks and movement.
6. Repair defects, visible leaks and repeat test until acceptable.

D. Before making tests, the CONTRACTOR shall check for proper thrust blocking and restraint at all turns, intersections, ends and reduction. All new pipe, including mains and laterals shall be tested. All air shall be expelled from the mains and they shall be filled with water.

3.11 START-UP

A. Arrange and pay for the service of the manufacturer's representative to be on site for checking the installation, start-up and training for a minimum of two (2) days, and shall include all expenses.

3.12 OPERATOR TRAINING

A. Schedule 1/2 day of training after station performance test. Notification shall be at least 72 hours prior to conducting. Supervision shall be by factory trained representative.

3.13 SCHEDULES

A. Submersible Pump Station Details:

B. Lift Station Plan.

C. Lift Station Cross Section

3.14 MANUFACTURER’S WARRANTY

A. Turn over complete and functional wastewater pumping station with all Manufacturer’s Warranties intact.

B. The pump manufacturer shall warrant the pump equipment to be of quality construction, free of defects in material and workmanship. A written warranty shall include specific details described below.

C. All equipment, apparatus, and parts furnished shall be warranted for five (5) years, excepting only those items that are normally consumed in service, such as oils, grease, packing, gaskets, O rings, etc. The pump manufacturer shall be solely responsible for warranty of the pump equipment and all components.

D. Components failing to perform as specified by the engineer, or as represented by the manufacturer, or as proven defective in service during the warranty period, shall be replaced, repaired, or satisfactorily modified by the manufacturer without cost of parts or labor to the owner.

E. It is not intended that the pump manufacturer assume liability for consequential damages or contingent liabilities arising from failure of any vendor supplied product or part which fails to properly operate, however caused. Consequential damages resulting from defects in design, or delays in delivery are also beyond the manufacturer's scope of liability.

F. The warranty shall become effective upon the acceptance by the purchaser or the purchaser's authorized agent, or sixty (60) days after installation, or ninety (90) days after shipment, whichever occurs first.

END OF SECTION

SECTION 33 32 19.01

PUBLIC UTILITY WASTEWATER PUMPS – SUBMERSIBLE TYPE

PART 1 GENERAL

1.1 SUMMARY

A. Section Includes:
1. Design Conditions
2. Mounting Equipment
3. Submersible Wastewater Pumps
4. Power and Monitoring Cables
5. Guide Rails and Brackets
6. Lift Out Equipment

B. Related Sections:
1. Section 26 32 16 – Engine Generator
2. Section 26 36 23 – Automatic Transfer Switches
3. Section 31 10 01 - Pavement and Utilities Removal.
4. Section 31 23 17 - Trenching.
5. Section 32 13 13 - Concrete Paving.
6. Section 33 01 32 - Sewer and Manhole Testing.
7. Section 33 05 14 – Public Manholes and Structures.
8. Section 33 32 19 – Public Utility Wastewater Pumping Stations
9. Section 33 32 19.02 –Public Utility Wastewater Pumping Stations – Electrical Work
10. Section 33 32 19.03 –Public Utility Wastewater Pumping Stations – Controls and Instrumentation
11. Section 33 34 00 - Sanitary Sewerage Force Mains

1.2 BASIS OF PAYMENT

A. Payment for Submersible Sewage Pumps shall be included with the associated lift station.
1. Cost shall include furnishing, installing, and testing two (2) submersible pumps as required by the Drawings and Specifications.

1.3 REFERENCES

A. Each pump shall be tested and approved in accordance with national and international standards (IEC34-1, HI, CSA) and ISO 9906.

1.4 SUBMITTALS

A. Section 01 33 00 - Submittal Procedures.

B. Submit shop drawings and manufacturer’s data including pump, motor, seals, guide rails, discharge connection, valves, and access doors including dimensions and locations.

C. Include five (5) copies of the installation instructions with the delivery of the equipment.

D. Provide five (5) copies of the operation and maintenance manuals, each containing "as-built" data on pump station equipment, instructions on operation and maintenance, list of parts and sources from which they may be obtained, and a list of recommended spare parts maintained on site.

E. Pump Curves:
   1. Furnish performance curves and tables showing flow in gallons per minute, total dynamic head in feet, efficiency in percent and brake horsepower with shop drawings.
   2. Furnish factory test data for each pump showing flow in gallons per minute, total dynamic head in feet, efficiency in percent and brake horsepower at design operating points before pump shipment.

1.5 QUALITY ASSURANCE

A. Obtain precast concrete utility structures from a single source.

B. Perform work in accordance with National Precast Concrete Association Quality Control Manual for Precast and Prestressed Concrete Plants.

C. Manufacturer Qualifications:
   1. Company specializing in manufacturing products specified in this Section with minimum twenty years documented experience.
   2. All equipment and materials shall be new and shall bear the manufacturers name and trade name. In cases where the standard has been established for the particular material, the material shall be so labeled.
   3. The equipment to be furnished shall essentially be the standard product of a manufacturer regularly engaged in the production of the required type of equipment for this type of work and shall be the manufacturers latest approved design.

D. Installer: Company having experience in the installation, repair, and rehabilitation of municipal wastewater pumping stations with a minimum of ten (10) years documented experience. The Installer shall furnish a foreman with experience in the installation of wastewater pumping stations with a minimum of five (5) years documented experience on no fewer than five (5) pumping stations.

1.6 DELIVERY, STORAGE AND HANDLING

A. Section 01 60 00 - Product Requirements.

B. Equipment and material shall be suitably delivered and stored and shall be readily accessible for inspection. All items subject to moisture damage shall be stored in dry spaces. All material and equipment shall be protected against dirt, dust, water and chemical or mechanical injury, vandalism and theft.

1.7 DESIGN CONDITIONS

A. Number of Pumps: Two pumps required (one backup).

B. General: The pump shall be capable of handling a 3" spherical solid. The pump shall be non-overloading throughout the entire range of operation without employing service factor. The performance curve submitted for approval shall state in addition to head and capacity performance, the pump efficiency, solid handling capacity, and motor service factor.

C. Electrical and Motor Rating: Motor voltage, phase, and power rating shall be as specified in the plans.

D. Duty Point: The pumps shall be capable of supplying the indicated flow rate, given in gallons per minute, against the combination of static head and frictional losses in the force main, referred to as Total Dynamic Head (TDH). This combination of flow rate and TDH (as designed) will be referred to as the duty point of the pump.

E. The pumps shall be approved for operation in hazardous environments meeting NEC Class 1, Division I, Group D.

PART 2 PRODUCTS

2.1 PUMPS

A. MANUFACTURERS
1. ABS Pumps XFP Non-Clog Wastewater Pump
2. Xylem Flygt Non-Clog Wastewater Pump
3. Substitutions – Not Permitted

2.2 CONSTRUCTION

A. General
1. Major pump components shall be of cast iron EN GJL-250 or ASTM-No35B with smooth surfaces devoid of blow holes or other casting irregularities. EN GJS-500-7 or ASTM- No 80-55-06 is also allowed. All exposed nuts or bolts shall be made of stainless steel A2 acc. to ISO 3506-1 or ASTM 304 or better.
2. Sealing design shall incorporate metal-to-metal contact between machined surfaces. Pump/Motor unit mating surfaces where watertight sealing is required shall be machined and fitted with Nitrile or Viton rubber O-rings.
3. Rectangular cross section rubber, paper or synthetic gaskets that require specific torque limits to achieve compression shall not be considered as adequate or equal. No secondary sealing compounds, elliptical O-rings, grease or other devices shall be used.

B. Painting
1. The outer surfaces of the pump shall be protected by suitable painting system including a two-component high-solid top coating.

2.3 IMPELLER

A. The impeller(s) shall be of semi open multi vane, back-swept, non-clog design and dynamically balanced. The leading edges shall be horizontal and due to the backswept form, transport any debris to the perimeter of the inlet. The impeller vanes shall be self-cleaned upon each rotation as they pass across a sharp relief groove and shall keep the vane clear of debris, maintaining an unobstructed pumping. The impeller shall have heavily back swept leading edges with a specific angle distribution enabling the capability of handling solids, fibrous materials, heavy sludge and other matter found in waste water. The clearance between the insert ring and the impeller shall be adjustable.

B. The leading edges and tip of the vanes (facing the insert ring) shall be hardened to minimum 55 HRC to a depth of 4 mm. The impeller shall be of hard iron EN GJN-HB555 (5.5610) or ASTM-A 532-Alloy III A.

C. Pump volute shall be single-piece non-concentric design with smooth passages large enough to pass any solids that may enter the impeller. Pump volute shall be of cast iron EN GJL-250 or ASTM-No35B. EN GJS-500-7 or ASTM- No 80-55-06 is also allowed.

2.4 COOLING SYSTEM

A. A stainless steel or carbon steel motor cooling jacket shall encircle the stator housing, providing for dissipation of motor heat regardless of the type of pump installation. An integrated axial-flow propeller shall be located between the inner and outer mechanical seals providing a positive flow and circulation of the cooling liquid.

B. The cooling liquid shall pass the stator housing with the help of an inner cooling mantle to create a narrow space and in combination with turbulent flow providing for superior heat transfer.

C. The cooling system shall have one fill port and one drain port integral to the cooling jacket.

D. The cooling system shall provide for continuous pump operation in liquid or in air having a temperature of up to 40 degree C (104 degree F) Operational restrictions at temperatures below 40 degree C are not acceptable.

E. Fans or blowers are not acceptable.

2.5 BEARINGS AND SHAFT

A. Bearings – General:
   1. The shaft shall rotate on grease lubricated bearings. The support bearing, provided for radial forces, shall be a rolling bearing. The main bearings shall consist of a double row angular contact ball bearing.

B. Shaft – General:

1. Pump and motor shaft shall be a solid continuous shaft. The pump shaft is an extension of the motor shaft. Couplings shall not be acceptable. The pump shaft shall be of stainless steel EN 1.4057 or AISI 431.
2. The use of a main shaft material of lower quality than stainless steel with a stainless steel sleeve will not be considered equal to a fully stainless steel shaft.

2.6 MECHANICAL SEALS

A. General

1. Each pump shall be provided with a positively driven dual, tandem mechanical shaft seal system consisting of two seals, each having an independent spring system. The seal material shall consist of corrosion resistant wolfram carbide (Corrosion resistant tungsten carbide). The seals shall require neither maintenance nor adjustment and shall be capable of operating in either clockwise or counter clockwise direction of rotation without damage or loss of seal function. Should both seals fail and allow fluid to enter the stator housing, an alarm shall stop the pump before the fluid come into contact with the lower bearings, or the stator. The outer primary seal, located between the pump and seal chamber, shall contain one stationary and one positively driven rotating corrosion resistant tungsten-carbide ring. The inner secondary seal, located between the seal chamber and the seal inspection chamber shall be an active seal. The inner seal shall contain one stationary and one positively driven rotating corrosion resistant tungsten-carbide seal ring. The rotating inner seal ring shall have small back-swept grooves laser inscribed upon its face to act as a micro pump as it rotates, returning any fluid that should enter the dry motor chamber back into the lubricant chamber. All seal rings shall be individual solid sintered rings. Each seal interface shall be held in place by its own spring system. The seals shall not depend upon direction of rotation for sealing. Mounting of the lower seal on the impeller hub is not acceptable. Shaft seals without positively driven rotating members or conventional double mechanical seals containing either a common single or double spring acting between the upper and lower seal faces are not acceptable. The seal springs shall be isolated from the pumped media to prevent materials from packing around them, limiting their performance.
2. In the case of a seal cavity, the area about the exterior of the lower mechanical seal in the cast iron housing shall have cast in an integral concentric spiral groove. This groove shall protect the seals by causing abrasive particulate entering the seal cavity to be forced out away from the seal due to centrifugal action.
3. The following seal types shall not be considered acceptable or equal to the dual independent seal specified: shaft seals without positively driven rotating members, or conventional double mechanical seals containing either a common single or double spring acting between the upper and lower seal faces. No system requiring a pressure differential to offset pressure and to affect sealing shall be used.

B. Lubrication

1. Each pump shall be provided with a lubricant chamber for the shaft sealing system. The lubricant chamber shall be designed to prevent overfilling and shall provide capacity for lubricant expansion. The seal lubricant chamber shall have one drain and one inspection plug that are accessible from the exterior of the motor unit. The seal system shall not rely upon the pumped media for lubrication.
2. Seal lubricant shall be FDA Approved, nontoxic.

2.7 MOTOR

A. The pump motor shall be induction type with a squirrel cage rotor, housed in an air filled watertight chamber. The stator windings and stator leads shall be insulated with moisture resistant Class H insulation rated for 180 degree C (355 degree F). The stator shall be heat-shrink fitted into the stator housing. The use of bolts, pins or other fastening devices requiring penetration of the stator housing is not acceptable. The motor shall be specifically designed for submersible pump usage and designed for continuous duty pumping media of up to 40 degree C (104 degree F).

B. Thermal switches shall be embedded in the stator lead coils to monitor the temperature of each phase winding. These thermal switches shall be set to open at 140 degree C and shall be used in conjunction with and supplemental to external motor overload protection and shall be connected to the control panel. In addition, at least one analogue sensor shall be embedded in the phase windings to enable continuous measurement and recording of temperature.

C. The motor shall have a voltage tolerance of plus or minus 10%. The motor shall be designed for operation up to 40 degree C (104 degree F) ambient and with an average temperature rise of the stator windings not to exceed 80 degree C. A performance chart shall be provided showing curves for torque, current, power factor, input/output kW and efficiency. This chart shall also include data on starting and no load characteristics.

2.8 JUNCTION BOX

A. The cable entry junction chamber and motor shall be separated by a feed through type terminal board of non-hygroscopic material, which shall isolate the stator housing from foreign material gaining access through the pump top.

2.9 ELECTRICAL POWER CORD

A. General

1. The power cable shall be sized according to the NEC and ICEA standards and shall be of sufficient length to reach the junction box without the need of any splices. The outer jacket of the cable shall be oil resistant chlorinated polyethylene rubber. The motor and cable shall be capable of continuous submergence underwater without loss of watertight integrity to a depth of 65 feet or greater.

B. Cable Entry Seal

1. The cable entry seal design shall not require specific torque requirements to ensure a watertight and submersible seal. The cable entry shall consist of dual cylindrical elastomer sleeves, flanked by washers, all having a close tolerance fit against the cable and the cable entry. The sleeves shall be compressed by the cable entry unit, thus providing a strain relief function. The assembly shall permit easy changing of the cable. Epoxies, silicones, or other secondary sealing systems shall not be considered acceptable.

2.10 PROTECTION AND MONITORING

A. All stators shall incorporate three normally closed thermal switches in series to monitor the temperature of each phase winding. Should high temperature occur, the thermal switches shall open, stop the motor and activate an alarm.

B. Any leakage that occurs from the mechanical seals shall be gathered in a separate leakage chamber. A float leakage sensor shall detect water entering the leakage chamber. When activated, the control shall stop the motor and activate an alarm. The manufacturer shall provide a control and status relay to be mounted into any control panel.

2.11 SERVICEABILITY

A. The complete rotating assembly shall be capable of being removed from the volute without disturbing the suction piping, discharge piping, and volute. The motor housing, seal housing with seal plate and impeller still attached to the shaft shall be capable of being lifted out of the volute case from the top as one assembly.

2.12 SUPPORT

A. Though the pump may not require feet to support the unit while installed, the pump volute must have feet to support the unit when removed for service. Units which do not have feet upon which the unit can be supported when removed for service shall not be acceptable.

2.13 COUPLING/LIFTOUT SYSTEM

A. Guide Bars

1. The pump(s) shall be automatically and firmly connected to the discharge connection, guided by no less than two guide bars extending from the top of the station to the discharge connection. There shall be no need for personnel to enter the wet-well.

B. Hydraulic Sealing Flange

1. Sealing of the pumping unit to the discharge connection shall be accomplished by a machined metal to metal watertight contact. Sealing of the discharge interface with a diaphragm, O-ring or profile gasket will not be acceptable. No portion of the pump shall bear directly on the sump floor.
2. Though the pump may not require feet to support the unit while installed, the pump volute must have feet to support the unit when removed for service. Units

which do not have feet upon which the unit can be supported when removed for service shall not be acceptable.

C. Lifting Chain/Cable
1. Each pumping unit shall be provided with 30 feet of 316 stainless steel lifting chain or cable.
2. The access frame shall provide a hook to attach the chain or cable when not in use.
3. The working load of the lifting system shall be 50% greater than the pump unit weight.

2.14 TESTING

A. Commercial testing shall be required and include the following:
1. The pump shall be visually inspected to confirm that it is built in accordance with the specification as to HP, voltage, phase and hertz.
2. The stator motor leads shall be tested for integrity using a megohmmeter at the highest setting.
3. Pump shall be allowed to run dry to check for proper rotation.
4. With discharge piping attached and the pump submerged in water, take amp readings shall be taken in each leg to check for an imbalanced stator winding. If there is a significant difference in readings, the stator windings shall be checked with a bridge to determine if an unbalanced resistance exists. If so, the stator shall be replaced.
5. The pump shall be removed from the water, megaohmmeter tested again, dried and the motor housing filled with dielectric oil.

2.15 WARRANTY

A. The pump unit or any part thereof shall be warranted against defects in material or workmanship within one year from date of installation and shall be replaced at no charge with a new or manufactured part, F.O.B. factory or authorized warranty service station. The warranty shall not apply to damage resulting from accident, alteration, design, misuse or abuse.

PART 3 EXECUTION – Not Used

END OF SECTION

SECTION 33 32 19.01

WASTEWATER UTILITY PUMPING STATIONS – ELECTRICAL WORK

PART 1 GENERAL

1.1 SUMMARY

A. Section Includes:
1. Three phase electric service.
2. Electrical service enclosure.
3. Power supply and controls.
4. Breakers and switches.
5. Transformers.
6. Conduits and seal-offs.
7. Junction box between wet well and seal-offs.
8. Wiring.
9. Transfer switch.
10. Generator receptacle.

B. Related Sections:
1. Section 26 32 16 – Engine Generator
2. Section 26 36 23 – Automatic Transfer Switches
3. Section 33 32 19 – Public Utility Wastewater Utility Pumping Stations
4. Section 33 32 19.01 – Public Utility Wastewater Pumps
5. Section 33 32 19.02 –Public Utility Wastewater Pumping Stations – Electrical Work
6. Section 33 32 19.03 –Public Utility Wastewater Pumping Stations – Controls

1.2 UNIT PRICE – MEASUREMENT AND PAYMENT

A.

1.3 REFERENCES

A. Electrical equipment, materials and workmanship shall comply with all applicable codes, safety and fire law regulations at the location of the work and shall conform to applicable codes and standards of the organizations listed below.
1. Institute of Electrical and Electronic Engineers. (IEEE)
2. National Electric Code. (NEC)National Electrical Manufacturers Association (NEMA)
3. American National Standards Institute. (ANSI)
4. Underwriters Laboratories. (UL-508 or 913 for intrinsically safe)

1.4 SUBMITTALS

A. Section 01 33 00 - Submittal Procedures: Requirements for submittals.

B. Shop Drawings and Product Data: Submit shop drawings for:
1. Transformers.
2. Motor starters.
3. Wiring devices.
4. Service power surge protection.
5. Electrical service enclosure.
6. Transfer switch.

1.5 CLOSEOUT SUBMITTALS

A. Section 01 70 00 - Execution and Closeout Requirements: Requirements for submittals.

B. Project Record Documents: Record as-built drawings of electrical system schematics in CAD format and produce an electronic copy (PDF format).

C. Operations and Maintenance Data: Furnish an electronic copy (PDF format) of O&M Data for all equipment furnished under this Section.

D. Furnish an electronic copy (PDF format) and three (3) bound hard copies of the Project Record Documents and Operations and Maintenance Manuals in three ring binders indicating the Owner, Project Name, Date, Contractor and related Subcontractors.

1.6 QUALITY ASSURANCE

A. All equipment and materials shall be new and shall bear the manufacturers name and trade name. In cases where the standard has been established for the particular material, the material shall be so labeled. The equipment to be furnished shall essentially be the standard product of a manufacturer regularly engaged in the production of the required type of equipment for this type of work and shall be the manufacturers latest approved design. Equipment and material shall be suitably delivered and stored and shall be readily accessible for inspection. All items subject to moisture damage shall be stored in dry spaces. All material and equipment shall be protected against dirt, dust, water and chemical or mechanical injury, vandalism and theft.

1.7 PRE-INSTALLATION MEETINGS

A. Section 01 30 00 - Administrative Requirements: Pre-installation meeting.

B. Convene minimum one week prior to commencing work of this section.

1.8 FIELD MEASUREMENTS

A. Verify field measurements and elevations are as indicated on the plans.

1.9 DELIVERY, STORAGE, AND HANDLING

A. Section 01 60 00 - Product Requirements: Requirements for transporting, handling, storing, and protecting products.

B. Do not place materials on private property without written permission of property owner.

C. During loading, transporting and unloading, exercise care to prevent damage to materials.

D. Store all material in a cool, dry location out of direct sunlight and not in contact with petroleum products.

1.10 COORDINATION

A. Section 01 30 00 - Administrative Requirements: Coordination and project conditions.

B. Coordinate the Work with connection to existing municipal sewer utility service.

C. Coordinate electrical service connections to components furnished by utility companies.
1. Coordinate installation and connection of exterior underground and overhead utilities and services, including provision for service entrances and electricity-metering components.

PART 2 PRODUCTS

2.1 ELECTRIC SERVICE

A. General:
1. Furnish electrical service of the of the specified voltage as shown on on the plans.
2. Coordinate installation with electric utility.
3. Pay all fees.

B. Equipment For Utility Company Electricity Metering
1. Comply with requirements of electrical power utility company meter sockets.
2. Where Lift Station Enclosure permits mounting of electrical service equipment, mount to exterior wall as directed by the engineer. Otherwise construct a utility rack to house electrical service equipment (and generator automatic transfer switch where necessary).

C. Utility Rack Equipment
1. Posts: 4” Schedule 40 Pipe
2. Post Bases: Grade S2 Concrete in Accordance with Section 602 of the Michigan Department of Transportation Standard Specifications for Construction
3. Metal Framing: Metal Channel and related fittings, Galvanized ASTM A 123 or B 633
   a. Size Channel to support necessary loads associated with electrical meter socket, service disconnects, and other related equipment.
   b. Furnish midspan supports as necessary.
4. Hardware: Stainless Steel
5. Finish:
   a. Galvanized : Default
      1) ASTM A123 G90 or B633 Type III SC1

b. Paint: Where Specified
   1) Rust Inhibiting epoxy enamel paint applied after cleaning and phosphatizing
   2) Finish rated to withstand 400 hours salt spray when tested in accordance with ASTM B 117
   3) Color: Federal Highway Green

2.2 ELECTRICAL SERVICE ENCLOSURE

A. NEMA 3R or 4 enclosure fabricated from:
   1. 14 gauge galvanized steel with a baked ANSI gray finish inside and out over zinc phosphatized surface (default)
   2. Type 304 or 316L Stainless Steel (optional)

B. Door to include rolled lip, seamless gasket, continuous hinge.

C. Latching Mechanism:
   1. Indoor: stainless steel sliding door clamps on three sides
   2. Outdoor: 3-point latch with stainless steel handle with provisions for padlock.

2.3 POWER SUPPLY AND CONTROLS

A. Main Line Lugs
   1. General:
      a. Appropriately sized for the incoming supply power.

B. Main service breaker:
   1. General
      a. Sized for starting current for two pumps.
      b. UL listed for service entrance.
      c. NEMA 1 enclosures.

   2. Automatic Main Breaker - Type 2-Q frame
      a. Sizing: Q frame molded case circuit breaker properly sized for application.
      b. Overload Protection: Each pole of the breaker shall provide inverse time delay overload protection and instantaneous short circuit protection by means of a thermal magnetic element.
      c. Operation: Toggle type handle and shall have a Quick-make, Quick-break over center switching mechanism.
         1) Mechanism shall be mechanically trip free from the handle so that the contacts cannot be held closed against short circuits and abnormal currents.
         2) Tripping due to overload or short circuit shall be clearly indicated by the handle automatically assuming a position midway between the manual “ON” and “OFF” position.
         3) The minimum interrupting rating of the breaker shall be 10,000 amps at 240 VAC.

2.4 RELAYS

A. General
1. Duty Rating: Continuous Duty for continuous duty operation.
2. Type: Square base plug in type with integral LED indicator lights.
3. Dust Cover: Transparent Polycarbonate to protect from airborne dust and contaminants.
4. Sockets: Sockets shall have screw terminals with self-lifting clamps and terminal identification numbers located at each connection on the relay socket.

B. Contacts
1. Type: DPDT or 4PDT contacts, as required.
2. Rating: 10 amps at 300VAC.

C. Undervoltage Relay (select for 1 phase)
1. A under voltage relay shall be installed to monitor the incoming single phase power supply. The internal relay shall be energized and a LED indicator shall glow to indicate that the incoming power supply conditions are acceptable. The under voltage relay shall be used to disconnect all motor starter coil power when the input voltage drops below the setpoint voltage (brown out condition). The under voltage relay shall automatically reset when the fault condition has been corrected. The under voltage relay shall be protected with a input fuse on each incoming power supply phase.

D. Phase Monitor Relay (select for 3 phase)
1. A phase monitor relay shall be installed to monitor the incoming three phase power supply. The voltage level shall be adjustable and a LED indicator shall glow to indicate that the incoming power supply conditions are acceptable. The phase monitor relay shall be used to disconnect all motor starter coil power when the following conditions exist; Low voltage, Voltage unbalance, Phase loss, and Incorrect phase sequence. The phase monitor relay shall automatically reset when the fault condition has been corrected. The phase monitor relay shall be protected with a input fuse on each incoming power supply phase.

2.5 BREAKERS AND SWITCHES

A. Circuits:
1. Pump Circuit (one per Pump)
2. Control Circuit
3. Telemetry Circuit
4. Auxiliary Circuit for Convenience Receptacle (one per receptacle)

B. Pump and Auxiliary Circuit Breakers.
1. Pump Circuit Breakers - Type 2-Q frame: Each pump motor circuit shall be protected by a properly sized Q frame molded case circuit breaker. Each pole of these breakers shall provide inverse time delay overload protection and instantaneous short circuit protection by means of a thermal magnetic element. The breaker shall be operated by a toggle type handle and shall have a Quick-make, Quick-break over center switching mechanism that is mechanically trip

free from the handle so that the contacts cannot be held closed against short circuits and abnormal currents. Tripping due to overload or short circuit shall be clearly indicated by the handle automatically assuming a position midway between the manual "ON" and "OFF" position. The minimum interrupting rating of the breaker shall be 10,000 amps at 240 VAC. Pump motor circuit breaker toggle shall be operable through a cutout in the inner door.

C. Motor Starters

1. Type 1-NEMA Rated Motor Starters: Each pump motor shall be provided with a NEMA rated full voltage non-reversing across-the-line magnetic motor starter. Starters shall provide single phase protection and be equipped with Class 10 or 20 bimetallic ambient compensated overload heaters. The adjustable overload heaters shall be sized according to the motor nameplate data. The motor starter coil shall be rated 120 volts. The motor starter shall be inoperable whenever the overload heaters are removed or have tripped. An overload reset push button shall be provided on the inner door for each motor starter.
2. Single Phase Start Kits: Single phase motor start and run control components shall be provided for proper operation of each single phase pump. The components shall include a start capacitor, run capacitor and motor start relay for each pump. Generally these components are supplied by the pump manufacturer, but can be provided by the control system manufacturer if component specifications and wiring diagrams are made available.

D. Surge Arrestors

1. Lightning Arrester: Provide a solid state lightning arrester connected to the incoming supply power at the main line lugs or power distribution block. The lightning arrester shall be designed to protect control equipment from damage due to lightning strikes on the incoming power supply line.
2. Surge Arrester: Provide a solid state surge suppresser connected to the incoming supply power at the main line lugs or power distribution block. The surge suppresser shall be designed to protect control equipment from damage due to transient surges on the incoming power supply line.

2.6 TRANSFORMERS

A. For 120 VAC or Intrinsic Safe Panels: Transformers shall be sufficiently sized to provide 120/24VAC control power.

B. Protection for the transformer shall be provided according to the National Electric Code.

2.7 CONDUIT

A. Interior Conduits:

1. Rigid galvanized steel, UL listed and 1/2 inch minimum size. ANSI C80.1, threaded only as noted on drawings.

B. Exterior and Below Grade Conduits:

1. Rigid Nonmetallic Conduit: Extra Heavy Smooth Wall Schedule 80 PVC Conduit, fittings and accessories in accordance with ASTM D 1784, compliant with NEMA TC-2 and TC-3 and UL 651 specifications.

2.8 BOXES

A. General: Pull boxes, junction boxes: UL listed, liquid tight, dustproof, conforming to JIC standards cast malleable iron gasketed with cast hot dip galvanized blank or nipple covers held in place with stainless steel screws. ANSI C80.41966 (R 1969), sized per NEC Article 370.

B. Non-Hazardous Areas: NEMA 4X

C. Indoor Hazardous Areas: NEMA 7

D. Outdoor Hazardous Areas: NEMA 8

E. Hazardous areas are: Class 1, Division 1, Group D.
1. Install in accordance with NEC Article 501.

2.9 WIRING

A. General:
1. All wiring shall be in conduit, except within panels, junction boxes, and within the wet well where cables supply power/control to floats, level transducer, motors, and other equipment.
2. All conduit entries shall be sealed to prevent moisture and gas vapors from entering the control system enclosure.

B. Power Rating:
1. All power wiring shall be rated for 600 volts.
2. Control circuit wiring inside the panel shall be (16) gauge minimum, type MTW or THW, rated for 300 volts.

C. Conductors shall be color coded in the same colors throughout the entire panel.

2.10 LIFT STATION CONTROL PANEL

A. Refer to Section 33 32 19.03 – Public Utility Wastewater Pumping Station Controls and Instrumentation.

2.11 TRANSFER SWITCH:

A. General
1. Double throw safety switch.
2. 3 pole, 600 VAC, 200 amp rating.
3. UL listed.

B. Positions: On / Off / Generator with Mechanical interlock.

C. A warning sign stating "DANGER -- Disconnect all sources of power before opening door" shall be installed on the inner door.

D. Omit Generator switch position where standby emergency generator and automatic transfer switch are available.

2.12 GENERATOR RECEPTACLE:

A. Where emergency standby power generation is not available, provide a 200 A, 600 VAC generator receptacle with back box, angle adapter, housing and spring door assembly.

B. Cooper Industries Arktite AR2042 - S22 or Engineer Approved Equal. Verify Hub Size and lug style are compatible with Owner's generator plug.

C. Where Generator Plug cannot be mounted to panel or enclosure, mount transfer switch and receptacle assembly to utility rack with other electrical service equipment.

2.13 GROUNDING

A. Materials: #2/0 bare copper wire and 3/4 inch x 20 feet copperweld ground rod.

B. Connections between grounding elements: Thermoweld where concealed, mechanical where exposed to view.

C. Grounding conductor penetrating concrete surface: 5/8 inch solid copper-clad rod.

D. Ground resistance: 25 ohms or less.

2.14 EQUIPMENT IDENTIFICATION

A. All electrical equipment shall be identified in accordance with these specifications. All identification labels, both within the enclosure and external, shall be engraved nameplates attached with stainless steel machine screws, photo etched, silk screened, or laser-screened laminated mylar. All control wiring shall be numbered on each termination.

B. Engraved nameplates attached with stainless steel machine screws, photo etching, silk screened, or laser-screened laminated mylar shall be provided to identify all individually mounted push-buttons, rocker switches, lights, meters, circuit breakers, motor starters, transformers, relays, fuses, phase monitors, surge arrester and any other equipment for which identification is required for eventual service or replacement. This includes the appropriate equipment within the cabinet. Embossed tape is not acceptable.

PART 3 EXECUTION

3.1 INSTALLATION

A. In accordance with the plans, approved shop drawings, manufacturer's recommendations, local, state and national codes.

B. Install power meter socket from the utility company on new utility rack or rear of panel enclosure.

C. Run ground conductor into service enclosure and ground according to National Electrical Code.

3.2 ELECTRICAL – METERING EQUIPMENT

A. Install metering equipment supplied by the utility company in accordance with written requirements. Provide grounding and empty conduits as required by utility company.

3.3 TESTING AND INSPECTION

A. Test grounding of panel and electrical equipment. Report test results to the Owner.

B. Schedule inspection of station electrical equipment by local inspector. Pay all fees.

C. Address comments from inspector and make station ready for start-up.

END OF SECTION

SECTION 33 32 19.03

WASTEWATER UTILITY PUMPING STATIONS – CONTROLS

PART 1 GENERAL

1.1 SUMMARY

A. Section Includes:
1. Control Panel Enclosures
2. Lift Station Pump Controllers
3. Level Transducer
4. Panel Devices
5. Telemetry System
6. Equipment Identification

B. Related Sections:
1. Section 26 32 16 – Engine Generator
2. Section 26 36 23 – Automatic Transfer Switches
3. Section 33 32 19 –Wastewater Utility Pumping Stations
4. Section 33 32 19.01 – Wastewater Utility Pumping Station – Submersible Pumps
5. Section 33 32 19.02 - Wastewater Utility Pumping Stations – Electrical Work
6. Section 33 32 19.03 - Wastewater Utility Pumping Stations – Controls and Instrumentation

1.2 REFERENCES

A. Electrical equipment, materials and workmanship shall comply with all applicable codes, safety and fire law regulations at the location of the work and shall conform to applicable codes and standards of the organizations listed below.
1. Institute of Electrical and Electronic Engineers. (IEEE)
2. National Electric Code. (NEC)National Electrical Manufacturers Association (NEMA)
3. American National Standards Institute. (ANSI)
4. Underwriters Laboratories. (UL-508 or 913 for intrinsically safe)

1.3 SUBMITTALS

A. Section 01 33 00 - Submittal Procedures: Requirements for submittals.

B. Shop Drawings and Product Data: Submit shop drawings for:
1. Control Panel Enclosures
2. Lift Station Pump Controllers
3. Level Transducer
4. Panel Devices
5. Telemetry System
6. Equipment Identification

1.4 CLOSEOUT SUBMITTALS

A. Section 01 70 00 - Execution and Closeout Requirements: Requirements for submittals.

B. Project Record Documents: Record as-built drawings of electrical system schematics in CAD format and produce an electronic copy (PDF format).

C. Furnish an electronic copy (PDF format) and three (3) bound hard copies of the Project Record Documents and Operations and Maintenance Manuals in three ring binders indicating the Owner, Project Name, Date, Contractor and related Subcontractors.

1.5 QUALITY ASSURANCE

A. Manufacturer Experience
1. UL Certification
a. The manufacturer of the control system shall be certified by Underwriters Laboratories (UL) as being a UL 508 listed manufacturing facility and certified to install a serialized label for quality control and insurance liability considerations.

B. Liability Insurance
1. The manufacturer of the control system must carry blanket liability insurance of at least ten (10) million dollars.

C. Experience
1. The manufacturer of the control system must be able to document ten years of experience in successfully designing and manufacturing similar control systems for wastewater pumping applications.

D. Manufacturer Quality Control
1. The complete control system shall be functionally tested at the manufacturing facility and certified as a complete system to assure proper operation per specification. All components must be mounted with stainless steel hardware.

E. Manufacturer Approval
1. Manufacturers listed in this specification do not constitute approval. All controls must have the capabilities and functions as outlined in the specifications.

1.6 PRE-INSTALLATION MEETINGS

A. Section 01 30 00 - Administrative Requirements: Pre-installation meeting.

B. Convene minimum one week prior to commencing work of this section.

1.7 FIELD MEASUREMENTS

A. Verify field measurements and elevations are as indicated on the plans.

1.8 DELIVERY, STORAGE, AND HANDLING

A. Section 01 60 00 - Product Requirements: Requirements for transporting, handling, storing, and protecting products.

B. Do not place materials on private property without written permission of property owner.

C. During loading, transporting and unloading, exercise care to prevent damage to materials.

D. Store all material in a cool, dry location out of direct sunlight and not in contact with petroleum products.

1.9 COORDINATION

A. Section 01 30 00 - Administrative Requirements: Coordination and project conditions.

B. Coordinate the Work with connection to existing municipal sewer utility service.

C. Coordinate electrical service connections to components furnished by utility companies.
1. Coordinate installation and connection of exterior underground and overhead utilities and services, including provision for service entrances and electricity-metering components.

PART 2 PRODUCTS

2.1 ENCLOSURE

A. General:
1. NEMA 3R or 4 enclosure fabricated from:
a. 14 gauge galvanized steel with a baked ANSI gray finish inside and out over zinc phosphatized surface (default)
b. Type 304 or 316L Stainless Steel (optional)
2. Door to include rolled lip, seamless gasket, continuous hinge.
a. Latching Mechanism:
1) Indoor: stainless steel sliding door clamps on three sides
2) Outdoor: 3-point latch with stainless steel handle with provisions for padlock.
3. Data pocket on inside of door
4. Ventilation: 2 Louver plates with filters
5. Floor Stand: 12” height.
6. Grounding: 1” x 6” x 1/4” Copper Ground Bus

B. Manual Transfer Switch
1. See Section 33 32 19.01 - Wastewater Utility Pumping Stations – Electrical Work.

C. Panel Door Controls and Indicators:
1. Furnish the following controls, indicators, and devices on the panel door:

a. Pump Controller HMI or Window to Backpanel Mounted PLC
b. Hour Meters (1 per pump)
c. Hand-Off-Automatic toggle switch (1 per pump)
d. Indicator Lights and Reset Switches as described herein.
e. 120V GFI Receptacle with Circuit Breaker
f. Overload Reset Switch (1 Per Pump)
g. Ammeter with phase selector toggle switch (1 per pump)

2. Include cut-outs and labels for all circuit breaker toggles, control switches and indicators.
3.

D. Hinged Inner Door (outdoor panels only)
1. Fabricated from 5052-H32.080 marine alloy aluminum. Door to be completely removable and held closed with at least (2) hand operated 1/4 turn fasteners.
2. Mount Panel Controls and Indicators to Hinged Inner Door
3. Mount Transfer Switch with mechanical interlock to Hinged Inner Door.

E. Backpanel
1. Removable backpanel shall be fabricated from 12 gauge steel with a white finish.
2. Components shall be fastened to the backpanel using stainless steel pinhead machine screws. All devices shall be clearly labeled in accordance with the schematic ladder diagram.

F. Control Circuit Wiring
1. Control circuit wiring inside the panel shall be (16) gauge minimum, type MTW or THW, rated for 300 volts. All power wiring shall be rated for 600 volts. Conductors shall be color coded in the same colors throughout the entire panel.
2. All conduit entries shall be sealed to prevent moisture and gas vapors from entering the control system enclosure.

2.2 LEVEL INDICATING CONTROLLER (LIC)

A. General:
1. Panel mounted within NEMA 1 Enclosure.
2. Input voltage: 110-2303 VAC.
3. Programming: Hand held programmer (furnished with unit).

B. Product:
1. Siemens Energy & Automation, Incorporated, Milltronics HydroRanger 200.
2. Substitutions: Not Permitted

2.3 LEVEL TRANSDUCER

A. General
1. Type: Non-contacting ultrasonic level transducer
2. Range: 1 ft to 26 ft
3. Submersion Protection: IP 68 rated

B. Construction: PVDF body with CSM rubber face suitable for wastewater contact.

C. Mounting: 4" /ASME 150lb mounting flange with 1" NPT threads

D. Cable: 10 meters (32.81 ft)

E. Product
   1. Siemens Energy & Automation, Incorporated, Milltronics EchoMax XRS-5
   2. Substitutions: Not Permitted

2.4 PANEL DEVICES

A. Convenience Receptacle: A GFI receptacle shall be provided to protect against ground fault leakage and shock. The unit shall have a retractable ground pin and polarized blades for two (2) or three (3) wire receptacles. The unit shall require a reset after any ground fault interruption.

B. Heating System: A heating system shall be provided to maintain the internal temperature 2 - 3 degrees F above ambient temperature to prevent condensation inside the duplex control panel. A thermostat shall not be required.

C. Operating Mode Switch: The panel shall have a Hand-Off-Automatic rocker/toggle switch mounted on the inner door to select the operating mode for each pump.

D. Elapse Time Meters: A non-resettable elapse time meter shall be mounted on the inner door to record the accumulated running time for each pump. The elapse time meter shall be rated 120 VAC.

E. Resettable Cycle Counter: A recyclable cycle counter shall be mounted on the inner door to record the number of times each pump motor is called to run. The cycle counter shall be rated 120 VAC.

F. Lag Pump Time Delay: A lag pump time delay (1 - 60 second) relay shall be included to prevent simultaneous starting of both pumps after a power failure.

G. Pilot Light Indicators
   1. The panel shall have lights mounted on the inner door to indicate the ON or RUN operation of each pump. The panel shall have indicating lights mounted on the inner door to indicate the operation of each float level sensor. The panel shall have a indicating light mounted on the inner door to indicate high level alarm. Manual reset is accomplished by pressing the high level or common reset button located on the inner door after the high level condition has been removed.
   2. The panel shall have a indicating light mounted on the inner door to indicate low level alarm. Manual reset is accomplished by pressing the low level or common reset button located on the inner door after the water level has increased above the stop pumps level sensor.

H. Positive Run Verification: The panel shall have a "true" pump failure indicating light mounted on the inner door for each pump. The pump failure indicating light will be turned on when the motor does not draw full load current when called to run within an adjustable time-delay period. Each pump fail/positive run verification circuit shall

include the following components; adjustable current sensor, control relay, time-delay relay, two position man-auto reset selector switches, and a pump fail indicating light.

I. Motor Overtemperature Alarms: The panel shall have indicating lights mounted on the inner door to indicate motor over-temperature for each pump. Automatic reset is accomplished by allowing the motor to cool and self reset. Manual reset is accomplished by pressing the appropriate motor over-temperature reset button located on the inner door. Control power to the motor starter coil shall be disconnected when a over-temperature condition is detected.

J. Seal Failure Relays
1. The panel shall have indicating lights mounted on the inner door connected to moisture detection relays mounted on the back panel to indicate seal failure alarm for each pump. This circuit can only be reset by removing the water from the motor outer housing. Manual reset is accomplished by pressing the appropriate seal failure reset button located on the inner door after removing the water/moisture. The pump shall be allowed to continue operating when seal failure has been detected.
2. The panel shall have indicating lights mounted on the inner door connected to seal minder relays (ABS) mounted on the back panel to indicate seal failure alarm for each pump. This circuit can only be reset by removing the water from the motor outer housing. Manual reset is accomplished by pressing the appropriate seal failure reset button located on the inner door after removing the water/moisture. The pump shall be allowed to continue operating when seal failure has been detected.
3. The panel shall have indicating lights and reset buttons mounted on the inner door connected to a 24 VAC Control And Status module (Flygt Mini-CAS II) mounted on the back panel to indicate seal failure and over-temperature alarm for each pump. Manual reset is accomplished by pressing the appropriate Mini-CAS reset button located on the inner door. The pump shall not be allowed to continue operating when a seal failure or over-temperature has been detected.

K. Audible/Visual Alarm System:
1. Alarm System:
   a. The panel shall have a 12 VDC alarm system.
   b. The 12 VDC battery and associated electro-mechanical and solid state devices will be mounted on the back panel.
2. Alarm Beacon:
   a. A red/amber alarm beacon mounted on top of the panel.
   b. The alarm beacon shall be rated 120 VAC, 40/60W, and shall illuminate/flash for the following condition(s); high level alarm.
3. Audible Alarm:
   a. The audible alarm shall be rated 120 VAC, 90db at 2 feet (minimum), and shall sound for the following condition(s); high level alarm.
   b. A silence push button shall be mounted on the inner door.
4. Remote Alarm Enclosure (where specified)
   a. A separate enclosure shall be provided for remote mounting the visual and/or audible alarm devices from the duplex pump control panel.

b. The alarm enclosure shall be rated NEMA 4X and shall be fabricated from 14 gauge galvanized steel with a baked ANSI gray finish inside and out over zinc phosphatized surface.

L. Terminal Strip

1. The terminal strip shall be mounted on a 45° angle using rail offset brackets to angle up bottom side of terminals from back panel to ease field wiring connections. Rail offset brackets shall be zinc dichromate plated steel. All wiring within the control system enclosure should be installed in wiring duct and terminated at the terminal blocks.

M. Isolated Dry Contacts

1. The following dry alarm contacts shall be used to alert maintenance/service personnel of the following pump station conditions:
   a. High Level Alarm
   b. Low Level Alarm
   c. Motor Overload Alarm (for each pump)
   d. Seal Failure Alarm (for each pump)
   e. Motor Over-Temperature Alarm (for each pump)
   f. Pump Failure Alarm (for each pump)
   g. Power Failure Alarm
2. The panel shall provide the following dry alarm contacts wired to terminals for remote monitoring (contacts shall be either normally open or normally closed):
   a. Pump Motor on (for each pump)
   b. Pump Motor off (for each pump)
   c. High Level Alarm
   d. Low Level Alarm
   e. Power Failure Alarm
   f. Station Door Alarm
   g. Pump Failure Alarm (for each pump)
   h. Motor Overload Alarm (for each pump)
   i. Seal Failure Alarm (for each pump)
   j. Motor Over-Temperature Alarm (for each pump)

2.5 TELEMETRY SYSTEM

A. General:

1. Remote SCADA shall be internet accessible, hosted by the communications system manufacturer and accessible by manageable password protected accounts. The system shall be compatible with other lift stations using the same internet access portal and providing access to all municipal lift stations simultaneously.
2. Remote monitoring shall provide real time station status, fully downloadable and customizable reports for pump starts, run time, temperature, flow metering, and rainfall as equipped.
3. The telemetry package shall be serviced by cellular communications consistent with the existing cellular service provider for the existing municipal lift stations.

B. Furnish telemetry system with 8 digital inputs and 2 analog inputs standard. Furnish supplemental expansion components for additional digital and analog inputs/outputs needed to provide the following data:
   1. Status Indication:
      a. Wet Well Level (Analog)
      b. Panel Temperature (Analog)
      c. Ambient/Control Room Temperature (Analog)
   2. Alarm Indications:
      a. High Level Alarm
      b. Low Level Alarm
      c. Power Failure Alarm
      d. Station Door Alarm
      e. Pump Failure Alarm (for each pump)
      f. Motor Overload Alarm (for each pump)
      g. Seal Failure Alarm (for each pump)
      h. Motor Over-Temperature Alarm (for each pump)

C. Products
   1. Mission Communications, Model M800
   2. Substitutions: Not Permitted

2.6 EQUIPMENT IDENTIFICATION

A. All electrical equipment shall be identified in accordance with these specifications. All identification labels, both within the enclosure and external, shall be engraved nameplates attached with stainless steel machine screws, photo etched, silk screened, or laser-screened laminated mylar. All control wiring shall be numbered on each termination.

B. Engraved nameplates attached with stainless steel machine screws, photo etching, silk screened, or laser-screened laminated mylar shall be provided to identify all individually mounted push-buttons, rocker switches, lights, meters, circuit breakers, motor starters, transformers, relays, fuses, phase monitors, surge arrester and any other equipment for which identification is required for eventual service or replacement. This includes the appropriate equipment within the cabinet. Embossed tape is not acceptable.

PART 3 EXECUTION

3.1 INSTALLATION

A. In accordance with the plans, approved shop drawings, manufacturer's recommendations, local, state and national codes.

B. Install power meter socket from the utility company on new utility rack or rear of panel enclosure.

C. Run ground conductor into service enclosure and ground according to National Electrical Code.

3.2 Testing and Startup

A. See Section 33 32 19 – Public Utility Wastewater Pumping Stations

END OF SECTION

SECTION 33 34 00

SANITARY UTILITY SEWERAGE FORCE MAINS

PART 1 GENERAL

1.1 SUMMARY

A. Section Includes:
1. Force Main Structures
2. Force Main Piping
3. Valves and Appurtenances
4. Utility Structures
5. Bedding Materials

B. Related Sections:
1. Related Sections:
2. Section 03 30 00 - Cast-In-Place Concrete.
3. Section 31 05 13 - Soils for Earthwork.
4. Section 31 05 16 - Aggregates for Earthwork.
5. Section 31 23 16 - Excavation.
6. Section 31 23 17 - Trenching.
7. Section 31 23 23 - Fill.
8. Section 33 01 32 - Sewer and Manhole Testing.
9. Section 33 05 15 - Polyethylene Manholes.
10. Section 33 05 24 – Utility Horizontal Directional Drilling
11. Section 33 31 00 - Sanitary Utility Sewerage Piping.
12. Section 3 32 16 – Packaged Wastewater Utility Pumping Stations

1.2 UNIT PRICE - MEASUREMENT AND PAYMENT

A. Force Main, (material), (size), HDD
1. Basis of Measurement: By foot.
2. Basis of Payment: Includes trenching, horizontal directional drilling, pipe and fittings, thrust restraints, tracer wire, bedding, backfill, compaction, disinfection, and testing.
3. Basis of Application: This pay item shall apply to all watermains that are installed by horizontal directional drilling.

B. Force Main, (material), (size), Tr Det __
1. Basis of Measurement: Foot
2. Basis of Payment: Includes trenching, hand trimming excavation, pipe and fittings, thrust restraints, protective coatings, electrical conductivity, bedding, backfill and compaction, and testing.

C. Force Main Air Release MH
1. Basis of Measurement: By each structure

2. Basis of Payment: Includes excavation, all required valves, fittings, components and accessories, connecting and sealing all pipe entries, bedding and backfill, compaction and testing. Payment for pipe and other related fittings will be included in the Force Main item of work.

D. Force Main Cleanout MH
1. Basis of Measurement: By each structure
2. Basis of Payment: Includes excavation, all required valves, fittings, components and accessories, connecting and sealing all pipe entries, bedding and backfill, compaction and testing. Payment for pipe and other related fittings will be included in the Force Main item of work.

1.3 REFERENCES

A. ASTM International:
1. ASTM D698 - Standard Test Method for Laboratory Compaction Characteristics of Soil Using Standard Effort (12,400 ft-lbf/ft3 (600 kN-m/m3)).
2. ASTM D1557 - Standard Test Method for Laboratory Compaction Characteristics of Soil Using Modified Effort (6,000 ft-lbf/ft3 (2,700 kN-m/m3)).
3. ASTM D2774 - Standard Practice for Underground Installation of Thermoplastic Pressure Piping.
4. ASTM D3261 - Standard Specification for Butt Heat Fusion Polyethylene (PE) Plastic Fittings for Polyethylene (PE) Plastic Pipe and Tubing.
5. ASTM D3350 - Standard Specification for Polyethylene Plastics Pipe and Fitting Materials.
6. ASTM F714 - Standard Specification for Polyethylene (PE) Plastic Pipe (SDR-PR) Based on Outside Diameter.
7. ASTM F2164 - Standard Practice for Field Leak Testing of Polyethylene (PE) Pressure Piping Systems Using Hydrostatic Pressure.
8. ASTM F2620 - Standard Practice for Heat Fusion Joining of Polyethylene Pipe and Fittings.

B. American Water Works Association:
1. AWWA C104 - American National Standard for Cement-Mortar Lining for Ductile-Iron Pipe and Fittings for Water.
2. AWWA C110 - American National Standard for Ductile-Iron and Grey-Iron Fittings, 3 in. through 48 in. (75 mm through 1200 mm), for Water and Other Liquids.
3. AWWA C111 - American National Standard for Rubber-Gasket Joints for Ductile-Iron Pressure Pipe and Fittings.
4. AWWA C151 - American National Standard for Ductile-Iron Pipe, Centrifugally Cast, for Water.
5. AWWA C900 - Polyvinyl Chloride (PVC) Pressure Pipe and Fabricated Fittings, 4 In. Through 12 In. (100 mm Through 300 mm), for Water Transmission and Distribution
6. AWWA C901 - Polyethylene (PE) Pressure Pipe and Tubing, 1/2 In. (13 mm) through 3 In. (76 mm), for Water Service
7. AWWA C905 - Polyvinyl Chloride (PVC) Pressure Pipe and Fabricated Fittings, 14 In. through 48 In. (350 mm through 1,200 mm)

8. AWWA C906 - Polyethylene (PE) Pressure Pipe and Fittings, 4 In. Through 65 In. (100 mm Through 1,650 mm), for Waterworks
9. AWWA M55 – Manual of Water Supply Practices, PE Pipe – Design and Installation.

1.4 SUBMITTALS

A. Section 01 33 00 - Submittal Procedures: Requirements for submittals.

B. All drawings are to be computer generated.

C. Shop Drawings: Submit shop drawings for pipe, valves, fittings and accessories. Indicate piece numbers and locations and restrained joint locations.

D. Product Data: Submit data indicating pipe material used, valves, fittings, pipe accessories, restrained joint details and materials.

E. Design Data: Submit restrained joint design data and calculations for pipe establishing lengths of restrained joint piping required and boring plan for pipe installed by Horizontal Directional Drilling.

F. Manufacturer's Installation Instructions: Indicate special procedures required to install Products specified.

G. Manufacturer's Certificate: Certify products meet or exceed specified requirements.

1.5 CLOSEOUT SUBMITTALS

A. Section 01 70 00 - Execution and Closeout Requirements: Requirements for submittals.

B. Project Record Documents: Record location of pipe runs, connections, and invert elevations.

C. [Identify and describe unexpected variations to subsoil conditions or discovery of uncharted utilities.]

1.6 QUALITY ASSURANCE

A. Design restrained joints in accordance with DIPRA Section 1X Standards.

B. Maintain one copy document on site.

1.7 PRE-INSTALLATION MEETINGS

A. Section 01 30 00 - Administrative Requirements: Pre-installation meeting.

B. Convene minimum one week prior to commencing work of this section.

1.8 FIELD MEASUREMENTS

A. Verify field measurements and elevations are as indicated on the plans.

1.9 DELIVERY, STORAGE, AND HANDLING

A. Section 01 60 00 - Product Requirements: Requirements for transporting, handling, storing, and protecting products.

B. Do not place materials on private property without written permission of property owner.

C. During loading, transporting and unloading, exercise care to prevent damage to materials.

D. Do not drop pipe or fittings.

E. Avoid shock or damage to pipe.

F. Take measures to prevent damage to exterior surface or internal lining of pipe.

G. Do not stack pipe higher than recommended by pipe manufacturer.

H. Store gaskets for mechanical and push-on joints in cool, dry location out of direct sunlight and not in contact with petroleum products.

1.10 COORDINATION

A. Section 01 30 00 - Administrative Requirements: Coordination and project conditions.

B. Coordinate the Work with connection to existing municipal sewer utility service.

PART 2 PRODUCTS

2.1 FORCE MAIN PIPE

A. Products:
1. Restraining Glands:
a. Ebaa Iron Sales, Inc.: Series 1100.
b. Ford Meter Box Company, Inc.: Uni-Flange Series 1400.
c. Romac Industries, Inc.: GripRing.
d. Substitutions: Not Permitted.
2. Restraining Harnesses:
a. Ebaa Iron Sales, Inc.: Series 1700.
b. Ford Meter Box Company, Inc.: Uni-Flange Series 1450.
c. Substitutions: Not Permitted.

B. Ductile Iron Pipe: AWWA C151.
1. Bituminous outside coating: AWWA C151.
2. Cement Mortar Lining: AWWA C104, standard thickness.

3. Pipe Thickness Class: AWWA C150, thickness class 52.
4. Joints:
   a. Mechanical and Push-On Joints: AWWA C111.
   b. Flanged Joints: AWWA C115.
   c. Rubber Gaskets: AWWA C111. Locking gaskets not permitted.
5. Fittings: AWWA C110, ductile-iron fittings or AWWA C153, ductile-iron compact fittings.
   a. Coating and Lining:
      1) Bituminous Coating: AWWA C110.
      2) Cement Mortar Lining: AWWA C104, standard thickness.
   b. Joints: AWWA C111, mechanical joints.
6. Polyethylene Encasement: AWWA C105 polyethylene jacket.
7. Restraints:
   a. Restraining Glands: Ductile iron glands with continuous or individual gripping wedges.
   b. Restraining Harnesses: Ductile iron restraining rings with individual gripping wedges, ductile iron follower rings, and low alloy steel tie bolts or rods.
8. Electrical Conductivity: Provide copper conductivity straps, factory welded to pipe ends with field installed jumper strap and silicon-bronze bolts.

C. Polyethylene Pipe: AWWA C906.
1. Material: ASTM D3350, high density polyethylene designation code PE3608 or higher. Minimum cell classification PE345464C. Pipe material shall be marked for marked for Sanitary Service, black with green stripes.
2. Pressure Class: AWWA C906, 160 psig.
3. Outside Diameter: Polyethylene pipe shall have the same outside diameter as equivalent size of ductile iron pipe (DIOD).
4. Joints: Thermal butt fusion.
5. Fittings: ASTM D3261 for butt fusion joints. Fittings shall be made of the same material, conform to the same pressure class, and have the same outside diameter at piping.
6. Electrical Conductivity: Provide tracer wire parallel to polyethylene pipe.

2.2 VALVES

A. General: Valves with non stainless steel metal body or internals shall be lined with a fusion bonded epoxy lining material suitable for exposure to wastewater.

B. Check Valves: AWWA C508 Swing Check Valve
1. Ductile Iron Body, ANSI Class 125/150 Flanged End
2. Pressure Rating: 250 psi
3. Fully Opening
4. Closure: Lever and Weight or Lever and Spring
5. Disc Material: Ductile Iron with BUNA-N Rubber Disc Seat
6. Shaft Material: 300 Series Stainless Steel
7. Body Seat: 300 Series Stainless Steel
8. Ball-type check valves, inline or “sinking ball” type, will not be permitted.
9. Products

a. APCO CVS 250/250A
b. Val-Matic 7800 Series
c. Substitutions: Not Permitted.

C. Plug Valves: AWWA C517 Resilient Seated Cast Iron Eccentric Plug Valve Ductile Iron Body, ANSI Class 125/150 Flanged End
1. Pressure Rating: 250 psi (min)
2. Full Port Type (100% Opening)
3. Operation: Direct Nut w/ Lever and adjustable memory stop (default)
4. Manual geared w/ handwheel or valve box operation where specified.
5. Bearing Material: 300 Series Stainless Steel
6. Plug Material: Ductile Iron with BUNA-N Rubber Lining
7. Products:
a. DeZurik PEC
b. Val-Matic Cam-Centric
c. Substitutions: Not Permitted

2.3 COMBINATION AIR VALVES

A. Products
1. APCO Series 440 SCAV
2. Val-Matic Series 801
3. Substitutions: Not Permitted

B. General
1. Unless otherwise shown on the plans, furnish single body combination air valves.
2. Sizing by manufacturer based on design flow rate and municipal wastewater characteristics.

C. Materials:
1. Body: Cast Iron
2. Internal Components: Stainless Steel
3. Seat Material: BUNA-N Rubber

D. Options
1. Blowoff valve
2. Back-flushing kit for severe service wastewater applications

2.4 VALVE BOXES

A. Products:
1. East Jordan Iron Works: 8560 Series.
2. Tyler Union: 6960 Series.
3. Substitutions: Section 01 60 00 - Product Requirements.

B. Domestic cast iron, three-piece, screw type.

C. Base Section:
1. Valves 8 inch and smaller: No. 4 round base.

2. Valves 10 inch to 12 inch: No. 6 round base.
3. Valves 16 inch and larger: No. 160 base.

D. Lid: Cast iron, non-locking, marked "Sewer" or “S.”

E. Protective Coating: Coal tar or bituminous coating.

2.5 UNDERGROUND PIPE MARKERS

A. Plastic Ribbon Tape:
1. Plastic Ribbon and Trace Wire Tape: Brightly colored green continuously printed with "SEWER FORCE MAIN" in large letters, minimum 6 inches wide by 4 mils thick, with magnetic detectable conductor manufactured for direct burial service.

B. Tracing Wire: If PVC or HDPE pipe is used in this project
1. Trace Wire: Magnetic detectable conductor, 30 mil colored plastic covering, #10 AWG. Approved for type of pipe installation
2. Color: Green.
3. Connectors: Direct-bury type connectors approved by manufacturer of tracer wire.
4. Access Boxes
   a. Test Pit Access Points shall provide direct access to tracer wire
   b. Lids shall be color-coded in accordance with APWA standard color scheme and contain encapsulated magnets for easy location.
   c. Color: Green
   d. Type:
      1) Outside Paved Areas - Lite Duty Adjustable type
      2) Within Paved Areas – Roadway Type approved for heavy traffic
5. Grounding
   a. Drive in Magnesium Anode approved by manufacturer of tracer wire.

2.6 UTILITY STRUCTURES

A. Precast Concrete Valve Vaults: Conform to Section 33 05 14.

B. Frames and Covers: Conform to Section 33 05 14.

C. Cast-in-Place Concrete Structures (Where specified) - Cast-in-place structures shall be in accordance with Section 03 30 00 – Cast-in-Place Concrete.

2.7 BEDDING AND COVER MATERIALS

A. Bedding and Cover: Granular material Class II as defined by Michigan Department of Transportation 2012 Standard Specifications for Construction Table 902-3.

B. Suitable on site material may be utilized as bedding and cover with approval of Engineer.

C. Soil Backfill from Above Pipe to Finish Grade: As specified in Section 31 23 17 - Trenching.

PART 3 EXECUTION

3.1 EXAMINATION

A. Section 01 30 00 - Administrative Requirements: Verification of existing conditions before starting work.

B. Verify trench cut is ready to receive work and excavations, dimensions, and elevations are as indicated on Drawings.

3.2 PREPARATION

A. Identify required lines, levels, contours and datum locations.

B. Locate, identify, and protect utilities to remain from damage.

C. Do not interrupt existing utilities without permission and without making arrangements to provide temporary utility services.
   1. Notify Engineer not less than 7 working days in advance of proposed utility interruption.
   2. Do not proceed without written permission from the Engineer.

D. Cut pipe ends square, ream pipe and tube ends to full pipe diameter, remove burrs. Use only equipment specifically designed for pipe cutting. The use of chisels or hand saws will not be permitted. Grind edges smooth with beveled end for push-on connections.

E. Remove scale and dirt on inside and outside before assembly.

F. Prepare pipe connections to equipment with flanges or unions.

3.3 BEDDING

A. Excavate pipe trench in accordance with Section 31 23 17 for Work of this Section. Hand trim excavation for accurate placement of pipe to elevations indicated on Drawings.

B. Dewater excavations to maintain dry conditions and preserve final grades at bottom of excavation.

C. Provide sheeting and shoring in accordance with Section 31 23 17.

D. Place bedding material at trench bottom, level fill materials in one continuous layer not exceeding 6 inches compacted depth; compact to 95 percent maximum density per ASTM D1557.

E. Backfill around sides and to top of pipe with cover fill; tamp in place and compact to 95 percent maximum density per ASTM D1557.

F. Maintain optimum moisture content of fill material to attain required compaction density.

3.4 INSTALLATION - PIPE

A. Install pipe, fittings, and accessories in accordance with Drawings.

B. Handle and assemble pipe in accordance with manufacturer's instructions and as indicated on Drawings.

C. Connect to municipal sewer system.

D. Connect continuity straps in accordance with manufacturer's instructions.

E. Steel Rods, Bolt, Lugs, and Brackets: Coat buried steel with one coat of coal tar coating before backfilling.

F. Maintain 10 ft horizontal and 18 inches vertical separation of water main from sewer piping.

G. Install pipe to indicated elevation.

H. Flanged Joints: Do not use in underground installations except within structures.

I. Route pipe in straight line. Relay pipe that is out of alignment or grade.

J. Install pipe with no high points except where indicated on Drawings. If unforeseen field conditions arise which necessitate high points, seek direction from Engineer regarding hydrant locations or air release valves.

K. Install pipe to have bearing along entire length of pipe. Excavate bell holes to permit proper joint installation. Do not lay pipe in wet or frozen trench.

L. Prevent foreign material from entering pipe during placement.

M. Install pipe to allow for expansion and contraction without stressing pipe or joints.

N. Close pipe openings with watertight plugs during work stoppages.

O. Install access fittings to permit flushing of force main performed under Section 33 13 00.

P. Establish elevations of buried piping with not less than 5 ft of cover. Measure depth of cover from final surface grade to top of pipe barrel.

3.5 MANHOLE STRUCTURES

A. See Section 33 05 13 – Public Manholes and Structures

B. Furnish Air-Release and Cleanout manholes shall be furnished with an 18" diameter x 24" deep gravel-packed sump.
   1. Where high groundwater is present, omit sump and construct watertight manhole in accordance with Sanitary Manhole typical details.

C. Air- Release Valve Manhole
   1. Air-Release valves shown on the plan are located at local high points in the force main.
   2. Ensure that entrained air is capable of reaching these structures.

3.6 POLYETHYLENE ENCASEMENT

A. Encase piping in polyethylene where to prevent contact with surrounding backfill material.

B. Install in accordance with AWWA C105.

C. Terminate encasement 6 inches below grade at hydrants and valve boxes..

3.7 THRUST RESTRAINT

A. Install joint restraining glands on all mechanical joint ends for hydrants, valves, and fittings

B. Install joint restraining harnesses for push on joint pipe according to Schedules.

C. Install joint restrains in accordance with manufacturer's instructions.

D. Protect metal restrained joint components against corrosion by applying a coal tar or bituminous coating.

E. Concrete thrust blocks are not permitted unless approved by Engineer.

3.8 TRACING EQUIPMENT

A. General
   1. Trace wire installation shall be performed in such a manner that allows proper access for connection of line tracing equipment, proper locating of wire without loss or deterioration of low frequency (512Hz) signal for distances in excess of 1,000 linear feet, and without distortion of signal caused by multiple wires being installed in close proximity to one another.
   2. Trace wire systems must be installed as a single continuous wire, except where using approved connectors. No looping or coiling of wire is allowed.

B. Installation
   1. Trace wire shall be installed at the bottom half of the pipe and secured (taped/tied) at 5' intervals.
   2. Trace wire must be properly grounded as specified by the manufacturer.

3. Lay mainline trace wire continuously, by-passing around the outside of manholes/structures on the North or East side.
4. Trace wire must terminate at an approved trace wire access box color coded green and located directly adjacent to force main structures on the downstream side.

3.9 INSTALLATION – PIPE IDENTIFICATION

A. Plastic Marking tape on all sanitary sewerage force mains to distinguish between sanitary and water distribution utilities.
   1. Attached to the main at approximately 15 feet intervals with plastic cable ties.

B. Place Tracer Wire where PVC or HDPE pipes are installed
   1. Attached to the main at approximately 15 feet intervals with plastic cable ties.
   2. Solder splices copper-to-copper and encase in shrinkwrap tubes.
   3. Terminate tracer wire within cleanout manholes, air-release manholes, and discharge manholes. Where wiring is subject to corrosive sewer gases, such as discharge structures, seal end of wire with shrinkwrap tube and electrical tape.
   4. A minimum of 6 feet of wire shall be left accessible inside structures and at marked ends.
   5. The CONTRACTOR shall be responsible for testing continuity of wire locator.

3.10 BACKFILLING

A. Measure and record the distance between all fittings, valves, and hydrants prior to backfill.

B. Backfill around sides and to top of pipe in accordance with Section 31 23 17.

C. Maintain optimum moisture content of bedding material to attain required compaction density.

3.11 SEQUENCE OF TESTING

A. Conduct flushing, testing, and disinfection in the following sequence:
   1. High Velocity Flush (according to part 3.3 below)
   2. Hydrostatic Pressure and Leakage Testing (according to part 3.4 below)
   3. Connection to existing sewers (according to part 3.8 below)

3.12 HIGH VELOCITY FLUSH

A. Review proposed configuration and flushing procedure with engineer to verify compliance with the following standards:
   1. Minimum Velocity: 2.5 feet per second
   2. Minimum Duration: until 2 times the volume of the flushed force main has been discharged.

B. Provide and install all temporary appurtenances necessary to inject flushing water. This may include a temporary hydrant and fire hose if needed to achieve adequate flow rate.

C. Review proposed water source, configuration and flushing procedure with Engineer.

D. Notify water and sewer department.

E. Conduct high velocity flush to remove any debris and contaminants which may have entered pipe during construction.

F. Protect discharge from erosion and flooding

3.13 HYDROSTATIC PRESSURE AND LEAKAGE TESTING - DUCTILE IRON PIPE

A. Pressure test system. Repair leaks and re-test.

1. After completion of pipeline installation, including backfill, but prior to final connection to existing system, conduct, in presence of Engineer, concurrent hydrostatic pressure and leakage tests in accordance with AWWA C600.
2. Test pressure: 1.5 times the design working pressure at the lowest point in the test section. Do not exceed 1.5 times the pressure class of the pipe.
3. Conduct hydrostatic test for at least two-hour duration.
4. Fill section to be tested with water slowly, expel air from piping at high points. Install corporation cocks at high points. Close air vents and corporation cocks after air is expelled. Raise pressure to specified test pressure.
5. Observe joints, fittings and valves under test. Remove and renew cracked pipe, joints, fittings, and valves showing visible leakage. Retest.
6. Correct visible deficiencies and continue testing at same test pressure for additional 2 hours to determine leakage rate. Maintain pressure within plus or minus 5.0 psig of test pressure. Leakage is defined as quantity of water supplied to piping necessary to maintain test pressure during period of test.
7. Compute maximum allowable leakage by the following formula:

$L = (SD\sqrt{P})/C$
L = allowable leakage rate, in gallons per hour*
S = length of pipe tested, in feet
D = nominal diameter of pipe, in inches
P = average test pressure during hydrostatic test, in psig
C = 148,000
When pipe under test contains sections of various diameters, calculate allowable leakage from sum of computed leakage for each size.
*note: for a 2 hour test, multiply “L” by 2 to get the allowable leakage volume in gallons.

8. When test of pipe indicates leakage greater than allowed, locate source of leakage, make corrections and retest until leakage is within allowable limits. Correct visible leaks regardless of quantity of leakage.

3.14 HYDROSTATIC PRESSURE AND LEAKAGE TESTING - POLYETHYLENE PIPE

A. Pressure test system. Repair leaks and re-test.

1. After completion of pipeline installation, including backfill, but prior to final connection to existing system, conduct, in presence of Engineer, concurrent hydrostatic pressure and leakage tests in accordance with ASTM F2164 and AWWA M55.
2. Test pressure: 1.5 times the design working pressure at the lowest point in the test section. Do not exceed 1.5 times the pressure class of the pipe.
3. Isolate polyethylene piping from ductile iron piping and test separately.
4. Fill section to be tested 24 hours prior to conducting test. Fill with water slowly, expel air from piping at high points.
5. Raise pressure to specified test pressure. Supply makeup water as needed to maintain test pressure.
6. Observe joints, fittings and valves under test. Remove and renew cracked pipe, joints, fittings, and valves showing visible leakage. Retest.
7. After four hours discontinue supply of makeup water. Continue to monitor pressure for up to four additional hours.
8. If pressure remains within 5 percent of the test pressure for a one hour period, leakage is not indicated.
9. If test is not completed within 8 hours, depressurize piping. Wait a minimum of 8 hours prior to retesting.
10. When test of pipe indicates leakage, locate source of leakage, make corrections and retest until leakage is no longer indicated. Correct visible leaks regardless of quantity of leakage.

B. Special Test Procedures for Plastic Pipe:
1. The test procedure consists of two steps; the initial expansion and the test phases. To compensate for initial expansion of the pipe under test, sufficient make-up water should be added to the system at hourly intervals for 3 hours to return to the test pressure. After the completion of this first phase (around 4 hours after initially pressurizing the pipe under test), the actual test should begin. The test phase should not exceed 3 hours. After this testing period, a measured amount of make-up water should be added to return to the test pressure. The amount of make-up water shall not exceed the allowance given in the equation given above. Alternatively, testing for leakage can be done by maintaining the test pressure over a period of 4 hours, and then dropping the pressure by 10 psi. If the pressure remains steady (within 5% of the target value) for an hour, no leakage in the system is indicated.
2. WARNING: Under no circumstances shall the total time under test exceed eight (8) hours at 1 ½ times the pressure rating. If the test is not completed the test section shall be permitted to “relax” for eight (8) hours prior to the next testing sequence

3.15 FIELD QUALITY CONTROL

A. Section 01 40 00 - Quality Requirements.

B. Owner’s representative will perform laboratory testing of bedding material to determine gradation in accordance with ASTM C117 and ASTM C136.

C. Owner's representative will perform testing of bedding material to determine maximum density in accordance with ASTM D1557 or Michigan Cone Method.

D. Owner's representative will perform in place compaction tests of bedding and backfill material in accordance with the following:
   1. Density Tests: ASTM D2922.
   2. Moisture Tests: ASTM D3017.

E. Frequency of Tests: At each compacted bedding and backfill layer, one test for each 150 feet or less of trench length. Additional testing may be required at the discretion of the Engineer.

F. When tests indicate Work does not meet specified requirements, remove Work, replace and retest.

3.16 SCHEDULES

A. Joint Restraints:

Length of Pipe Requiring Joint Restraints

Pipe Diameter	Tees, 90˚ bends	45˚ bends	22 1/2˚ bends	11 1/4˚ bends	Dead Ends	Reducers (one size)	**
6	46	19	9	5	117	62	91
8	59	25	12	6	149	62	79
12	83	35	18	9	214	115	172
16	106	45	22	10	275	118	158
20	128	53	26	13	334	118	149

3.17 PROTECTION OF FINISHED WORK

A. Section 01 70 00 - Execution and Closeout Requirements: Requirements for protecting finished Work.

B. Protect pipe and aggregate cover from damage or displacement until backfilling operation is in progress.

END OF SECTION

SECTION 33 41 13

PUBLIC STORM UTILITY DRAINAGE PIPING

PART 1 GENERAL

1.1 SUMMARY

A. Section Includes:
1. Storm drainage piping.
2. Underground pipe markers.
3. Laterals and fittings.
4. Cleanouts.
5. Concrete encasement and cradles.
6. Bedding and cover materials.

B. Related Sections:
1. Section 31 23 33 - Trenching and Backfilling
2. Section 33 01 30.13 - Sewer and Manhole Testing
3. Section 33 05 13 - Public Manholes and Structures
4. Section 33 46 16 – Subdrainage Piping

1.2 PRICE AND PAYMENT PROCEDURES - UNIT PRICES

A. Stm. Sewer, (type) , __ inch:
1. Basis of Measurement: Foot, measured from center of structure to center of structure. Where pipe terminates in a tapered end section, measurement will not include length of tapered end section.
2. Basis of Payment: Includes trenching, hand trimming excavation, pipe and accessories, bedding, backfill, compaction, and testing.

B. Tapered End Section, Conc., __ inch:
1. Basis of Measurement: Each
2. Basis of Payment: Includes trenching, hand trimming excavation, tapered end section, bedding, backfill, compaction, and testing.

C. Tapered End Sect, Grate:
1. Basis of Measurement: Pound
2. Basis of Payment: Includes steel grate and attachment accessories for tapered end sections.

D. Tapered End Sect, Footing:
1. Basis of Measurement: Each
2. Basis of Payment: Includes excavation, bedding, concrete, reinforcing steel, backfill, and compaction.
3. Basis of Application: This pay item will apply where concrete footings for tapered end sections are required.

E. Stm. Sewer Service, __ inch:
   1. Basis of Measurement: Foot
   2. Basis of Payment: Includes trenching, hand trimming excavation, pipe and fittings, bedding, backfill, compaction, and testing.

F. Stm. Sewer Service, Cleanout:
   1. Basis of Measurement: Each
   2. Basis of Payment: Includes pipe and fittings, threaded cap, ball marker, and connection to existing service pipe or end cap.

G. Cleanout Riser Cover:
   1. Basis of Measurement: Each
   2. Basis of Payment: Includes cast iron cover over cleanout riser.
   3. Basis of Application: This pay item will apply where cleanouts are located in paved areas.

H. Sewer Bulkhead, __ inch
   1. Basis of Measurement: Each
   2. Basis of Payment: Includes concrete and/or masonry wall constructed inside sewer opening.
   3. Basis of Application: This pay item will apply where bulkheads are required to close an abandoned sewer.

1.3 REFERENCES

A. Abbreviations and Acronyms
   1. PVC: Poly(Vinyl Chloride)
   2. RCP: Reinforced Concrete Pipe

B. Reference Standards
   1. American Association of State Highway and Transportation Officials:
      a. AASHTO M306 - Standard Specification for Drainage, Sewer, Utility, and Related Castings
   2. American Concrete Pipe Association (ACPA):
      a. Concrete Pipe Installation Manual
   3. ASTM International:
      a. ASTM A48/A48M - Standard Specification for Gray Iron Castings
      b. ASTM A123/A123M - Standard Specification for Zinc (Hot-Dip Galvanized) Coatings on Iron and Steel Products
      c. ASTM A536 - Standard Specification for Ductile Iron Castings
      d. ASTM C55 - Standard Specification for Concrete Building Brick
      e. ASTM C76 - Standard Specification for Reinforced Concrete Culvert, Storm Drain, and Sewer Pipe
      f. ASTM C117 - Standard Test Method for Materials Finer than 75-µm (No. 200) Sieve in Mineral Aggregates by Washing
      g. ASTM C136 - Standard Test Method for Sieve Analysis of Fine and Coarse Aggregates
      h. ASTM C443 - Standard Specification for Joints for Concrete Pipe and Manholes, Using Rubber Gaskets.

i. ASTM C497 - Standard Specification for Test Methods for Concrete Pipe, Manhole Sections, or Tile
j. ASTM C923 - Standard Specification for Resilient Connectors Between Reinforced Concrete Manhole Structures, Pipes, and Laterals
k. ASTM C1173 - Standard Specification for Flexible Transitions Couplings for Underground Piping Systems
l. ASTM C1479 - Standard Practice for Installation of Precast Concrete Sewer, Storm Drain and Culvert Pipe Using Standard Installations
m. ASTM D1557 - Standard Test Methods for Laboratory Compaction Characteristics of Soil Using Modified Effort (56,000 ft-lbf/ft3)
n. ASTM D1784 - Standard Specification for Rigid Poly(Vinyl Chloride) (PVC) Compounds and Chlorinated Poly(Vinyl Chloride) (CPVC) Compounds
o. ASTM D2321 - Standard Practice for Underground Installation of Thermoplastic Pipe for Sewers and Other Gravity-Flow Applications
p. ASTM D2564 - Standard Specification for Solvent Cements for Poly(Vinyl Chloride) (PVC) Plastic Piping Systems
q. ASTM D2855 - Standard Practice for the Two-Step (Primer and Solvent Cement) Method of Joining Poly(Vinyl Chloride) (PVC) or Chlorinated Poly(Vinyl Chloride) (CPVC) Pipe and Piping Components with Tapered Sockets
r. ASTM D2922 - Standard Test Methods for Density of Soil and Soil-Aggregate in Place by Nuclear Methods (Shallow Depth)
s. ASTM D3017 - Standard Test Method for Water Content of Soil and Rock in Place by Nuclear Methods (Shallow Depth)
t. ASTM D3034 - Standard Specification for Type PSM Poly(Vinyl Chloride) (PVC) Sewer Pipe and Fittings
u. ASTM D3212 - Standard Specification for Joints for Drain and Sewer Plastic Pipes Using Flexible Elastomeric Seals
v. ASTM F477 - Standard Specification for Elastomeric Seals (Gaskets) for Joining Plastic Pipe
w. ASTM F656 - Standard Specification for Primers for Use in Solvent Cement Joints of Poly(Vinyl Chloride) (PVC) Plastic Pipe and Fittings.
x. ASTM F1336 - Standard Specification for Poly(Vinyl Chloride) (PVC) Gasketed Sewer Fittings

4. Michigan Department of Transportation (MDOT):
   a. MDOT 2012 Standard Specifications for Construction
   b. MDOT Density Testing and Inspection Manual, Current Edition

1.4 SUBMITTALS

A. Section 01 33 00 - Submittal Procedures: Requirements for submittals.

B. Product Data: Submit pertinent data for sewer pipe and fittings, flexible couplings, cleanout caps and covers, and underground pipe markers.

C. Materials Source: Submit source location and names of material suppliers.

D. Manufacturer's Installation Instructions:

1. Indicate special procedures required to install products specified.
2. Submit detailed description of procedures for connecting.

E. Manufacturer's Certificate: Certify products meet or exceed specified requirements.

1.5 CLOSEOUT SUBMITTALS

A. Section 01 70 00 - Execution and Closeout Requirements: Project Record Documents.

B. Project Record Documents: Accurately record actual locations of pipe runs, connections, manholes, inlets, catch basins, and invert elevations.
1. For all mains record length of pipe run, invert elevations and slope.
2. For all laterals record:
a. Y+: Distance from the downstream manhole to the wye fitting.
b. E+: Distance measured along the lateral centerline to the lateral end.
c. L: Perpendicular distance from the lateral end to main.
d. Two witness dimensions from the cleanout to a permanent structure.
1) Use manholes, catch basins, valves, hydrants, or property corners.
2) Do not witness to trees or building corners.

C. Identify and describe any alterations made due to subsoil conditions, discovery of uncharted utilities, or unanticipated conditions.

D. Test Reports: Submit reports indicating field tests made and results indicating conformance or non-conformance with specifications.

1.6 QUALITY ASSURANCE

A. Qualifications:
1. Manufacturers: Company specializing in manufacturing products specified in this section.
2. Installers: Company specializing in performing work of this section with minimum three years documented experience.

B. Preconstruction Testing:
1. Section 01 40 00 - Quality Requirements: Testing and Inspections by Owner.
2. Notify Engineer minimum two weeks prior to scheduled delivery of bedding and cover materials.
3. Allow Owner’s representative access to bedding and cover materials source for sampling and testing.
4. Confirm test results indicate conformance with specifications prior to delivery to site.
5. Owner reserves the right to collect and test additional samples of bedding and cover materials after delivery to site.

C. Single Source Responsibility: Furnish bedding and cover materials from single source throughout the Work.

1.7 DELIVERY, STORAGE, AND HANDLING

A. Section 01 60 00 - Product Requirements: Product Delivery Requirements and Product Storage and Handling Requirements.

B. During loading, transporting, and unloading of materials and products, exercise care to prevent any damage.

C. Do not place pipe or pipe materials on private property or in areas obstructing pedestrian or vehicle traffic.

D. Block individual and stockpiled pipe lengths to prevent moving.

E. Do not place pipe flat on ground. Cradle to prevent point stress.

F. Store UV sensitive materials out of direct sunlight.

1.8 FIELD CONDITIONS

A. Verify field measurements and elevations are as indicated on Drawings.
1. Measure invert elevations of existing downstream sewer at proposed connection point.
2. Measure elevation of existing pipes at proposed crossing locations.
3. Calculate proposed pipe slopes and verify clearance at crossings.
4. Notify Engineer of any discrepancies from Drawings or identified elevation conflicts at crossing locations.

B. Conduct operations not to interfere with, interrupt, damage, destroy, or endanger integrity of surface or subsurface structures or utilities, and landscape in immediate or adjacent areas.

PART 2 PRODUCTS

2.1 STORM DRAINAGE PIPE AND FITTINGS

A. Reinforced Concrete Pipe: ASTM C76, bell and spigot ends with provision for rubber gaskets.
1. Class: Use pipe with of the following Class based on the depth of cover measured from finished grade to top of pipe.

Depth of Cover (ft)	ASTM C76, Pipe Class
0-3, beneath influence of proposed pavement	Class IV
0-16	Class III
16-23	Class IV
23-33	Class V

2. Wall Type: A, B, or C per ASTM C76.
3. Joint Gaskets: ASTM C443, rubber compression gasket.

B. Plastic Pipe: ASTM D3034, Type PSM Poly(Vinyl Chloride) (PVC); bell and spigot style rubber ring sealed gasket joints.
   1. Wall Thickness: SDR 26.
   2. Joints: ASTM D3212, joints using elastomeric seals.
   3. Gaskets: ASTM F477, elastomeric gaskets.

C. Plastic Fittings: ASTM F1336, Poly(Vinyl Chloride) (PVC) gasketed sewer fittings; fabricated from SDR 26 pipe or molded.
   1. Joints: ASTM D3212, joints using elastomeric seals.
   2. Gaskets: ASTM F477, elastomeric gaskets.

2.2 ACCESSORIES

A. Tapered End Sections: Precast concrete, reinforced to same specification as pipe material, with bell end compatible with pipe.

B. Steel Grates for End Sections: Fabricated from weldable grade hot-rolled plain steel bars, hot-dip galvanized per ASTM A123/A123M, and sized to fit over precast concrete tapered end sections.

C. Resilient Pipe Connectors:
   1. Products:
      a. Fernco, Inc.: Qwik-Seal.
      b. NPC, Inc.: Kor-N-Tee.
      c. Substitutions: Section 01 16 00 - Product Requirements.
   2. ASTM C923, neoprene gasket with stainless steel clamp, suitable for connection of plastic pipe lateral to reinforced concrete pipe.

D. Riprap and Accessories: Natural stone as specified in Section 31 25 00 - Erosion and Sedimentation Controls.

E. Geotextile Blanket: MDOT 2012 Standard Specifications for Construction 910.03.A.

F. Mortar: MDOT 2012 Standard Specifications for Construction, Section 702.
   1. Type R-2 Mortar per Tables 702-1A and 702-1B.

G. Concrete Brick: ASTM C55 solid concrete brick with the following nominal size:
   1. Depth: 2 to 2½ inches.
   2. Width: 3½ to 3¾ inches.
   3. Length: 7½ to 8 inches.

2.3 FLEXIBLE COUPLINGS

A. Manufacturers:
   1. Fernco, Inc.
   2. Mission Rubber Company.
   3. Substitutions: Section 01 60 00 - Product Requirements

B. Flexible Couplings: ASTM C1173, Resilient, chemical-resistant, elastomeric coupling with two stainless steel clamps, stainless steel screws and housings.

2.4 CLEANOUTS

A. Plastic Cleanouts: ASTM D3034, Type PSM Poly(Vinyl Chloride) (PVC) threaded cleanout adapter and plug; solvent cement joints.

B. Include PVC sewer pipe fitting and riser to cleanout of same material as sewer piping.

C. Primer: ASTM F656, purple.

D. Solvent Cement: ASTM D2564, medium-bodied.

2.5 CLEANOUT RISER COVERS

A. Products:
1. EJ Group, Inc.: Model 1574.
2. Substitutions: Section 01 60 00 - Product Requirements

B. ASTM A48/A48M, Class 35B gray cast iron and/or ASTM A536 ductile iron construction.
1. Machined flat bearing surfaces.
2. Live Load Rating: 40,000 lbs.
3. Finish: Uncoated.

2.6 UNDERGROUND PIPE MARKERS

A. Products:
1. Tracer Wire:
a. NEPTCO, Inc.: Trace-Safe® wire and connectors.
b. Substitutions: Not permitted.
2. Ball Markers:
a. 3M: EMS iD Ball Marker – General Purpose 1428-XR/iD.
b. Substitutions: Not permitted

B. Tracer Wire: Water blocking tracer wire with 30 mil abrasion resistant HDPE outer jacket encasing 1,800 pound tensile strength polyester strength element and 19 AWG solid copper conductor, magnetically detectable.
1. Color: Purple.

C. Ball Markers: Round, high-density watertight polyethylene shell, impervious to minerals, chemicals, and temperature extremes normally found in the underground environment. RFID marker shall be encased within shell in a biodegradable mixture of propylene glycol and water.
1. Color: Purple.

2.7 CONCRETE ENCASEMENT AND CRADLES

A. Concrete: MDOT 2012 Standard Specifications for Construction, Section 701:
   1. Concrete Grade S3 per Tables 701-1A and 701-1B.

2.8 BEDDING AND COVER MATERIALS

A. Pipe Bedding and Cover: MDOT 2012 Standard Specifications for Construction, Section 902.07.
   1. Class III Granular Material per Table 902-3.
   2. Class II Granular Material per Table 902-3 may be substituted for Class III Granular Material with approval of Engineer

B. Suitable on site material may be utilized as pipe bedding and cover with approval of Engineer.

2.9 EQUIPMENT

A. Laser:
   1. Self-leveling with digital grade input.
   2. Accuracy: Plus or minus 1/16 inch over 100 feet
   3. Target: Manufactured for pipe installation, supplied with laser.

2.10 SOURCE QUALITY CONTROL

A. Test reinforced concrete pipe in accordance with ASTM C497.

PART 3 EXECUTION

3.1 EXAMINATION

A. Section 01 30 00 - Administrative Requirements: Verification of existing conditions before starting work.

B. Verify trench cut is ready to receive work and excavations, dimensions, and elevations are as indicated on Drawings. Notify Engineer of discrepancies.

C. Verify location of proposed manholes and catch basins for proper sewer alignment.

D. Verify end location of proposed laterals to match existing storm laterals or to provide alignment for future connections.

E. Verify location of proposed cleanouts. Whenever possible, cleanouts for new laterals on existing services shall be located directly in line with the existing lateral, without the use of bends upstream from the cleanout.

F. Verify alignment of lateral and location of service tap.

G. Notify Engineer of conflicts with other utilities, surface improvements, and trees.

3.2 PREPARATION

A. Correct over excavation with bedding material.

B. Remove large stones or other hard matter capable of damaging pipe or impeding consistent backfilling or compaction.

C. Protect and support existing sewer lines, utilities and appurtenances.

D. Maintain profiles of utilities. Coordinate with other utilities to eliminate interference. Notify Engineer where crossing conflicts occur.

3.3 BEDDING AND COVER

A. Excavate pipe trench in accordance with Section 31 23 33 - Trenching and Backfilling. Hand trim excavation for accurate placement of pipe to elevations indicated on Drawings.

B. Dewater excavations to maintain dry conditions and preserve final grades at bottom of excavation.

C. Provide sheeting and shoring in accordance with Section 31 23 33 - Trenching and Backfilling.

D. Place bedding material at trench bottom. Level material in one continuous layer not exceeding 6 inches compacted depth. Compact to 95 percent maximum density per ASTM D1557.

E. Backfill evenly around sides of pipe and to top of pipe with cover material. Place cover material to a minimum depth of one pipe diameter above utility but not less than 6 inches. Compact in maximum lifts of 12 inches to 95 percent maximum density per ASTM D1557. When placing cover around plastic pipe, limit maximum lift thickness of first lift to one half of pipe diameter.

F. Maintain optimum moisture content of bedding and cover materials to attain required compaction density.

3.4 INSTALLATION - PIPE

A. Install reinforced concrete pipe in accordance with ASTM C1479 and ACPA's "Concrete Pipe Installation Manual. Join piping with rubber compression gaskets.

B. Wrap pipe joints with a diameter of 24 inches or greater with geotextile blanket fabric. Use geotextile at least 22 inches wide, centered on joint.

C. Install plastic pipe, fittings, and accessories in accordance with ASTM D2321. Seal joints watertight.

D. Lay pipe to slope noted on Drawings. Begin at downstream end and progress upstream. Utilize laser to maintain line and grade.
   1. Tolerance: Plus or minus ¼ inch over 100 feet. Do not allow tolerances to accumulate.

E. Assemble and handle pipe in accordance with manufacturer's instructions.

F. Keep pipe and fittings clean until work is completed and accepted by Engineer. Cap open ends during periods of work stoppage.

G. Lay bell and spigot pipe with bells upstream.

H. Encase pipe in concrete and construct concrete cradle to support crossing utilities where directed by Engineer.

I. Install tracer wire continuous above top of pipe, buried 24 inches below finished grade. Coordinate placement with backfilling operations. Continue tracer wire up sides of manholes and terminate with locating clip beneath manhole cover. Provide separate locating clip for each pipe entering manhole; position clip above pipe entry.

3.5 INSTALLATION - TAPERED END SECTIONS

A. Install tapered end sections at all above grade storm sewer outlets and inlets.

B. Construct concrete footing to support tapered end section where specified.

C. Secure steel grate over end section.

D. Install riprap over geotextile liner as indicated on Drawings.

3.6 INSTALLATION - SERVICE TAPS

A. Core drill circular opening in reinforced concrete pipe after installation to permit connection of storm laterals. Using pneumatic hammers, chipping guns, or sledge hammers is not permitted.

B. Make taps radial to center of reinforced concrete pipe at an angle of 45 degrees above pipe centerline. Locate taps at least 5 feet apart and no closer than 18 inches to pipe joint.

C. Install resilient pipe connector per manufacturer's instructions. Insert storm lateral piping into resilient pipe connector and tighten stainless steel clamp.

3.7 INSTALLATION - STORM LATERALS

A. Construct laterals from service tap to cleanout.
   1. Use plastic pipe and fittings.
   2. Use only manufactured fittings to adjust for alignment of existing service pipe.
   3. Do not use 90 degree bends.
   4. Maintain minimum 3 foot depth of cover over pipe.

5. Maintain minimum 5 feet separation distance between adjacent laterals and other parallel service lines.
6. Install laterals at a minimum slope of 1.0%.

B. Install tracer wire continuous above top of lateral, buried 24 inches below finished grade. Coordinate placement with backfilling operations. Connect lateral tracer wire to storm main tracer wire with main to lateral connector. Continue tracer wire up side of cleanout and terminate with locating clip attached to cleanout cap adapter.

C. Construct cleanout as close to right of way as feasible without excavating on private property. Install cleanout cap 4 inches below finished grade in lawn areas. Install cleanout riser cover over cleanout cap for cleanouts located in driveways. Attach cleanout adapter to riser pipe using primer and solvent cement in accordance with ASTM D2855.

D. Install ball marker at cleanout. Attach to cleanout riser immediately below cleanout cap with plastic cable tie. Remove identification tag and attach to as-built drawings noting service address. Provide ball markers to Owner for programming two weeks prior to installation. Owner will program ball marker with size and type of service.

E. Construct laterals from cleanout to terminal point:
1. Do not install bends upstream from the cleanout without approval of Engineer.
2. Use only manufactured fittings to adjust for alignment of existing service.
3. Do not adjust for alignment at connection to existing service.
4. Connect new lateral pipe to existing service pipe with flexible coupling matching diameter of both pipe sizes.

F. At termination of laterals to empty lots, install watertight plug, braced to withstand pipeline test pressure thrust.

3.8 SEWER BULKHEADS

A. Construct solid wall of masonry or concrete inside abandoned sewer where specified.

B. Wall Thickness: Minimum 1/3 of pipe diameter and not less than 12 inches.

3.9 BACKFILLING

A. Measure and record the distance between all manholes, catch basins, service taps, fittings, and cleanouts prior to backfilling.

B. Backfill excavation in accordance with Section 31 23 33 - Trenching and Backfilling.

3.10 FIELD QUALITY CONTROL

A. Section 01 40 00 - Quality Requirements: Testing and Inspections by Owner.

B. Visually inspect pipe, fittings, and connections for leakage or infiltration prior to backfilling.

C. Geotechnical Tests:
   1. Provide Owner's representative with samples or access to stockpiles upon request.
   2. Owner's representative will perform laboratory testing of bedding and cover materials to determine gradation in accordance with ASTM C117 and ASTM C136.
   3. Owner's representative will perform testing of bedding and cover materials to determine maximum density in accordance with ASTM D1557 or Michigan Cone Test.
   4. Owner's representative will perform in place compaction tests of bedding and cover materials in accordance with the following:
      a. Density Tests: ASTM D2922.
      b. Moisture Tests: ASTM D3017.
   5. Frequency of Tests: At each compacted bedding and cover layer, one test for each 150 feet or less of trench length. Additional testing may be required at the discretion of the Engineer.

D. When tests indicate Work does not meet specified requirements, remove Work, replace and retest.

3.11 PROTECTION OF FINISHED WORK

A. Section 01 70 00 - Execution and Closeout Requirements: Protecting Installed Construction.

B. Protect pipe and cover from damage or displacement until backfilling operation is complete.
   1. Take care not to damage or displace installed pipe and joints during construction of pipe supports, backfilling, testing, and other operations.
   2. Repair or replace pipe that is damaged or displaced from construction operations.

3.12 STANDARD DRAWINGS

A. Storm Lateral

B. MDOT R-86 Series: Precast Concrete End Section for Pipe Culvert

C. MDOT R-92 Series: Steel Grates for End Sections

STORM LATERAL

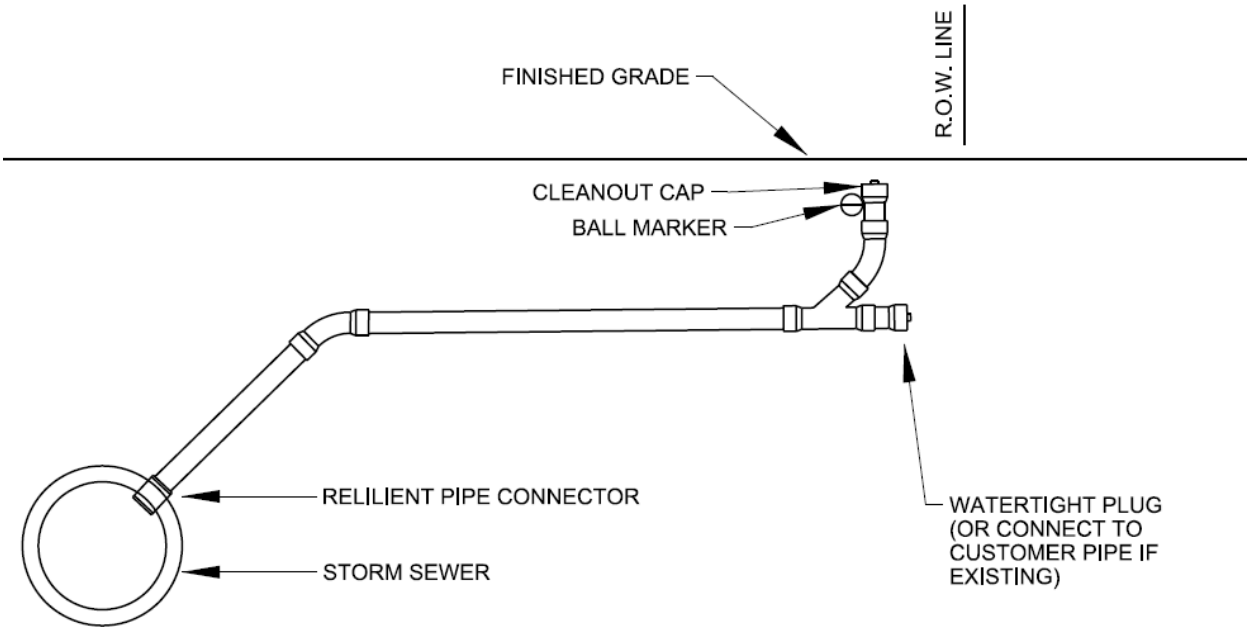

END OF SECTION

SECTION 33 46 16

SUBDRAINAGE PIPING

PART 1 GENERAL

1.1 SUMMARY

A. Section Includes:
   1. Perforated drainage pipe system for road subbase.

B. Related Sections:
   1. Section 31 23 33 - Trenching and Backfilling
   2. Section 33 05 13 - Public Manholes and Structures
   3. Section 33 41 13 - Public Storm Utility Drainage Piping

1.2 PRICE AND PAYMENT PROCEDURES - UNIT PRICES

A. Underdrain, Subbase, __ inch:
   1. Basis of Measurement: Foot
   2. Basis of Payment: Includes trenching, hand trimming excavation, pipe and fittings, bedding, backfill, and compaction.

B. Underdrain, Pipe, Open-Graded, __ inch
   1. Basis of Measurement: Foot
   2. Basis of Payment: Includes trenching, hand trimming excavation, pipe and fittings, geotextile blanket, bedding, backfill, and compaction.

1.3 REFERENCES

A. Abbreviations and Acronyms
   1. PE: Polyethylene

B. Reference Standards
   1. ASTM International:
      a. ASTM C117 - Standard Test Method for Materials Finer than 75-µm (No. 200) Sieve in Mineral Aggregates by Washing
      b. ASTM C136 - Standard Test Method for Sieve Analysis of Fine and Coarse Aggregates
      c. ASTM D1557 - Standard Test Methods for Laboratory Compaction Characteristics of Soil Using Modified Effort (56,000 ft-lbf/ft3)
      d. ASTM D2321 - Standard Practice for Underground Installation of Thermoplastic Pipe for Sewers and Other Gravity-Flow Applications
      e. ASTM D2922 - Standard Test Methods for Density of Soil and Soil-Aggregate in Place by Nuclear Methods (Shallow Depth)
      f. ASTM D3017 - Standard Test Method for Water Content of Soil and Rock in Place by Nuclear Methods (Shallow Depth)

g. ASTM F667 - Standard Specification for 3 through 24 in. Corrugated Polyethylene Pipe and Fittings

2. Michigan Department of Transportation (MDOT):
   a. MDOT 2012 Standard Specifications for Construction
   b. MDOT Density Testing and Inspection Manual, Current Edition

1.4 SUBMITTALS

A. Section 01 33 00 - Submittal Procedures: Requirements for submittals.

B. Product Data: Submit pertinent data for subdrainage pipe, fittings, and accessories.

C. Materials Source: Submit source location and names of material suppliers.

D. Manufacturer's Installation Instructions:
   1. Indicate special procedures required to install products specified.
   2. Submit detailed description of procedures for connecting.

E. Manufacturer's Certificate: Certify products meet or exceed specified requirements.

1.5 CLOSEOUT SUBMITTALS

A. Section 01 70 00 - Execution and Closeout Requirements: Project Record Documents.

B. Project Record Documents: Accurately record actual locations of pipe runs, connections, manholes, inlets, catch basins, and invert elevations.
   1. For all subdrains, record length of pipe run, invert elevations and slope.
   2. Identify and describe any alterations made due to subsoil conditions, discovery of uncharted utilities, or unanticipated conditions.

C. Test Reports: Submit reports indicating field tests made and results indicating conformance or non-conformance with specifications.

1.6 QUALITY ASSURANCE

A. Qualifications:
   1. Manufacturers: Company specializing in manufacturing products specified in this section.
   2. Installers: Company specializing in performing work of this section with minimum three years documented experience.

B. Preconstruction Testing:
   1. Section 01 40 00 - Quality Requirements: Testing and Inspections by Owner.
   2. Notify Engineer minimum two weeks prior to scheduled delivery of bedding and cover materials.
   3. Allow Owner’s representative access to bedding and cover materials source for sampling and testing.
   4. Confirm test results indicate conformance with specifications prior to delivery to site.

5. Owner reserves the right to collect and test additional samples of bedding and cover materials after delivery to site.

C. Single Source Responsibility: Furnish bedding and cover materials from single source throughout the Work.

1.7 DELIVERY, STORAGE, AND HANDLING

A. Section 01 60 00 - Product Requirements: Product Delivery Requirements and Product Storage and Handling Requirements.

B. During loading, transporting, and unloading of materials and products, exercise care to prevent any damage.

C. Do not place pipe or pipe materials on private property or in areas obstructing pedestrian or vehicle traffic.

D. Store UV sensitive materials out of direct sunlight.

PART 2 PRODUCTS

2.1 SUBDRAINAGE PIPE

A. Plastic Tubing: Annular corrugated, single wall perforated pipe conforming to ASTM F667.
   1. Geotextile Filter Sock: Tubing for subbase drains shall be wrapped with a knitted nylon geotextile sock capable of preventing intrusion of silt and sediment into tubing.
   2. Joints: Soil tight split band, eternal snap, or internal snap couplers. Use only internal snap couplers for tubing with geotextile filter sock.

2.2 ACCESSORIES

A. Geotextile Blanket: MDOT 2012 Standard Specifications for Construction 910.03.A.

2.3 BEDDING AND COVER MATERIALS

A. Pipe Bedding and Cover:
   1. Subbase Underdrain: MDOT 2012 Standard Specifications for Construction, Section 902.07.
      a. Class IIAA Granular Material per Table 902-3.
   2. Open-Graded Underdrain: MDOT 2012 Standard Specifications for Construction, Section 902.06.
      a. Class 34 R Open-Graded Aggregate per Tables 902-1 and 902-2.

B. Suitable on site material may be utilized as pipe bedding and cover with approval of Engineer.

PART 3 EXECUTION

3.1 EXAMINATION

A. Section 01 30 00 - Administrative Requirements: Verification of existing conditions before starting work.

B. Verify trench cut is ready to receive work and excavations, dimensions, and elevations are as indicated on Drawings. Notify Engineer of discrepancies.

3.2 PREPARATION

A. Correct over excavation with bedding material.

B. Remove large stones or other hard matter which could damage drainage piping or impeding consistent backfilling or compaction.

3.3 BEDDING AND COVER

A. Excavate pipe trench in accordance with Section 31 23 33 - Trenching and Backfilling. Hand trim excavation for accurate placement of pipe to elevations indicated on Drawings.

B. Place bedding material at trench bottom. Level material in one continuous layer not exceeding 6 inches compacted depth. Compact to 95 percent maximum density per ASTM D1557.

C. Backfill evenly around sides of pipe and to top of pipe with cover material. Place cover material to a minimum depth of one pipe diameter above utility but not less than 6 inches. Compact in maximum lifts of 12 inches to 95 percent maximum density per ASTM D1557. When placing cover around plastic pipe, limit maximum lift thickness of first lift to one half of pipe diameter.

D. Prior to installing open-graded underdrain, place geotextile blanket along bottom and sides of trench. Extend geotextile sufficient distance to completely encase bedding and cover materials. After placing bedding and cover, wrap geotextile blanket over top of cover material and overlap a minimum of 12 inches prior to placing backfill.

E. Maintain optimum moisture content of bedding and cover materials to attain required compaction density.

3.4 INSTALLATION – PIPE

A. Install plastic pipe, fittings, and accessories in accordance with ASTM D2321. Seal joints soil tight.

B. Lay pipe to match longitudinal slope of curb line but not less than minimal slope. Begin at downstream end and progress upstream.
   1. Curve pipe to maintain alignment. Do not use fittings.
   2. Maintain minimum of 2.5 foot depth of cover over pipe.

3. Install pipe at a minimum slope of 0.5%.
4. Connect to storm sewer system at manholes and catch basins.
5. Terminate upstream end of pipe with soil tight plastic cap.

C. Assemble and handle pipe in accordance with manufacturer's instructions.

D. Keep pipe and fittings clean until work is completed and accepted by Engineer. Cap open ends during periods of work stoppage.

3.5 BACKFILLING

A. Measure and record the distance between all manholes, catch basins, and fittings, prior to backfill.

B. Backfill excavation in accordance with Section 31 23 33 - Trenching and Backfilling.

3.6 FIELD QUALITY CONTROL

A. Section 01 40 00 - Quality Requirements: Testing and Inspections by Owner.

B. Visually inspect pipe, fittings, and connections prior to backfilling.

C. Geotechnical Tests:
1. Provide Owner's representative with samples or access to stockpiles upon request.
2. Owner's representative will perform laboratory testing of bedding and cover materials to determine gradation in accordance with ASTM C117 and ASTM C136.
3. Owner's representative will perform testing of bedding and cover materials to determine maximum density in accordance with ASTM D1557 or Michigan Cone Test.
4. Owner's representative will perform in place compaction tests of bedding and cover materials in accordance with the following:
   a. Density Tests: ASTM D2922.
   b. Moisture Tests: ASTM D3017.
5. Frequency of Tests: At each compacted bedding and cover layer, one test for each 150 feet or less of trench length. Additional testing may be required at the discretion of the Engineer.

D. When tests indicate Work does not meet specified requirements, remove Work, replace and retest.

3.7 PROTECTION OF FINISHED WORK

A. Section 01 70 00 - Execution and Closeout Requirements: Protecting Installed Construction.

B. Protect pipe and cover from damage or displacement until backfilling operation is complete.

1. Take care not to damage or displace installed pipe and joints during construction of pipe supports, backfilling, testing, and other operations.
2. Repair or replace pipe that is damaged or displaced from construction operations.

END OF SECTION

SECTION 34 71 13

VEHICLE BARRIERS

PART 1 GENERAL

1.1 SUMMARY

A. Section Includes:
1. Steel guide rail.
2. Wood posts.
3. Steel posts.
4. Excavating for post bases.

B. Related Sections:
1. Section 03 30 00 - Cast-In-Place Concrete: Concrete foundation for posts.
2. Section 31 23 16 - Excavation: Excavating for posts.
3. Section 31 23 23 - Fill: Backfilling and compacting fill surrounding posts.

1.2 UNIT PRICE - MEASUREMENT AND PAYMENT

A. Guardrail, Type __
1. Basis of Measurement: Foot
2. Basis of Payment: Includes the cost of providing and placing the rail, guardrail posts, blocks, miscellaneous hardware.

B. Guardrail, Backed, Det __
1. Basis of Measurement: Each
2. Basis of Payment: Includes the cost of providing beam elements, hardware, posts, and spacer blocks necessary to construct the span as defined.

C. Guardrail Approach Terminal, Type __
1. Basis of Measurement: Each
2. Basis of Payment: Includes the cost of all standard elements and hardware required for installation, including obstacle marker panels and terminal end shoes.

D. Guardrail Departing Terminal, Type __
1. Basis of Measurement: Each
2. Basis of Payment: Includes the cost of all standard elements and hardware required for installation, including obstacle marker panels and terminal end shoes.

E. Guardrail Reflector
1. Basis of Measurement: Each
2. Basis of Payment: Includes the cost of furnishing and installing guardrail reflectors on guardrail sections at the spacing and orientation defined herein.

1.3 REFERENCES

A. American Association of State Highway and Transportation Officials:
   1. AASHTO M180 - Standard Specification for Corrugated Sheet Steel Beams for Highway Guardrail.

B. ASTM International:
   1. ASTM A36/A36M - Standard Specification for Carbon Structural Steel.
   2. ASTM A123/A123M - Standard Specification for Zinc (Hot-Dip Galvanized) Coatings on Iron and Steel Products.
   3. ASTM A153/A153M - Standard Specification for Zinc Coating (Hot-Dip) on Iron and Steel Hardware.
   4. ASTM A428/A428M - Standard Test Method for Weight [Mass] of Coating on Aluminum-Coated Iron or Steel Articles.
   5. ASTM A500/A500M - Standard Specification for Cold-Formed Welded and Seamless Carbon Steel Structural Tubing in Rounds and Shapes.
   6. ASTM A501 - Standard Specification for Hot-Formed Welded and Seamless Carbon Steel Structural Tubing.
   7. ASTM C94/C94M - Standard Specification for Ready-Mixed Concrete.

C. American Wood-Preservers' Association:
   1. AWPA C14 - Wood for Highway Construction - Preservative Treatment by Pressure Processes.

D. Michigan Department of Transportation (MDOT)
   1. MDOT 2012 Standard Specifications for Construction
   2. MDOT Road & Bridge Standard Plans

1.4 SYSTEM DESCRIPTION

A. Guardrail items shall be constructed in accordance to MDOT Standard Specifications Section 807 and MDOT Road & Bridge Standard Plans R-56-E through R-71-B.

1.5 SUBMITTALS

A. Section 01 33 00 - Submittal Procedures: Requirements for submittals.

B. Shop Drawings: Indicate plan layout, spacing of components, post foundation dimensions, anchorage, and schedule of components.

C. Product Data: Submit data on rail, posts, accessories, hardware and structural capabilities of rail section.

D. Manufacturer's Certificate: Certify materials meet or exceed specified requirements.

1.6 QUALITY ASSURANCE

A. Perform Work in accordance with MDOT Standards and Specifications.

1.7 FIELD MEASUREMENTS

A. Verify field measurements are as indicated on shop drawings.

PART 2 PRODUCTS

2.1 MANUFACTURERS

A. Furnish materials in accordance with MDOT Standards and Specifications.

2.2 MATERIALS

A. Guide Rail Beam: AASHTO M180 Class A Type 2 in required shape; rolled steel sections, die punched bolt holes for site assembly and attachment to posts, formed steel terminating sections.

B. Steel Posts: ASTM A36/A36M structural steel sections, W6 x 9 sections as shown in standard plans.

2.3 ACCESSORIES

A. Concrete: Type specified in Section 03 30 00 Cast-In-Place Concrete

2.4 FINISHES

A. Galvanizing: ASTM A123/A123M; hot dip galvanize after fabrication.

PART 3 EXECUTION

3.1 EXAMINATION

A. Section 01 30 00 - Administrative Requirements: Verification of existing conditions before starting work.

B. Verify location of underground utilities and adjust location of posts to avoid damaging utilities.

3.2 INSTALLATION

A. Guardrail items shall be constructed in accordance to MDOT Standard Specifications Section 807 and MDOT Road & Bridge Standard Plans R-56-E through R-71-B.

END OF SECTION

MICHIGAN
DEPARTMENT OF TRANSPORTATION

SUPPLEMENTAL SPECIFICATION
FOR
ERRATA TO THE 2012 STANDARD SPECIFICATIONS

Page	Subsection	Errata
3	101.02	Modify the abbreviation reading “AIS” to read “AISI”.
4	101.02	Delete the following abbreviations and the long forms MDELEG MDNRE Add the following abbreviations and the long forms MDNR Michigan Department of Natural Resources MDEQ Michigan Department of Environmental Quality MDLARA Michigan Department of Licensing and Regulatory Affairs NESC National Electrical Safety Code
27	103.02.B.2	Change the last sentence of the first paragraph to read "For decreases below 75 percent, the maximum allowable payment for work performed, including any adjustment, will not exceed an amount equal to 75 percent of the original contract quantity times the contract unit price."
34	104.05	The first sentence of this subsection should read "If the Contractor performs unauthorized work (work performed without the inspections required by the contract, extra work performed without Department approval, work performed contrary to the inspectors direction, or work performed while under suspension by the inspector), the Engineer may reject the unauthorized work."
46	104.12	Add the following to the end of the first paragraph "The use of right-of-way in wetlands and floodplains, or the crossing of water courses by construction equipment is prohibited."
53	105.09	Add the following to the end of the second paragraph "Any specifically produced material not purchased by the Department, will remain the Contractors and must be removed from the project prior to final acceptance."
56	107.02.B.2	This sentence should read "U.S.Army Corps of Engineers' Section 404, Dredge and Fill; and Section 10, Navigable Waterway."
56	107.02.B	Add the subsection reading as follows: “3. U.S. Coast Guard Section 9, Navigable Waterway.” Change "MDNRE" to "MDEQ" in this subsection.

Page	Subsection	Errata
64	107.12	Change the first sentence of the first paragraph to read: "For protection of underground utilities and in accordance with 2013 PA 174, the Contractor must notify Miss Dig at least 3 work days, excluding Saturdays, Sundays and holidays, before beginning each excavation in areas where public utilities have not been previously located."
65	107.15.A	Change "MDNRE" to "MDEQ" in four instances in this subsection.
66	107.15.A.3	Add the following to the end of the paragraph "Note that a burn permit from the MDNR is required for any open burning whenever the ground is not snow covered. Any individuals that allow a fire to escape will be in violation of the Natural Resources and Environmental Protection Act and will be required to reimburse the costs of suppressing the wild fire."
67*	107.16	The third sentence should read "In State Forests, the Contractor must contact the local Unit Manager, Forest Management Division, MDNR, regarding the work to be performed within or adjacent to the forest land." Delete the last sentence of the first paragraph of this subsection.
83	108.10.C.1	In Table 108-1 delete the last row of the table and replace it with the following: ≥50,000,000 4,500
107	150.04	Change the following pay item reading "Mobilization, Max __" to read "Mobilization, Max (dollar)" at nine locations throughout the subsection.
112	201.03.A.3.b	Change "MDNRE" to "MDNR" in three instances in this subsection.
150	208.01	Change "MDNRE" to "MDEQ" in this subsection.
180	308.03.A	Change the first sentence of the second paragraph to read: "Do not operate equipment required to place backfill directly on geotextile products."
185	401.03.A	Change the first sentence of the second paragraph to read: Where unstable soil conditions, or obstructions other than rock, require excavation of the trench below the elevation detailed on the plans; undercut, backfill, and compact the trench as directed by the Engineer.
188	401.03.H	Change the second sentence of the paragraph to read "Jack steel pipes in place in accordance with subsection 401.03.G".
189	401.03.N	Add the following sentence to the end of the first paragraph "Where possible, maintain the stream flow thru a temporary channel or temporary culvert."

Page	Subsection	Errata
		The second sentence of the second paragraph should read "Direct water from the dewatering operations through a filter bag before discharging to an existing drainage facility."
190	401.04	Change the fourth pay item from the end of the list to read as follows: "Steel Casing Pipe, __ inch, Tr Det __."
200	402.04	Change the third pay item from the top of the list to read as follows: "Sewer, Cl __, __ inch, Jacked in Place"
201*	402.04.H	Change the last sentence of the first paragraph to read "The Department will not make an adjustment in the pay items of **Minor Traf Devices** or **Traf Regulator Control**."
208	403.04.D.3	Change the sentence to read: "Removing and replacing pavement adjacent to the adjusted cover per Standard Plan R-37 Series."
218	406.03.A.2	Change the first sentence of the first paragraph to read: "Design precast box culverts less than 10 feet in span length measured along the centerline of the roadway in accordance with current AASHTO LRFD Bridge Design Specifications and ASTM C 1577." Add the following sentence to the end of the first paragraph: "Design precast box culverts greater than or equal to 10 feet in span length measured along the centerline of the roadway for HL-93 Modified live load."
219	406.03.B	Change the first sentence of the first paragraph to read: "Submit shop drawings for culverts greater than or equal to 10 feet in span length measured along the centerline of the roadway to the Engineer, for review and approval in accordance with subsection 104.02."
219	406.03.C.1	Change the second sentence of the first paragraph to read: "Before manufacture, perform load ratings on precast three-sided, arch or box culverts greater than or equal to 10 feet in span length measured along the centerline of the roadway, in accordance with the AASHTO Manual of Bridge Evaluation, Section 6, Part A, the Michigan Bridge Analysis Guide current at the time load rating is performed, and the Michigan Structure Inventory and Appraisal Guide."
223	406.03.G	Add the following after the first sentence of the second paragraph: "Where possible, maintain the stream flow thru the existing channel, temporary channel, or temporary culvert."
224	406.03.G	Replace the fifth paragraph of this subsection with the following: "The Contractor may use cast-in-place wing walls, headwalls, and aprons, as alternatives to precast wing walls, headwalls, and aprons.

Page	Subsection	Errata
		Attach cast-in-place wing walls or headwalls as shown on the shop drawings."
225	406.03.G.2	Change the third sentence of the first paragraph to read: "Before placing the open-graded aggregate 34R, compact the coarse aggregate 6A using at least three passes of a vibrating plate compactor."
226	406.03.G.2	Change the first sentence of the second paragraph of this subsection to read: "Fill the space between the box culvert joints during placement of box sections with closed-cell rubber extrusion type gaskets in accordance with ASTM C 990."
226	406.04.A.9	Change the sentence to read: "Providing plan modifications including design, additional plan quantities and pay items to accommodate any changes to the precast units as shown on the plans."
226*	406.04.A	Add the following paragraph after the last paragraph of the subsection: "The substructure design is specific to the three-sided or arch culvert detailed on the plans. The Contractor must use approved MDOT service vendors qualified in Hydraulics, Geotechnical Engineering Services, and Short and Medium Span Bridges to perform the required design and plan modifications, as directed by the Engineer, if the Contractor selects a culvert shape different than shown on the plans."
227	406.04.B	Add the following new item in the list of items in this subsection: 2. Headwalls, wingwalls, aprons, and curtain walls, precast or cast-in-place; Renumber the exist items 2 through 4 in this list to read 3 through 5. Delete existing item numbered 5 and replace with the following: 6. Inserts for bars and connection hardware; and Renumber the existing item 6 in this list to read 7.
227	406.04.B	Delete the first and second paragraphs following the list of items in this subsection and replace with the following: "The Department will pay separately for cast-in-place concrete, other than for culvert segments, wing walls, and headwalls; excavation; protective coating; providing and placing backfill material; by plan quantity in accordance with subsection 109.01.A."
239	501.03.C.6	The first sentence of this subsection should read "Except as specified in subsection 501.03.C.4, removing HMA surface applies to removing HMA overlying a material designated for removal or that is required to remain in place."

Page	Subsection	Errata
247	501.03.O	Change footnote e in Table 501-5 to read: "Flushing severe enough to significantly affect surface friction (Friction Number <35)."
249	501.04.H	The first sentence of this subsection should read "The Engineer will measure, and the Department will pay for removing HMA surface, no greater than 12 inches thick, overlying a material designated for removal or that is required to remain in place, as **HMA Surface, Rem**." The second paragraph of this subsection should read "The Engineer will measure, and the Department will pay for removing HMA surface, greater than 12 inches thick, overlying a material designated for removal or that is required to remain in place, as **Pavt, Rem** in accordance with subsection 204.04."
257	503.03.E	Delete this subsection in its entirety.
265	504.03.E.3	Delete this subsection in its entirety.
269	504.04.A	This subsection should read "The unit prices for **Micro-Surface**, regardless of the type required, include cleaning existing pavement; applying a bond coat; temporary pavement markings; stationing; corrective action; and traffic control to complete corrective action."
299	601.04	In table 601-2 delete the row for Grade P-NC concrete in its entirety.
300	601.04	In table 601-2, the first sentence of footnote b. should read: “Use coarse aggregate 6A, 6AA or 6AAA for Grades P1, P2 and M.” In table 601-2, footnote c. should read: “The mix design basis for bulk volume (dry, loose) of course aggregate per unit volume of concrete is 72% for Grade P1; 74% for Grade P2.”
308	602.03.F	Note c. in Table 602-1 should read "Refer to Section D6 of the Materials Quality Assurance Procedures Manual for inspection procedure."
320	602.04.C.3	The last paragraph in this subsection should read "If the Engineer approves a substitution of a higher concrete grade for a lesser grade (e.g., P1 for P2), the Department will pay for the higher grade of concrete using the original bid and pay items of the lesser grade."
327	603.02	Change the second material in the list to read: “Concrete, Grade P-NC……..….603” Change the third material in the list to read: “Base Course Aggregate, 4G, 21AA, 22A…….902”
334	603.03.B.10	Change the last sentence of the second paragraph to read "Apply the required curing compound in two coats, at a rate of at least 1 gallon per 25 square yards for each coat."

Page	Subsection	Errata
342	603.04.G.3	Change "D1" to "W" in two instances in this subsection.
351	701.04	Replace Tables 701-1A and 701-1B with the Table 701-1 below.
372	705.03.C.1	Add the following sentence after the first paragraph of this subsection: “Do not drive piles within a radius of 25 feet of newly placed concrete until the concrete attains at least 75 percent of its specified minimum strength.”
374	705.03.C.2.c	Change the last sentence of the second paragraph to read “Drive test piles to the minimum pile length or practical refusal, whichever is greater”.
379	705.04	Change the fifth item down the list to read: “Pile, Galv (Structure No.)”
380	705.04	Change the last item in the list to read: “Pile Driving Equipment, Furn (Structure No.)”
383	706.02	The fourth paragraph following the list of materials should read "Provide AASHTO M 270, Grade 36 steel, meeting the requirements of ASTM A 786, galvanized in accordance with section 707, for expansion joint cover plates. Provide plates at least 3/8 inch thick. Use plates with a slip resistance equal to or greater than those meeting the requirements of ASTM A 786 and must be approved by the Engineer. Provide ASTM F 593 (Type 304) stainless steel, 3/4-inch or 1/2-inch diameter, flathead countersunk screws with 3/4-inch or 1/2-inch diameter inserts for use in expansion joint cover plates."
389	706.03.D.4.b	Change the first sentence of the fourth paragraph to read "Design forms, form supports, and attachments to carry dead loads, and resultant horizontal loads due to forming of cantilever overhangs."
391	706.03.E.8	Change the first sentence of the second paragraph of this subsection to read: "Patch sawed or sheared ends and visible defects in accordance with ASTM A 775."
392	706.03.E.8	Change the last sentence of the third paragraph of this subsection to read: "Coat mechanical splices after splice installation in accordance with ASTM A 775 for patching damaged epoxy coating."
394	706.03.H.1	Delete the last paragraph on page 394 and replace it with the following: “Do not cast sidewalk, curb, or barrier pours until the deck concrete attains at least the minimum specified 7-day flexural or compressive strength, and after completion of the 7-day continuous wet cure. The forming of succeeding portions may occur, provided the wet cure is maintained.”

Page	Subsection	Errata
406*	706.03.N.1.b	Add the following to the end of the last paragraph of the subsection: “Do not discontinue wet cure nor cast succeeding portions onto the bridge deck prior to completion of the 7-day two-phase continuous wet cure. Ensure excess or ponding cure water is removed prior to casting of succeeding structure portions.”
414	707.01.B	Change the last sentence of the first paragraph to read "For horizontally curved or continuous span or cantilevered span girders the Engineer will consider intermediate cross frames and connection plates and stiffeners as primary members."
416	707.03.C.1	Change the title of the subsection from “Shop Plans to read “Shop Drawings”. Change the second sentence of this subsection to read: “Do not use design drawings in lieu of shop drawings.”
426	707.03.C.17	Change the second sentence in the first paragraph of this subsection to read: "Tap oversized galvanized nuts in accordance with ASTM A 563 or AASHTO M 292 and meet Supplementary Requirement S1 of ASTM A 563 or AASHTO M 292."
430	707.03.D.7.b	Delete the first sentence of the last paragraph of this subsection.
430*	707.03.D.7.b	Change the title of the Table 707-4 to read: "Minimum Bolt Tension for ASTM A 325 Bolts"
430	707.03.D.7.b	Change "104,000" to "103,000" in the last row under the column titled Minimum Bolt Tension.
431	707.03.D.7.c	Add the following sentence to the end of the first paragraph of this subsection: “If using impact wrenches, provide wrenches sufficient to tighten each bolt in approximately 10 seconds.”
431*	707.03.D.7.c	Change the first sentence of the second paragraph to read: "Do not reuse ASTM A 325 bolts and nuts."
434	707.04.A	Change the first sentence of the first paragraph of this subsection to read: “The Engineer will measure structural steel by the calculated weight of metal in the finished structure, excluding filler metal in welding, as shown on the shop drawings or working drawings.”
438	708.03.A.2	Change the title of the subsection from “Shop Plans to read “Shop Drawings”.

Page	Subsection	Errata
		Change the first sentence to read: "Submit shop drawings in accordance with subsection 104.02." Change the fourth sentence to read: "Do not start production until the Engineer approves the shop drawings."
441*	708.03.A.11	Change the last sentence of the first paragraph to read "Cure concrete at temperatures from 70 °F to 150 °F until concrete attains the release strength shown on the shop drawings".
441	708.03.A.11	Change the fourth sentence of the fourth paragraph to read "Do not exceed a maximum concrete temperature of 150 °F during the curing cycle."
458	711.03.A	Change the first sentence in the first paragraph to read: "Shop drawings for structural steel and pipe railings are not required."
460	711.04.A	Change the second sentence of the first paragraph to read: "The unit price for **Bridge Barrier Railing** includes the cost of placing steel reinforcement, providing and placing concrete, constructing joints, and forming, finishing, curing and protecting the concrete."
461	711.04.F	The title of this subsection should read "**Reflective Marker, Permanent Barrier.**"
467	712.03.C	Add the following to the end of the third paragraph of the subsection: "Notify the Engineer of any saw cuts in the top flange. Saw cuts equal to or less than 1/32 inch deep in steel beams must be repaired by grinding, to a surface roughness no greater than 125 micro-inches per inch rms, and tapering to the original surface using a 1:10 slope. Saw cuts in excess of 1/32 inch deep in steel beams require a welded repair to be submitted to the Engineer for approval. Weld in accordance with subsection 707.03.D.8 and provide adequate notice to allow the Engineer to witness the repair work. Inspect and test all saw cut repairs (including grinding repairs) using ultrasonic testing in accordance with 707.03.D.8.c at no additional cost to the Department."
471	712.03.J	Add the following to the end of the second paragraph of the subsection: "Select adhesive anchor systems from the Qualified Products List."
471	712.03.J.1	Delete the first paragraph in this subsection and replace it with the following: "Propose complete details of drilling, cleaning, and bonding systems for anchoring reinforcement and submit for the Engineer's approval before use. The minimum embedment depth must be nine times the anchor diameter for threaded rod or bolt and twelve times the anchor diameter for reinforcing bar. Propose a drilling method that does not cut or damage existing reinforcing steel. Prepare at least three proof tests per anchor diameter and type in the same orientation in which they will be installed on the existing structure, on a separate concrete block, in the presence of the Engineer. The Engineer will proof test the

Page	Subsection	Errata
		proposed systems. The Engineer will base approval of the anchoring system on the following criteria:”
471	712.03.J.2	Change the third sentence of the first paragraph to read: “Use a tension testing device for unconfined testing, in accordance with ASTM E 488.”
473	712.03.L.2	Change the first sentence in the second paragraph of this subsection to read: "If using epoxy coated steel reinforcement, epoxy coat mechanical reinforcement splices in accordance with ASTM A 775."
473	712.03.L.3	Delete the existing first sentence in the first paragraph.
473	712.03.L.3	Change the third sentence of the first paragraph to read "Provide two test splices on the largest bar size."
473*	712.03.L.3	Change the sentence beginning “Demonstrate to the…. to read: “Demonstrate to the Engineer that splices have a tensile strength of 125 percent of the bar yield strength and high strength splices have a tensile strength of 150 percent of the bar yield strength.”
488	713.02	Add the following as subsection 713.02.C: "C. **Structural Steel for Retrofitting and Welded Repairs.** Structural steel material used for retrofitting and welded repairs of primary members as defined in subsection 707.01.B must meet longitudinal Charpy V-Notch impact test requirements."
501	715.02	Add the following material reference above the two existing items: “Sealant for Perimeter of Beam Plates.....713”
508	715.03.D.1	Add the following sentence after the second paragraph of the subsection: “Apply sealant for perimeter of beam plates in accordance with subsection 713.03.F.”
515	716.03.A	Delete the second paragraph of this subsection in its entirety. Change the last sentence of the last paragraph of this subsection to read: “Provide a primer dry film thickness for the top flange between 4 mils and 10 mils.”
519	716.04	Change the second sentence of the first paragraph of this subsection to read: "The unit price for **Field Repair of Damaged Coating (Structure No.)** includes the costs of making field repairs to the shop applied coating system; prime coat surfaces and exposed surfaces of bolts, nuts, and washers; and repairing stenciling."

Page	Subsection	Errata
521	717.04.B	This subsection should read "The unit price for **Drain Casting Assembly** includes the cost of providing and installing the downspout and, if necessary, the lower bracket to the drain casting."
522	718.02	Change the section number "906" in the third material in the list to read "919."
533	718.04	Delete the following pay item from the list: Temp Casing…….Foot
533	718.04.B.2	Delete this subsection in its entirety.
533	718.04.B.3	Renumber this subsection as follows: “2. **Permanent Casing.”**
540	802.04	Change "Non reinf" in the last pay item of the list with "Nonreinf".
545*	803.04.E	Change the second sentence of the second paragraph to read: “The unit price for **Railing for Steps** includes the cost of providing, fabricating, installing, and grouting the railing.”
560	807.04	Delete the following pay item from the list: Guardrail Buffered End .....Each
560	807.04.B	Change the fifth paragraph of this subsection to read: “The Engineer will measure **Guardrail Salv** and **Guardrail, Mult, Salv** along the face of the rail (one face for multiple beams), including terminals and end shoes.”
567	808.04.C	Change the first paragraph of this subsection to read: "The Department will not pay separately for protective fence required in accordance with subsection 104.07."
569	809.04.A	Change the first sentence to read: “The unit price for **Field Office, Cl** __ includes the cost of setup, providing access, grading, maintaining, plowing snow, and utility hook-up charges.”
570	809.04.B	Delete the existing second and third sentences in the first paragraph and replace them with the following: “The unit price for **Field Office, Utility Fees** includes the cost of monthly usage fees for electricity, gas, telephone service and charges, fuel for the stove, monthly water and sanitary service.”
570	809.04.B	Change the existing fourth sentence in the first paragraph to read: “The Department will reimburse the Contractor for monthly usage fees for electricity, gas, telephone, water and sanitary charges incurred by the Department.”
575	810.03.K	Change the subsection to read

Page	Subsection	Errata
		"K. **Drilled Piles for Cantilever and Truss Foundations.** Construct drilled piles for cantilever and truss foundations in accordance with section 718."
578	810.03.N.2	Add the following sentence after the first sentence of the second paragraph on this page: "Mark each nut and bolt to reference the required rotation."
584	810.04	Delete the last pay item in the list: Truss Fdn Anchor Bolts, Replace…….Each
596	811.03.G	Delete this subsection in its entirety.
597*	811.03.H	Rename this subsection as follows: "G. **Raised Pavement Marker (RPM) Removal."**
597*	811.04	Change "Crosshatching" in the last pay item of the list on this page to "Cross Hatching".
598*	811.04	Delete the following pay items from the list: Pavt Mrkg, (material), 4 inch, SRSM, (color)……Foot Pavt Mrkg, (material), 4 inch, SRSM, 2nd Application, (color)……Foot Add the following pay items to the list: "Pavt Mrkg, Polyurea, (legend)……..Each Pavt Mrkg, Polyurea, (symbol)……..Each" Change the sixth item down the list to read: "Pavt Mrkg, Polyurea, __ inch, Cross Hatching, (color)" Change the eleventh item down the list to read: "Rem Curing Compound, for Longit Mrkg, __ inch……Foot" Change the last item in the list to read: "Witness, Log, Layout, $1000.00"
599	811.04.B	Delete this subsection in its entirety.
599	811.04	Rename the following subsections as follows: "B. **Call Back.** C. **Pavement Marking Removal.** D. **Material Deficiency."**
602	812.03.D	Change the first sentence to read "Provide and maintain traffic control devices meeting the requirements in the ATSSA Quality Guidelines for Work Zone Traffic Control Devices and Features."
603	812.03.D.1	The last sentence on this page should read "Lay the sign behind the guardrail, with the uprights pointing downstream from the traffic, and place the support stands and ballasts close to the guardrail."

An asterisk (*) indicates an entry which has been revised from an earlier version of this Supplemental Specification.

Page	Subsection	Errata
604	812.03.D.2	The first sentence of the fourth paragraph should read "Do not use burlap or similar material to cover Department or Local Government owned signs."
604	812.03.D.5	The fifth sentence of the first paragraph should read "Do not mix drums and cones within a traffic channeling sequence."
605	812.03.D.6.b	Change the first sentence of the first paragraph to read: “The Department will allow the nighttime use of 42-inch channelizing devices, in the tangent area only, on CPM and pavement marking of any duration where the use of plastic drums restricts proposed lane widths to less than 11 feet, including shy distance.”
605	812.03.D.7	Add the following sentence after the first sentence of the first paragraph: “Place a shoulder closure taper in advance of the lighted arrows placed on the shoulders.”
607	812.03.D.9	Delete the second paragraph of this subsection and replace with the following: “Link sections together to fully engage the connection between sections. Maintain the barrier with end-attachments engaged and within 2 inches of the alignment shown on the plans.”
608	812.03.D.10.b	Add the following sentence after the first paragraph of this subsection: “Use an NCHRP 350, Test Level 3, or MASH accepted attenuation system.”
608	812.03.D.10.b	Delete the second sentence of the second paragraph of this subsection beginning with "Install sand module attenuators…"
608	812.03.D.10.b	Add the following sentence after the second paragraph of this subsection: “Install impact attenuation devices as shown on the plans, as directed by the Engineer, or both.”
609	812.03.D.10.d	Add the following sentence after the first paragraph of this subsection: “Use an NCHRP 350, Test Level 3, or MASH accepted attenuation system.”
610	812.03.D.11.a	Change "Type R tape" to read "Type R marking" in three locations in this subsection.
613	812.03.D.14.a.iii	Change the sentence in this subsection to read "Place an ET Type or SKT Type extruder guardrail ending on both blunt guardrail ends."
615	812.03.F	The second sentence of the second paragraph of this subsection should read: "The Contractor may use a Type R temporary pavement marking cover, per subsection 812.03.D.12 when authorized by the Engineer."

Page	Subsection	Errata
616	812.03.F.2	The last sentence of the first paragraph should read: "If the removal equipment cannot collect all removal debris, operate a self-propelled sweeper capable of continuously vacuuming up the removal debris immediately behind the removal equipment."
617	812.03.G.3	The first sentence of the second paragraph should read: "Sweep the shoulder and remove debris prior to placing traffic on the shoulder and throughout the time the shoulder is used to maintain traffic."
617	812.03.G.4.a	Delete "48 inch by 48 inch" from the first sentence of this subsection.
618*	812.03.G.7	The first sentence of the first paragraph should read: "Clean barrier reflectors, plastic drums, 42 inch channelizing devices, tubular markers, signs, barricades, and attached lights in operation on the project to ensure they meet required luminosity."
619	812.03.G.8	The second sentence of the third paragraph from the end of the subsection should read: "Illuminate traffic regulator stations at night per subsection 812.03.H."
621	812.03.I.6	Delete "48 inch by 48 inch" from the second sentence of this subsection.
622*	812.03.J	The second paragraph should read "Apply one 2-inch wide horizontal stripe of red and white conspicuity tape along at least 50 percent of each side of, and across the full width of the rear of the vehicle or equipment."
622	812.04	Change the second item down the list to read: "Traf Regulator Control" Change the sixth item down the list to read: "Sign Cover, Type I"
626	812.04.I	Change the reference "812.04.E" in the first sentence to "812.04.D".
628	812.04.M.4	Add the following as the first sentence of this subsection: "The Engineer will not measure a temporary barrier ending move as **Conc Barrier Ending, Temp, Relocated** if it involves work defined in subsection 812.04.M.3."
629	812.04.N.1	Change the reference "811.04.D" in the second paragraph of this subsection to read "811.04.C".
630	812.04.S	Change the first sentence to read: "The Department will not make additional payments for traffic regulating, signing, arrow boards, and lighting systems for traffic regulator stations operated at night due to a temporary PTS system failure."
634	813.03.C.3	Change the reference "903.07.A" in the paragraph of this subsection to read "907.07.B".

Page	Subsection	Errata
646	815.04	Change the first, third and fourth pay items in the list to read: “Site Preparation, Max (dollar) ..... Lump Sum Watering and Cultivating, First Season, Min (dollar)..... Lump Sum Watering and Cultivating, Second Season, Min (dollar) ..... Lump Sum”
646	815.04.C.1	Change the following pay item reading: “Watering and Cultivating, First Season, Min. (dollar)” to read “Watering and Cultivating, First Season, Min (dollar)” at two locations throughout the subsection.
646	815.04.C.1.b	Delete this subsection in its entirety.
646	815.04.C.1.c	Rename this subsection to read: “b. Removal and disposal of unacceptable plants.”
646	815.04.C.2	Change the following pay item reading: “Watering and Cultivating, Second Season, Min. (dollar)” to read “Watering and Cultivating, Second Season, Min (dollar)” at three locations throughout the subsection.
647	815.04.C.2	Change the last paragraph of this subsection to read: “For each unacceptable plant identified, the Engineer will calculate a 50 percent reduction in the unit price for the relevant **(Botanical Name)** pay item, and will process a negative assessment for each unacceptable plant for that amount.”
650	816.03.B	Delete the first paragraph of this subsection and replace with the following: "Conduct soil tests when called for in the contract or when directed by the Engineer. Provide soils tests results to the Engineer when testing is required. Provide and place fertilizer as indicated below and as indicated in the soils tests, if required."
650	816.03.B.1	Change the sentence to read: "For Class A fertilizer, evenly apply 176 pounds of chemical fertilizer nutrient per acre on a prepared seed bed."
650	816.03.B.2	Change the sentence to read: "For Class B fertilizer, evenly apply 120 pounds of chemical fertilizer nutrient per acre on a prepared seed bed."
650*	816.03.B.3	Change the sentence to read: "For Class C fertilizer, evenly apply 80 pounds of chemical fertilizer nutrient per acre on established turf."
663*	819.01	Delete the first paragraph in the subsection and replace it with the following: “This work consists of providing operating electrical and lighting units; removing, salvaging, or disposing of existing electrical and lighting components; excavating, backfilling, restoring the site in accordance with section 816; and disposing of waste excavated materials. Complete this work in accordance with this section, section 820, and the contract and to the requirements of the NEC, the National Electrical

Page	Subsection	Errata
		Safety Code, and the MDLARA for those items not identified in the contract." Change the third sentence of the second paragraph in this subsection to read: "Contact the MDLARA for electrical service inspection and pay the applicable fees."
671	819.03.F.1	Change the paragraph to read: "Install light standard foundations as shown on the plans and the standard plans, as applicable."
673	819.03.G.4.b	Change the last sentence of the first paragraph to read: "Tighten the anchor bolts to a snug tight condition as described in the third paragraph of subsection 810.03.N.2 ensuring the lock washer is completely compressed."
673	819.03.G.4.b	Delete the first two sentences of the second paragraph and replace with the following: "Tighten bolts connecting the pole to the frangible base to a snug tight condition. Snug tight is the tightness attained by a few impacts of an impact wrench, or the full effort of a person using an ordinary spud wrench. The lock washers must be fully compressed."
678*	819.04	Delete the last item in the list on this page reading: "DB Cable, in Conduit, 600 Volt, (number) 1/C# (size) ..... Foot"
680	819.04	Change the first paragraph to read: "Unless otherwise required, the unit prices for the pay items listed in this subsection include the cost of excavation, granular material, backfill, and disposal of waste excavated material. If the contract does not include pay items for restoring the site in kind in accordance with section 816, the Department will consider the cost of restoration included in the pay items listed in this subsection."
680	819.04.A	Add the following paragraph after the first paragraph of the subsection. "The unit prices for **Conduit, Rem** include the cost of removing the type, number, and size of conduit shown on the plans." Change the third paragraph of the subsection to read: "The unit prices for **Conduit, (type), __ inch** and **Conduit, DB, (number), __ inch** include the cost of installing the type, number, and size of conduit shown on the plans, and installing marking tape."
681	819.04.B	Change the last paragraph of the subsection to read: "The unit price for **DB Cable, in Conduit, Rem** includes the cost of removing all cables from the existing conduit measured per lineal foot of conduit."
681	819.04.C	Change the first paragraph of the subsection to read:

Page	Subsection	Errata
		"The unit prices for **Cable, Rem** and **Cable, (type), Rem** include the cost of dead ending, circuit cutting, installing guying, work required to leave circuits operable, and disposing of the removed cables, wire, hardware, and other appurtenances."
681	819.04.D	Change the first paragraph of the subsection to read: "The unit price for **Cable, Pole, (type), Disman** includes the cost of dismantling and off-site disposal of the following:"
685	820.01.D	Change the sentence to read: "Excavate, backfill, restore the site in kind in accordance with section 816, and dispose of excess or unsuitable material;"
688	820.03.C	Change the seventh paragraph of this subsection to read: "Tighten top anchor bolt nuts, snug, in accordance with the first four paragraphs of subsection 810.03.N.2, except beeswax will not be required."
696	820.04	Add the following pay items to the list: "Pedestal, Pushbutton, Alum……Each Pedestal, Pushbutton, Rem……Each"
697	820.04.A.2	Change the sentence to read: "If the contract does not include pay items for restoring the site in kind in accordance with section 816, the Department will consider the cost of restoration included in the pay items listed in this subsection."
698	820.04.B	Delete the second paragraph of this subsection found on this page.
698	820.04.C	Change "**Fdns**" to read "**Fdn**" in four instances in this subsection.
701	820.04.J.3	Change the sentence to read: "Installing wires in the saw slots and to the handholes;"
701.	820.04.J	Add the following as a new subsection: "7. A 3/4 inch minimum flexible conduit (non-metallic and rated for underground use) from the pavement to the handhole."
706	821.01.B	Change the website address listed after the second paragraph on this page to read: "http://www.ngs.noaa.gov/heightmod/GuidelinesPublications.shtml"
711	822.03.B	Change the second paragraph to read: "If corrugations are required on concrete shoulders and the method of installation is not shown on the plans or directed by the Engineer, construct corrugations by grinding, or cutting."
720	823.04	Change the pay item seventh from the bottom of the list to read: "Water Shutoff, Adj, Temp, Case __"

Page	Subsection	Errata
730	824.03.Q	Change the third sentence of the fourth paragraph to read: “Ensure placement of monumentation in accordance with section 821.”
730	824.03.Q	Change the first sentence of the last paragraph to read: “The Department will not pay for work dependent on lost or destroyed stakes until the Contractor replaces the stakes.”
732	824.04	Change the first sentence of the first paragraph following the list of pay items to read: “If the Engineer determines the Contractor will perform staking as extra work, the Department will pay for staking in accordance with section 103.”
733	824.04	Change the left column header in Table 824-2 to read: “**Percent of Original Contract Amount Earned”**
739	902.02	Change the last aggregate testing description to read: “Determining Specific Gravity and Absorption of Fine Aggregates……..MTM 321”
742	902.03.C.1.a	Change the sentence to read: “Coarse aggregate includes all aggregate particles greater than or retained on the 3/4-inch sieve.”
742	902.03.C.2.a	Change the sentence to read: “Intermediate aggregate includes all aggregate particles passing the 3/4-inch sieve through those retained on the No. 4 sieve.”
744	902.07	Delete the fourth paragraph of the subsection and replace it with the following: “The Engineer will only allow the use of granular material produced from crushed portland cement concrete for embankment and as trench backfill for non-metallic culvert and sewer pipes without associated underdrains. However, granular material produced from crushed portland cement concrete is not permitted as swamp backfill, nor within the top 3 feet below subgrade regardless of the application.
746*	902.11	Change the Item of Work by Section Number column in Table 902-1 for the 6AA row to read: "406, 601, 602, 706, 708, 806". Change the Item of Work by Section Number column in Table 902-1 for the 6A row to read: "206, 401, 402, 406, 601, 602, 603, 706, 806". Change the Item of Work by Section Number column in Table 902-1 for the 34R row to read: "401, 404, 406".
751*	902.11	Replace Table 902-6 with the Table 902-6 below.
751	Table 902-7	Under the Material column in the fourth row change the "FA2" to read "2FA".

An asterisk (*) indicates an entry which has been revised from an earlier version of this Supplemental Specification.

Page	Subsection	Errata
751	Table 902-7	Under the Material column in the fifth row change the "FA3" to read "3FA".
752	Table 902-8	Under the Material column in the fourth row change the "FA2" to read "2FA".
752	Table 902-8	Under the Material column in the fifth row change the "FA3" to read "3FA".
761	Table 904-2	Delete the footnote f and any other reference to footnote f from the table.
767	905.03	Change the first sentence of the first paragraph to read: “Deformed bars, must meet the requirements of ASTM A 706, ASTM A 615, or ASTM A 996 (Type R or Type A only) for Grade 60 steel bars, unless otherwise required”.
767*	905.03	Change the first sentence of the second paragraph to read: “Unless otherwise specified, spiral reinforcement must meet the requirements of plain or deformed Grade 40 steel bars of ASTM A 615, ASTM A 996 (Type A), or the requirements of cold-drawn wire of ASTM A 1064”.
767	905.03	Change the first sentence of the third paragraph to read: “Bar reinforcement for prestressed concrete beams must meet the requirements of ASTM A 996 (Type R) for Grade 60 steel bars, except the Engineer will allow bar reinforcement that meets the requirements of ASTM A 615 or ASTM A 996 (Type A) for Grade 40 steel bars for stirrups in prestressed concrete beams”.
768	905.03.C	Change the first sentence in the subsection to read: "Epoxy coated steel reinforcement, if required, must be coated in accordance with ASTM A 775, with the following exceptions and additions."
768	905.03.C.3	Change the first sentence of this subsection to read: "Include written certification that the coated reinforcing bars were cleaned, coated, and tested in accordance with ASTM A 775 with the coating applicator."
768	905.05	Change the first sentence of the first paragraph to read: “Deformed steel bars must meet the requirements of ASTM A 706 or the requirements for Grade 40, Grade 50, or Grade 60 of ASTM A 615 or ASTM A 996 (Type R or Type A only)”.
768	905.06	Delete this subsection in its entirety and replace it with the following: "Deformed wire fabric for prestressed concrete and fabric for concrete pavement reinforcement must meet the requirements of ASTM A 1064 and fabricated as required."
772	906.07	Change the first paragraph to read:

Page	Subsection	Errata
		"High-strength bolt fasteners for structural joints must meet the requirements of ASTM A 325 Type 1 bolts. High-strength nuts for structural joints must meet the requirements of ASTM A 563 Grade DH or AASHTO M 292 Grade 2H. High-strength washers for structural joints must meet the requirements of ASTM F 436 Type 1 for circular, beveled, clipped circular, and clipped beveled washers." Change the second sentence of the second paragraph of this subsection to read: "Galvanized nuts must be tapped oversize in accordance with ASTM A 563 and meet Supplementary Requirements S1, Lubricant and Rotational Capacity Test for Coated Nuts and S2, Lubricant Dye."
772	906.08	Change the last sentence of the first paragraph to read "Washers must be made from austenitic stainless steel ASTM A 276 UNS designation S31600 or S31603."
777*	907.03.D.2.a	Change the first sentence of the second paragraph to read: “Angle sections must be nominal 2½ inch by 2½ inch by ¼ inch.”
777*	907.03.D.2.b	Change the first sentence of the first paragraph to read: “Angle section braces must be nominal 1¾ inch by 1¾ inch by ¼ inch or nominal 2 inch by 2 inch $^{3}/_{16}$ inch.”
782	908.04	Change the first sentence of the first paragraph of this subsection to read: "Steel castings for steel construction must meet the requirements of ASTM A 148 for Grade 60/90 carbon steel castings, as shown on the plans, unless the Engineer approves an alternate in writing."
783*	908.09.A	Change the title of this subsection and the first sentence to read "A. **Base Plates, Angle, and Non-Tubular Post Elements.** Galvanized base plates, angle, rail splice elements, and non-tubular post elements must meet the requirements of ASTM A 36 and ASTM A 123".
783*	908.09.B	Change the title of this subsection and the first sentence to read “B. **Rail Elements and Tubular Post Elements.** Rail elements and tubular post elements must meet the requirements of ASTM A 500, for Grade B and subsection 908.09.B and be galvanized in accordance with ASTM A 123”.
784	908.09.C	Change the second sentence to read: "Heavy hex nuts must meet the requirements of ASTM A 563." Change the third sentence to read: "Bolts, used as rail fasteners, washers and nuts must meet the requirements of ASTM A 325, Type 1." Change the sixth sentence to read:

Page	Subsection	Errata
		"All flat washers must meet the requirements of ASTM F 436." Add the following sentence to the end of the subsection: "Bolts, nuts, washers and other hardware must be hot-dip galvanized in accordance with AASHTO M 232."
785	908.11.B	Change the second paragraph to read: "Bolts, nuts, and round washers for guardrail, other than at bridge barrier railings, must meet the requirements of ASTM A 307, ASTM A 563 (Grade A with Supplementary Requirements S1 of ASTM A 563), and ASTM F 436, respectively." Change the third paragraph to read: "Washers, other than round washers, for guardrail must meet the requirements for circular washers in ASTM F 436 except that the dimensions must be as shown on the plans." Change the fifth paragraph to read: "Bolts, nuts, and washers for connections at bridge barrier railings must conform to ASTM A 325 Type 1 galvanized high-strength structural bolts with suitable nuts and hardened washers."
787	908.14.B	Add the following sentence to the end of the third paragraph of this subsection: "Exposed threaded ends of anchor bolts must be galvanized a minimum of 20 inches." Change the sixth paragraph in this subsection to read: "Provide washers meeting the requirements of ASTM F 436 for circular washers."
787	908.14.B	Change the second sentence of the fourth paragraph to read “After coating, the maximum limit of pitch and major diameter for bolts with a diameter no greater than 1 inch may exceed the Class 2A limit by no greater than 0.021 inch, and by no greater than 0.031 inch for bolts greater than 1 inch in diameter”.
787*	908.14.C	Change the first paragraph to read "Provide either four or six high strength anchor bolts per the contract plans, meeting the mechanical requirements of ASTM F 1554, for Grade 105, with each standard. Anchor bolts for traffic signal strain poles must meet the requirements of subsection 908.14.B with the following exceptions and additions:”
789	909.03	Change the second sentence of the second paragraph to read: "As an alternative to the AASHTO M 36 requirements for metal pipe, the Contractor may use gasket material meeting the low temperature flexibility and elevated temperature flow test requirements of ASTM C 990, excluding the requirements for softening point, flashpoint and fire point."

Page	Subsection	Errata
793	909.06	Change the first sentence of the second paragraph of this subsection to read: "Provide Corrugated Polyvinyl Chloride Pipe (CPV) and required fittings meeting the requirements of AASHTO M 304."
793*	909.05.D	Change the second sentence of the paragraph to read "Provide a continuous welded joint to create a watertight casing that is capable of withstanding handling and installation stresses. Perform field welding by the SMAW process using E7018 electrodes."
794*	909.08.A	Change the first sentence to read: "Provide bridge deck downspouts of PE pipe meeting the requirements of ASTM F 714, PE 4710, DR 26."
804	Table 909-9	In the note area at the bottom of the table change the designation of the second note from "c." to "b.".
811	910.04	Add the following sentence to the end of this subsection: "Fabricate silt fence according to subsection 916.02."
829*	912.08.K	Replace Table 912-10 with the Table 912-10 below.
833*	913.03.B	Change the first sentence of the first paragraph to read: "Clay brick, to construct manholes, catch basins, and similar structures, must meet the requirements of ASTM C 32, for Grade MS."
837*	914.04	Add the following as subsection 914.04.C: "C. **Lubricant-Adhesive for Neoprene Joint Seals**. The lubricant-adhesive must be a single-component moisture-curing polyurethane and aromatic hydrocarbon solvent mixture meeting ASTM D 2835, Type I. Ship in containers plainly marked with the lot or batch number of the material and date of manufacture. Store at temperatures between 58 and 80°F. Do not exceed 12 months shelf-life prior to use."
840	914.08	Change the first sentence of the second paragraph to read: "Straight tie bars for end-of-pour joints must consist of bars of the diameter and length shown on the plans meeting the requirements of ASTM A 615, ASTM A 706, or ASTM A 996 (Type R or Type A only)".
840*	914.09.A	Change the first sentence of the first paragraph to read: "Straight tie bars for longitudinal pavement joints must consist of bars of the diameter and length shown on the plans meeting the requirements of ASTM A 615, ASTM A 706, or ASTM A 996 (Type R or Type A only)".
840	914.09.B	Change the first sentence of the first paragraph to read: "Bent tie bars for bulkhead joints must consist of bars of the diameter and length shown on the plans."
841	914.12	In the first sentence of this subsection change "AASHTO Division II" to read "AASHTO LRFD Bridge Construction Specifications".

Page	Subsection	Errata
841*	914.13	In the first sentence of this subsection change "ASTM D 1248, for Type III, Class B" to read "ASTM D 4976, Group 2, Class 4, Grade 4".
844	916.01.A	Change the first sentence to read: "Cobblestone must consist of rounded or semi-rounded rock fragments with an average dimension from 3 inches to 10 inches."
845	916.01.D.1	Change the second sentence to read: "Checkdams for ditch grades 2 percent or greater must be constructed using cobblestone or broken concrete ranging from 3 inches to 10 inches in size."
851*	917.10.B.1	Delete the paragraph and replace it with the following: “1. **Class A.** Provide and apply Class A chemical nutrient fertilizer either according to MSU Soil Testing Lab Recommendations for Phosphorus Applications to Turfgrass, except the maximum single application rate of nutrient will be 48 pounds per acre, when soil tests are required or as indicated in subsections 917.10.B.1.a and 917.10.B.1.b.”
851	917.10.B.1	Add the MSU Soil Testing Lab Recommendations for Phosphorus Applications to Turfgrass, found below, after the first paragraph of this subsection.
853	917.15.B.1	Change the second sentence of the subsection to read: “The net must meet the requirements of subsection 917.15.D and be capable of reinforcing the blanket to prevent damage during shipping, handling, and installation.”
857	918.01	Add the following two paragraphs following the first paragraph of this subsection: “Wall thickness and outside diameter dimensions must conform to ASTM D 1785 for smooth-wall schedule 40 and 80 PVC conduit material. The Department will allow no more than 3 percent deviation from the minimum wall thickness specified. Wall thickness range must be within 12 percent in accordance with ASTM D 3035 for smooth-wall coilable schedule 40 and 80 PE conduit.”
858	918.01.E	Delete the first three sentences of the second paragraph shown on page 858.
863	918.06.F.1	Delete the third paragraph in this subsection in its entirety and replace it with the following: "Provide smooth or deformed welded wire fabric in accordance with ASTM A 1064."
864	918.07.C	Change the first sentence of the first paragraph to read: “Provide anchor bolts, nuts, and washers meeting the requirements of subsection 908.14.A and subsection 908.14.B.”

Page	Subsection	Errata
864	918.07.C	Delete the second sentence of the second paragraph.
864	918.07.C	Change the third sentence to read: “Provide anchor bolts threaded 4 inches beyond the anchor bolt projection shown on the plans.”
867	918.08.C	Change the last sentence of the first paragraph on this page to read: “Galvanize bolts, nuts, washers, and lock washers as specified in subsection 908.14.B.”
867	918.08.C	Change the last sentence of the subsection to read: “Provide each frangible base with manufacturer access covers as shown on the plans.”
867*	918.08.D	Delete this subsection in its entirety and replace with the following: "Provide galvanized anchor bolts, studs, nuts, couplings, and washers in accordance with subsection 908.14."
879	918.10.J	Change the third sentence of the second paragraph of this subsection to read: "Provide anchor bolts and associated nuts, washers, and hardware meeting the requirements of subsection 908.14."
887	919.06	Change the second paragraph to read: “Shims must be fabricated from brass shim stock or brass strip meeting the requirements of ASTM B 36, for copper alloy UNS No. C26000, half-hard rolled temper, or fabricated from galvanized sheeting meeting the requirements of ASTM A 653, for Coating Designation G 90.”
903	921.03.D	Delete the last three sentences of the first paragraph of this subsection.
914	921.05.D	Change the first sentence of this subsection to read: "Provide anchor bolts meeting the requirements of subsection 908.14.C, including elongation and reduction of area requirements."
916	921.07	Change the first sentence of the first paragraph to read: "Provide LED case signs internally illuminated by LEDs and changeable message case signs internally illuminated with LED light sources."
936	922.04.B	In the first sentence of the first paragraph change the "R-52" to "R-126".
936	922.04.B	Add the following to the end of the first paragraph: “Hardware used to connect the end section to the barrier must meet the requirements of NCHRP 350 or MASH (Test Level 3 or higher).”
936	922.04.B	In the first sentence of the second paragraph delete "R-52".
953*	Pay Item Index	Delete the following pay item reading: “DB Cable, in Conduit, 600 Volt, (number) 1/C# (size) .....678 819”

An asterisk (*) indicates an entry which has been revised from an earlier version of this Supplemental Specification.

Page	Subsection	Errata
957	Pay Item Index	Delete the following pay item from the list: Guardrail Buffered End 560 807
960	Pay Item Index	Change the following pay item to read: "Mobilization, Max (dollar) .....107 150"
961	Pay item Index	Delete the following pay items from the list: Pavt Mrkg, (material), 4 inch, SRSM, (color)……598……811 Pavt Mrkg, (material), 4 inch, SRSM, 2nd Application, (color)……598…...…811
961	Pay Item Index	Change the following pay items in the list to read: Pavt Mrkg, Ovly Cold Plastic, 12 inch, Cross Hatching, (color) Pavt Mrkg, Polyurea, __ inch, Cross Hatching, (color) Add the following pay items to the list: "Pavt Mrkg, Polyurea, (legend)…… ……..…598…….811 Pavt Mrkg, Polyurea, (symbol)……..…598…….811 Pedestal, Pushbutton, Alum…….....696…….820 Pedestal, Pushbutton, Rem…….……..696…….820"
962	Pay Item Index	Change the following pay items in the list to read: "Pile Driving Equipment, Furn (Structure No.) Pile, Galv (Structure No.)"
963	Pay Item Index	Change the following pay item to read: "Rem Curing Compound, for Longit Mrkg, __ inch .....598 811"
964	Pay Item Index	Change the following pay item to read: "Sewer, Cl __, __ inch, Jacked in Place .....200 402" "Sign Cover, Type I .....622 812"
965*	Pay Item Index	Change the following pay item in the list to read: "Steel Casing Pipe, __ inch, Tr Det __ Site Preparation, Max (dollar) .....646 815"
966	Pay Item Index	Delete the following pay item form the list; Temp Casing……...533…….718
967*	Pay Item Index	Delete the following pay item from the list; Truss Fdn Anchor Bolts, Replace……...584…..…810
967	Pay Item Index	Change the following pay item in the list to read: "Traf Regulator Control"
968*	Pay item Index	Change the following pay item in the list to read: "Water Shutoff, Adj, Temp, Case __ Watering and Cultivating, First Season, Min (dollar).....646 815 Watering and Cultivating, Second Season, Min (dollar) .....646 815"

An asterisk (*) indicates an entry which has been revised from an earlier version of this Supplemental Specification.

Page	Subsection	Errata
969	Pay item Index	Change the following pay item in the list to read: "Witness, Log, Layout, $1000.00"
993	General Index	Change "Shop Plans (see Plans and Working Drawings)" to read "Shop Drawings (see Plans and Working Drawings)".

Table 701-1
Concrete Structure Mixtures

Concrete Grade (e,h)	Section Number Reference (i)	Cement Content per cyd (b,c) lb	Cement Content per cyd (b,c) sack	Slump (inches) Type A, D or no Admixture	Slump (inches) Type MR, F, or G Admixtures (g) Before Admixture	Slump (inches) Type MR, F, or G Admixtures (g) After Admixture (Type MR)	Slump (inches) Type MR, F, or G Admixtures (g) After Admixture (Type F or G)	Minimum Strength of Concrete (f) Flexural (psi) 7 Day	Flexural (psi) 14 Day	Flexural (psi) 28 Day (Class Design Strength)	Compressive (psi) 7 Day	Compressive (psi) 14 Day	Compressive (psi) 28 Day (Class Design Strength)
D (a)	706, 711, 712	658 (d)	7.0	0 - 3	0 - 3	0 - 6	0 - 7	625	700	725	3,200	4,000	4,500
S1	705	611	6.5	3 - 5	0 - 3	3 - 6	3 - 7	600	650	700	3,000	3,500	4,000
T	705, 706	611	6.5	3 - 7	0 - 4	3 - 7	3 - 8	550	600	650	2,600	3,000	3,500
S2 (a)	401, 705, 706, 712, 713, 801, 802, 803, 810	564	6.0	0 - 3	0 - 3	0 - 6	0 - 7	550	600	650	2,600	3,000	3,500
		526 (d)	5.6										
S3	402, 403, 803, 804, 806	517	5.5	0 - 3	0 - 3	0 - 6	0 - 7	500	550	600	2,200	2,600	3,000
		489 (d)	5.2										

a. Unless otherwise required, use Coarse Aggregate 6AA or 17A for exposed structural concrete in bridges, retaining walls, and pump stations.
b. Do not place concrete mixtures containing supplemental cementitious materials unless the local average minimum temperature for the next 10 consecutive days is forecast to be above 40 °F. Adjustments to the time required for opening to construction or vehicular traffic may be necessary. Cold weather protection may be required, as described in the quality control plan. The restriction does not apply to Grade S1 concrete in foundation piling below ground level or Grade T concrete in tremie construction.
c. Type III cement is not permitted
d. Use admixture quantities specified by the Qualified Products Lists to reduce mixing water. Admixture use is required for Grade D, Grade S2, and Grade S3, concrete with a reduced cement content. Use a water-reducing retarding admixture at the required dosage for Grade D concrete to provide the setting retardation required. When the maximum air temperature is not forecast to exceed 60 °F for the day, the Contractor may use a water-reducing admixture or a water-reducing retarding admixture. Ensure Grade D concrete in concrete diaphragms contains a water-reducing admixture, or a water-reducing retarding admixture. For night casting, the Contractor may use a water-reducing admixture in lieu of water-reducing retarding admixture, provided that the concrete can be placed and finished prior to initial set.
e. The mix design basis for bulk volume (dry, loose) of coarse aggregate per unit volume of concrete is 68% for Grade S1, and 70% for Grade D, Grade S2, Grade T, and Grade S3.
f. The Contractor may use flexural strength to determine form removal. Use compressive strength for acceptance in other situations.
g. MR = Mid-range.
h. The Engineer will allow the use of an optimized aggregate gradation as specified in section 604.
i. Section Number Reference:

401	Culverts	711	Bridge Railings	803	Concrete Sidewalk, Sidewalk Ramps, and Steps
402	Storm Sewers	712	Bridge Rehabilitation-Concrete	804	Concrete Barriers and Glare Screens
403	Drainage Structures	713	Bridge Rehabilitation-Steel	806	Bicycle Paths
705	Foundation Piling	801	Concrete Driveways	810	Permanent Traffic Signs and Supports
706	Structural Concrete Construction	802	Concrete Curb, Gutter and Dividers		

An asterisk (*) indicates an entry which has been revised from an earlier version of this Supplemental Specification.

Table 902-6
Superpave Final Aggregate Blend Physical Requirements

Est. Traffic (million ESAL)	Mix Type	Percent Crushed Minimum Criteria		Fine Aggregate Angularity Minimum Criteria		% Sand Equivalent Minimum Criteria		Los Angeles Abrasion % Loss Maximum Criteria		% Soft Particles Maximum Criteria (b)		% Flat and Elongated Particles Maximum Criteria (c)	
		Top & Leveling Courses	Base Course	Top & Leveling Courses	Base Course	Top & Leveling Courses	Base Course	Top & Leveling Courses	Base Course	Top & Leveling Courses	Base Course	Top & Leveling Courses	Base Course
< 0.3	LVSP	55/—	—	—	—	40	40	45	45	10	10	—	—
< 0.3	E03	55/—	—	—	—	40	40	45	45	10	10	—	—
≥0.3 -<1.0	E1	65/—	—	40	—	40	40	40	45	10	10	—	—
≥1.0 - < 3	E3	75/—	50/—	40(a)	40(a)	40	40	35	40	5	5	10	10
≥3 - <10	E10	85/80	60/—	45	40	45	45	35	40	5	5	10	10
≥10 - <30	E30	95/90	80/75	45	40	45	45	35	35	3	4.5	10	10
≥30 - <100	E50	100/100	95/90	45	45	50	50	35	35	3	4.5	10	10

(a) For an E3 mixture type that enters the restricted zone as defined in Table 902-5, the minimum is 43. If these criteria are satisfied, acceptance criteria and associated incentive/disincentive or pay adjustment tied to this gradation restricted zone requirement included in contract, do not apply. Otherwise, final gradation blend must be outside of the restricted zone.
(b) Soft particles maximum is the sum of the shale, siltstone, ochre, coal, clay-ironstone and particles that are structurally weak or are non-durable in service.
(c) Maximum by weight with a 1 to 5 aspect ratio.

Note: “85/80” denotes that 85 percent of the coarse aggregate has one fractured face and 80 percent has at least two fractured faces.

An asterisk (*) indicates an entry which has been revised from an earlier version of this Supplemental Specification.

Table 912-10 Minimum Retention Requirements				
Preservative	**Minimum Retention, (pcf)**			**AWPA Standard**
	Guardrail Posts	**Sign Posts**	**Blocks**	
Pentachlorophenol	0.60	0.50	0.40	A6
CCA, ACZA	0.60	0.50	0.40	A11
ACQ (a)	0.60	Not Allowed	0.40	A11
CA-B (a)	0.31	Not Allowed	0.21	A11
CA-A (a)	0.31	Not Allowed	0.15	A11
Other Waterborne preservatives	AWPA Commodity Specification A, Table 3.0, Use Category 4B	Not Allowed	AWPA Commodity Specification A, Table 3.0, Use Category 4A	A11
a. Non-Metallic washers or spacers are required for timber and lumber treated with ACQ or CA placed in direct contact with aluminum. Do not use with sign posts.				

MSU Soil Testing Lab Recommendationsfor Phosphorus Applications to Turfgrass
3/8/2012

		Sand based rootzone establishment	Golf greens and tees est. or mature; Kentucky bluegrass or perennial ryegrass athletic fields est. or mature; sand based rootzone mature	Lawns, golf course fairways; establishment or mature	Establishment without soil test
Bray P1, Mehlich 3 Soil Test Value (ppm): pH<7.4	Olsen Soil Test Value (ppm) pH>7.4	Recommendation (lbs. P_2O_5/1000 ft.^{2})	Recommendation (lbs. P_2O_5/1000 ft.^{2})	Recommendation (lbs. P_2O_5/1000 ft.^{2})	Recommendation (lbs. P_2O_5/1000 ft.^{2})
					2.5 lbs. year (Maximum single application of 1.5 lbs.) 109 lbs/acre year (maximum single application of 65 lbs/acre)
0	0	4.4	3.4	2.5	
2	1.3	4.1	3.1	2.2	
4	2.7	3.9	2.7	1.9	
6	4	3.6	2.4	1.6	
8	5.3	3.4	2.0	1.3	
10	6.7	3.1	1.7	1.0	
12	8	2.8	1.4	0.7	
14	9.3	2.6	1.0	0.4	
16	10.7	2.3	0.7	0.1	
18	12	2.1	0.3	0.0	
20	13.3	1.8	0.0		
22	14.7	1.5			
24	16	1.3			
26	17.3	1.0			
28	18.7	0.8			
30	20	0.5			
32	21.3	0.2			
34	22.7	0.0			

Web resources: www.turf.msu.edu or www.bephosphorussmart.msu.edu

MICHIGAN
DEPARTMENT OF TRANSPORTATION

SPECIAL PROVISION
FOR
RECYCLED HOT MIX ASPHALT MIXTURE ON LOCAL AGENCY PROJECTS

CFS:KPK 1 of 2 APPR:JWB:CJB:03-13-14
FHWA:APPR:03-13-14

Add the following subsection to subsection 501.02.A.2, on page 234 of the Standard Specifications for Construction.

c. **Reclaimed Asphalt Pavement (RAP) and Binder Grade Selection**. The method for determining the binder grade in HMA mixtures incorporating RAP is divided into three categories designated Tier 1, Tier 2 and Tier 3. Each tier has a range of percentages that represent the contribution of the RAP binder toward the total binder, by weight. The tiers identified below apply to HMA mixtures with the following exception: Superpave mixture types E3, E3 High Stress, E10, E10 High Stress, E30, E30 High Stress, E50, and E50 High Stress used as leveling or top course must be limited to a maximum of 27 percent RAP binder by weight of the total binder in the mixture.

Recycled materials may be used as a substitute for a portion of the new materials required to produce HMA mixtures in accordance with contract.

- **Tier 1 (0% to 17% RAP binder by weight of the total binder in the mixture).** No binder grade adjustment is made to compensate for the stiffness of the asphalt binder in RAP.

- **Tier 2 (18% to 27% RAP binder by weight of the total binder in the mixture).** For all mixtures no binder grade change will occur in Tier 2 for all shoulder and temporary road mixtures.

  The required asphalt binder grade must be at least one grade lower for the low temperature than the design binder grade required for the specified project mixture type. Lowering the high temperature of the binder one grade is optional. For example, if the design binder grade for the mixture type is PG 58-22, the required grade for the binder in the HMA mixture containing RAP would be a PG 52-28 or a PG 58-28.

  For Marshall Mixes, no binder grade change will be required when Average Daily Traffic (ADT) is above 7000 or Commercial Average Daily Traffic (CADT) is above 700. No binder grade change will occur for LVSP, E03 and E1 mixtures used as leveling or top course.

  The asphalt binder grade can also be selected using a blending chart for high and low temperatures. Supply the blending chart and the RAP test data used in determining the binder selection according to *AASHTO M 323*.

- **Tier 3 (≥ 28% RAP binder by weight of the total binder in the mixture).** The binder

grade for the asphalt binder is selected using a blending chart for high and low temperatures per *AASHTO M 323*. Supply the blending chart and the RAP test data used in determining the binder selection.

MICHIGAN
DEPARTMENT OF TRANSPORTATION

SPECIAL PROVISION
FOR
ACCEPTANCE OF HOT MIX ASPHALT MIXTURE ON LOCAL AGENCY PROJECTS

CFS:KPK 1 of 7 APPR:CJB:JWB:10-15-15
FHWA:APPR:11-02-15

a. Description. This special provision provides sampling and testing requirements for local agency projects using the roller method and the nuclear density gauge testing. Provide the hot mix asphalt (HMA) mixture in accordance with the requirements of the standard specifications, except where modified herein.

b. Materials. Provide aggregates, mineral filler (if required), and asphalt binder to produce a mixture proportioned within the master gradation limits shown in the contract, and meeting the uniformity tolerance limits in Table 1.

Table 1: Uniformity Tolerance Limits for HMA Mixtures

Parameter			Top and Leveling Course		Base Course	
Number	Description		Range 1 (a)	Range 2	Range 1 (a)	Range 2
1	% Binder Content		-0.30 to +0.40	±0.50	-0.30 to +0.40	±0.50
2	% Passing	# 8 and Larger Sieves	±5.0	±8.0	±7.0	±9.0
		# 30 Sieve	±4.0	±6.0	±6.0	±9.0
		# 200 Sieve	±1.0	±2.0	±2.0	±3.0
3	Crushed Particle Content (b)		Below 10%	Below 15%	Below 10%	Below 15%

a. This range allows for normal mixture and testing variations. The mixture must be proportioned to test as closely as possible to the Job-Mix-Formula (JMF).
b. Deviation from JMF.

Parameter number 2 as shown in Table 1 is aggregate gradation. Each sieve will be evaluated on one of the three gradation tolerance categories. If more than one sieve is exceeding Range 1 or Range 2 tolerances, only the one with the largest exceedance will be counted as the gradation parameter.

The master gradation should be maintained throughout production; however, price adjustments will be based on Table 1. Aggregates which are to be used in plant-mixed HMA mixtures must not contain topsoil, clay, or loam.

c. Construction. Submit a Mix Design and a JMF to the Engineer. Do not begin production and placement of the HMA until receipt of the Engineer's approval of the JMF. Maintain the binder content, aggregate gradation, and the crushed particle content of the HMA mixture within the Range 1 uniformity tolerance limits in Table 1. For all mixtures, field regress air void content to 3.5 percent with liquid asphalt cement unless specified otherwise on HMA application estimate.

Ensure all persons performing Quality Control (QC) and Quality Assurance (QA) HMA field sampling are "Local Agency HMA Sampling Qualified" samplers. At the Pre-Production or Pre-Construction meeting, the Engineer will determine the method of sampling to be used. Ensure all sampling is done in accordance with *MTM 313 (Sampling HMA Paving Mixtures)* or *MTM 324 (Sampling HMA Paving Mixtures Behind the Paver)*. Samples are to be taken from separate hauling loads.

For production/mainline type paving, obtain a minimum of two samples, each being 20,000 grams, each day of production, for each mix type. The Engineer will sample and maintain possession of the sample. Sampling from the paver hopper is prohibited. Each sample will be divided into two 10,000 gram parts with one part being for initial testing and the other part being held for possible dispute resolution testing. Obtain a minimum of three samples for each mix type regardless of the number of days of production.

Obtain samples that are representative of the day's paving. Sample collection is to be spaced throughout the planned tonnage. One sample will be obtained in the first half of the tonnage and the second sample will be obtained in the second half of the tonnage. If planned paving is reduced or suspended, when paving resumes, the remaining sampling must be representative of the original intended sampling timing.

Ensure all persons performing testing are Bit Level One certified or Bit QA/QC Technician certified.

Ensure daily test samples are obtained, except, if the first test results show that the HMA mixture is in specification, the Engineer has the option of not testing additional samples from that day.

At the Pre-Production or Pre-Construction meeting, the Engineer and Contractor will collectively determine the test method for measuring asphalt content (AC) using *MTM 319 (Determination of Asphalt Content from Asphalt Paving Mixtures by the Ignition Method)* or *MTM 325 (Quantitative Extraction of Bitumen from HMA Paving Mixtures)*. Back calculation will not be allowed for determining asphalt content.

Ensure all labs performing local agency acceptance testing are qualified labs per the *HMA Production Manual* and participate in the MDOT round robin process, or they must be *AASHTO Materials Reference Laboratory* (AMRL) accredited for *AASHTO T 30* or *T 27*, and *AASHTO T 164* or *T 308*. Ensure on non-National Highway System (NHS) routes, Contractor labs are made available, and may be used, but they must be qualified labs as previously stated. Contractor labs may not be used on NHS routes. Material acceptance testing will be completed by the Engineer within 14 calendar days, except holidays and Sundays, for projects with less than 5,000 tons (plan quantity) of HMA and within 7 calendars days, except holidays and Sundays, for projects with 5,000 tons (plan quantity) or more of HMA, after the Engineer has obtained the samples. QA test results will be provided to the Contractor after the Engineer receives the QC test results. Failure on the part of the Engineer or the laboratory to provide Quality Assurance test results within the specified time frame does not relieve the Contractor of their responsibility to provide an asphalt mix within specifications.

The correlation procedure for ignition oven will be established as follows. Asphalt binder content based on ignition method from MTM 319. Gradation (*ASTM D 5444*) and Crushed particle content *(MTM 117)* based on aggregate from *MTM 319*. The incineration temperature will be established at the Pre-Production Meeting. The Contractor will provide a laboratory mixture sample to the

acceptance laboratory to establish the correction factor for each mix. Ensure this sample is provided to the Engineer a minimum of 14 calendar days prior to production.

For production/mainline type paving, the mixture may be accepted by visual inspection up to a quantity of 500 tons per mixture type, per project (not per day). For non-production type paving defined as driveways, approaches, and patching, visual inspection may be allowed regardless of the tonnage.

The mixture will be considered out-of-specification, as determined by the acceptance tests, if for any one mixture, two consecutive tests per parameter, (for Parameter 2, two consecutive aggregate gradations on one sieve) are outside Range 1 or Range 2 tolerance limits. If a parameter is outside of Range 1 tolerance limits and the second consecutive test shows that the parameter is outside of Range 2, then it will be considered to be a Range 1 out-of-specification. Consecutive refers to the production order and not necessarily the testing order. Out-of-specification mixtures are subject to a price adjustment per the Measurement and Payment section of this special provision.

Contractor operations will be suspended when the mixture is determined to be out-of-specification, but contract time will continue to run. The Engineer may issue a Notice of Non-Compliance with Contract Requirements (Form 1165), if the Contractor has not suspended operations and taken corrective action. Submit a revised JMF or proposed alterations to the plant and/or materials to achieve the JMF to the Engineer. Effects on the Aggregate Wear Index (AWI) and mix design properties will be taken into consideration. Production and placement cannot resume until receipt of the Engineer's approval to proceed.

Pavement in-place density will be measured using one of two approved methods. The method used for measuring in-place density will be agreed upon at a pre-production or pre-construction meeting.

Pavement in-place density tests will be completed by the Engineer during paving operations and prior to traffic staging changes. Pavement in-place density acceptance testing will be completed by the Engineer prior to paving of subsequent lifts and being open to traffic.

Option 1 – Direct Density Method

Use of a nuclear density gauge requires measuring the pavement density using the Gmm from the JMF for the density control target. The required in-place density of the HMA mixture must be 92.0 to 98.0 percent of the density control target. Nuclear density testing and frequency will be in accordance with the *MDOT Density Testing and Inspection Manual*.

Option 2 – Roller Method

The Engineer may use the Roller Method with a nuclear or non-nuclear density gauge to document achieving optimal density as discussed below.

Use of the density gauge requires establishing a rolling pattern that will achieve the required in-place density. The Engineer will measure pavement density with a density gauge using the Gmm from the JMF for the density control target.

Use of the Roller Method requires developing and establishing density frequency curves, and meeting the requirements of Table 2. A density frequency curve is defined as the measurement

and documentation of each pass of the finished roller until the in-place density results indicate a decrease in value. The previous recording will be deemed the optimal density. The Contractor is responsible for establishing and documenting an initial or QC rolling pattern that achieves the optimal in-place density. When the density frequency curve is used, the Engineer will run and document the density frequency curve for each half day of production to determine the number of passes to achieve the maximum density. Table 5, located at the end of this special provision, can be used as an aid in developing the density frequency curve. The Engineer will perform density tests using an approved nuclear or non-nuclear gauge per the manufacturer's recommended procedures.

Table 2: Minimum Number of Rollers Recommended Based on Placement Rate

Average Laydown Rate, Square Yards per Hour	Number of Rollers Required (a)	
	Compaction	Finish
Less than 600	1	1 (b)
601 - 1200	1	1
1201 - 2400	2	1
2401 - 3600	3	1
3601 and More	4	1

a. Number of rollers may increase based on density frequency curve.
b. The compaction roller may be used as the finish roller also.

After placement, roll the HMA mixture as soon after placement as the roller is able to bear without undue displacement or cracking. Start rolling longitudinally at the sides of the lanes and proceed toward the center of the pavement, overlapping on successive trips by at least half the width of the drum. Ensure each required roller is 8 tons minimum in weight unless otherwise approved by the Engineer.

Ensure the initial breakdown roller is capable of vibratory compaction and is a maximum of 500 feet behind the paving operations. The maximum allowable speed of each roller is 3 miles per hour (mph) or 4.5 feet per second. Ensure all compaction rollers complete a minimum of two complete rolling cycles prior to the mat temperature cooling to 180 degrees Fahrenheit (F). Continue finish rolling until all roller marks are eliminated and no further compaction is possible. The Engineer will verify and document that the roller pattern has been adhered to. The Engineer can stop production when the roller pattern is not adhered to.

d. Measurement and Payment. The completed work, as described, will be measured and paid for using applicable pay items as described in subsection 501.04 of the Standard Specifications for Construction, or the contract, except as modified below.

Base Price. Price established by the Department to be used in calculating incentives and adjustments to pay items and shown in the contract.

If acceptance tests, as described in section c. of this special provision, show that a Table 1 mixture parameter exceeds the Range 1, but not the Range 2, tolerance limits, that mixture parameter will be subject to a 10 percent penalty. The 10 percent penalty will be assessed based on the acceptance tests only unless the Contractor requests that the 10,000 gram sample part retained

for possible dispute resolution testing be tested. The Contractor has 4 calendar days from receipt of the acceptance test results to notify the Engineer, in writing, that dispute resolution testing is requested. The Contractors QC test results for the corresponding QA test results must result in an overall payment greater than QA test results otherwise the QA tests will not be allowed to be disputed. The Engineer has 4 calendar days to send the dispute resolution sample to the lab once dispute resolution testing is requested. The dispute resolution sample will be sent to an independent lab selected by the Local Agency, and the resultant dispute test results will be used to determine the penalty per parameter, if any. Ensure the independent lab is a MDOT QA/QC qualified lab or an AMRL HMA qualified lab. The independent lab must not have conflicts of interest with the Contractor or Local Agency. If the dispute testing results show that the mixture parameter is out-of-specification, the Contractor will pay for the cost of the dispute resolution testing and the contract base price for the material will be adjusted, based on all test result parameters from the dispute tests, as shown in Table 3 and Table 4. If the dispute test results do not confirm the mixture parameter is out-of-specification, then the Local Agency will pay for the cost of the dispute resolution testing and no price adjustment is required.

If acceptance tests, as described in section c. of this special provision, show that a Table 1 mixture parameter exceeds the Range 2 tolerance limits, the 10,000 gram sample part retained for possible dispute resolution testing will be sent, within 4 calendar days, to the MDOT Central Laboratory for further testing. The MDOT Central Laboratory's test results will be used to determine the penalty per mixture parameter, if any. If the MDOT Central Laboratory's results do not confirm the mixture parameter is out-of-specification, then no price adjustment is required. If the MDOT Central Laboratory's results show that the mixture is out-of-specification and the Engineer approves leaving the out-of-specification mixture in place, the contract base price for the material will be adjusted, based on all parameters, as shown in Table 3 and Table 4.

In the case that the Contractor disputes the results of the test of the second sample obtained for a particular day of production, the test turn-around time frames given would apply to the second test and there would be no time frame on the first test.

The laboratory (MDOT Central Laboratory or independent lab) will complete all Dispute Resolution testing and return test results to the Engineer, who will provide them to the Contractor, within 13 calendar days upon receiving the Dispute Resolution samples.

In all cases, when penalties are assessed, the penalty applies to each parameter, up to two parameters, that is out of specification.

Table 3: Penalty Per Parameter

Mixture Parameter out-of-Specification per Acceptance Tests	Mixture Parameter out-of-Specification per Dispute Resolution Test Lab	Price Adjustment per Parameter
NO	N/A	None
YES	NO	None
	YES	Outside Range 1 but not Range 2: decrease by 10%
		Outside Range 2: decrease by 25%

The quantity of material receiving a price adjustment is defined as the material produced from the time the first out-of-specification sample was taken until the time the sample leading to the first in-specification test was taken.

Each parameter of Table 1 is evaluated with the total price adjustment applied to the contract base price based on a sum of the two parameter penalties resulting in the highest total price adjustment as per Table 4. For example, if three parameters are out-of-specification, with two parameters outside Range 1 of Table 1 tolerance limits, but within Range 2 of Table 1 limits and one parameter outside of Range 2 of Table 1 tolerance limits and the Engineer approves leaving the mixture in place, the total price adjustment for that quantity of material is 35 percent.

Table 4: Calculating Total Price Adjustment

Cost Adjustment as a Sum of the Two Highest Parameter Penalties		
Number of Parameters Out-of-Specification	Range(s) Outside of Tolerance Limits of Table 1 per Parameter	Total Price Adjustment
One	Range 1	10%
	Range 2	25%
Two	Range 1 & Range 1	20%
	Range 1 & Range 2	35%
	Range 2 & Range 2	50%
Three	Range 1, Range 1 & Range 1	20%
	Range 1, Range 1 & Range 2	35%
	Range 1, Range 2 & Range 2	50%
	Range 2, Range 2 & Range 2	50%

Table 5: Density Frequency Curve Development

Tested by: _____ Date/Time: _____

Route/Location:		Air Temp:
Control Section/Job Number:		Weather:
Mix Type:	Tonnage:	Gauge:
Producer:	Depth:	Gmm:

Roller #1 Type:

Pass No.	Density	Temperature	Comments
1			
2			
3			
4			
5			
6			
7			
8			
Optimum			

Roller #2 Type:

Pass No.	Density	Temperature	Comments
1			
2			
3			
4			
5			
6			
7			
8			
Optimum			

Roller #3 Type:

Pass No.	Density	Temperature	Comments
1			
2			
3			
4			
5			
6			
7			
8			
Optimum			

Summary: _____

_____

_____

_____

_____

MICHIGAN
DEPARTMENT OF TRANSPORTATION

SPECIAL PROVISION
FOR
SUPERPAVE FINAL AGGREGATE BLEND REQUIREMENTS

CFS:KPK 1 of 2 APPR:JFS:CJB:04-03-15
FHWA:APPR:04-07-15

a. Description. This special provision establishes the Superpave final aggregate blend gradation requirements and the Superpave final aggregate blend physical requirements.

b. Materials. Replace Table 902-5 and Table 902-6 of the Standard Specifications for Construction with the following tables.

Table 902-5
Superpave Final Aggregate Blend Gradation Requirements

Standard Sieve	Percent Passing Criteria (control points)					
	Mixture Number					
	5	**4**	**3 Leveling Course**	**3 Base Course**	**2**	**LVSP** (a)
1½ inch	—	—	—	—	100	—
1 inch	—	—	100	100	90–100	—
3/4 inch	—	100	90–100	90–100	≤90	100
1/2 inch	100	90–100	≤90	≤90	—	75–95
3/8 inch	90–100	≤90	—	—	—	60–90
No. 4	≤90	—	—	—	—	45–80
No. 8	47-67	39-58	35–49	23–49	19–45	30–65
No. 16	—	—	—	—	—	20–50
No. 30	—	—	—	—	—	15–40
No. 50	—	—	—	—	—	10–25
No. 100	—	—	—	—	—	5–15
No. 200	2.0–10.0	2.0–10.0	2.0–8.0	2.0–8.0	1.0–7.0	3–6

a. For LVSP, less than 50 percent of the material passing the No. 4 sieve may pass the No. 30 sieve.

Table 902-6
Superpave Final Aggregate Blend Physical Requirements

Est. Traffic (million ESAL)	Mix Type	Percent Crushed Minimum Criteria		Fine Aggregate Angularity Minimum Criteria		% Sand Equivalent Minimum Criteria		Los Angeles Abrasion % Loss Maximum Criteria		% Soft Particles Maximum Criteria (a)		% Flat and Elongated Particles Maximum Criteria (b)	
		Top & Leveling Courses	Base Course	Top & Leveling Courses	Base Course	Top & Leveling Courses	Base Course	Top & Leveling Courses	Base Course	Top & Leveling Courses	Base Course	Top & Leveling Courses	Base Course
< 0.3	LVSP	55/—	—	—	—	40	40	45	45	10	10	—	—
< 0.3	E03	55/—	—	—	—	40	40	45	45	10	10	—	—
≥0.3 -<1.0	E1	65/—	—	40	—	40	40	40	45	10	10	—	—
≥1.0 - < 3	E3	75/—	50/—	43	40	40	40	35	40	5	5	10	10
≥3 - <10	E10	85/80	60/—	45	40	45	45	35	40	5	5	10	10
≥10 - <30	E30	95/90	80/75	45	40	45	45	35	35	3	4.5	10	10
≥30 - <100	E50	100/100	95/90	45	45	50	50	35	35	3	4.5	10	10

(a) Soft particles maximum is the sum of the shale, siltstone, ochre, coal, clay-ironstone and particles that are structurally weak or are non-durable in service.
(b) Maximum by weight with a 1 to 5 aspect ratio.

Note: “85/80” denotes that 85 percent of the coarse aggregate has one fractured face and 80 percent has at least two fractured faces.

CITY OF SOUTH HAVEN
DUNKLEY & BLACK RIVER
INFRASTRUCTURE IMPROVEMENTS

SPECIAL PROVISION
FOR
STRUCTURAL CONCRETE

MCD:JMK 1 of 1 05-03-2016

a. Description.- Structural concrete work includes the construction of the concrete pile caps to support the new manholes. Furnish all materials, labor, and equipment to construct the reinforced concrete piles caps as shown on the Drawings. All concrete work shall conform to the requirements of Section 706 of the MDOT 2012 Standard Specifications for Construction, except for Measurement and Payment.

b. Materials.- All structural concrete shall consist of Concrete, Grade S2.

c. Measurement and Payment.- The complete work as measured will be paid for at the contract unit price for the following contract item (pay item), and includes materials, equipment, and labor to complete this work. The cradle support, including all hardware, at the transition into the manholes is included in the REINFORCED CONCRETE PILE CAP pay item.

Contract Item (Pay Item)	**Pay Unit**
REINFORCED CONCRETE PILE CAP	EACH

CITY OF SOUTH HAVEN
DUNKLEY & BLACK RIVER
INFRASTRUCTURE IMPROVEMENTS

SPECIAL PROVISION
FOR
STRUCTURAL STEEL

a. Description.-This work consists of furnishing all materials, labor, and equipment to provide and install the steel sheet piling and steel channels, and miscellaneous structural steel and metal items shown on the Drawings, and all required connections and fasteners.

General: Structural steel is that work defined in American Institute of Steel Construction (AISC) “Code of Standard Practice”.

Construction shall be in accordance with the details shown on the Drawings and as specified herein.

Quality Assurance: The material and work shall comply with the latest editions of the following standard specifications unless otherwise specified:

- ASTM A6 General Requirements for Rolled Steel Plates, Shapes, Sheet Piling, and Bars for Structural Use.
- ASTM A572 Structural Steel
- ASTM A36 Structural Steel
- ASTM A307 Carbon Steel Externally Threaded Standard Fasteners.
- ASTM A328 Steel Sheet Piling
- ASTM A668 Steel Forgings, Carbon and Alloy, for General Industrial Use.
- AWS D1.1 Code for Welding in Building Construction. "Building Commissioner" as used therein is interpreted to mean the Engineer.
- AWS A5.1 Mild Steel Covered Arc-Welding Electrodes.

The standard specifications listed shall be referred to in this Specification Section by basic numerical designation only.

The Contractor shall establish and maintain a quality control system for all operations performed under this Section to provide compliance with contract operations performed, including, but not limited to, the following.

CITY OF SOUTH HAVEN
DUNKLEY & BLACK RIVER
INFRASTRUCTURE IMPROVEMENTS

SPECIAL PROVISION
FOR
STRUCTURAL STEEL

Welder Certification: Shop and field welders shall be qualified in accordance with par. 5.3 of the AWS Code, by an independent agency within one (1) year before their employment on the Project. Provide one (1) copy of each certificate to the Engineer before commencing fabrication or erection, respectively. Costs of qualification, or of confirmation of previous qualification, are included within the scope of this Section.

Submittals: The Contractor shall submit to the Engineer the following items in triplicate within thirty (30) days after award of contract for this project:

- Mill certifications for steel materials.
- Notarized copies of chemical and physical test results of steel piling to show compliance with ASTM A328.
- Name, address, etc. and standard descriptive literature of manufacturer of steel sheet piling listing product information and recommended installation procedures.
- Notarized test reports indicating that the material has met the specified minimum interlock strength of the interlocked joint.
- Submit manufacturer's test reports per AWS A5.1 or AWS A5.5, as applicable for electrodes of the same class, size and brand, manufactured by the same process and with the same materials as the electrodes furnished. Tests shall be made within one (1) year of manufacture of the electrodes furnished.

Submittals must be reviewed and accepted prior to start of any structural steel operations.

Product Delivery, Storage, and Handling: Store and handle materials carefully to prevent damage to steel sheet piling, steel channels and miscellaneous metal and piling structural units.

Store piles in orderly groups above ground and blocked during storage to minimize possible distortion of members. Piles exhibiting variation beyond factory tolerance levels will be considered distorted and must not be used in the Work.

CITY OF SOUTH HAVEN
DUNKLEY & BLACK RIVER
INFRASTRUCTURE IMPROVEMENTS

SPECIAL PROVISION
FOR
STRUCTURAL STEEL

Blocking shall be spaced at distances sufficiently short to prevent excessive sag, and between lifts placed directly over each preceding blocking series. At the ends, piles shall not overhang more than two feet from the blocking.

Store materials only in areas designated on the Drawings.

Connectors and other miscellaneous loose items shall be stored in cartons, in a facility protected from the weather.

Provide handling holes in sheet piling per manufacturer's standard. When lifting piles, slings should be positioned so that there is no concentration of weight at any one point.

Electrodes shall be received on the site in unbroken packages bearing the manufacturer's label.

b. Materials.

General: Fabricate in accordance with the standards specified under the Quality Assurance Section and with normal fabrication practices to provide complete assemblies as detailed, capable of being erected into a complete safe, well built structure.

DO NOT SUBSTITUTE sections or modify details except upon written approval from the Engineer. Sections shall be full length pieces between connections or splices indicated on the Drawings. Sections shall not be warped or damaged. All steel shall be free from surface defects in accordance with the applicable ASTM Standard.

Steel Sheet Piling: Steel sheet piling shall be new, manufactured by a single source, and of a design that assures continuous interlock throughout the entire length when in place.

Steel sheet piles and interlocks shall not have excessive kinks, camber or twist that would prevent the pile from reasonably free sliding.

Steel sheet piles shall conform to ASTM A572, Grade 50.

Steel Channels: Steel channels shall conform to ASTM A572, Grade 50.

CITY OF SOUTH HAVEN
DUNKLEY & BLACK RIVER
INFRASTRUCTURE IMPROVEMENTS

SPECIAL PROVISION
FOR
STRUCTURAL STEEL

Other: Special shapes shall be cut from the specified pile sections. Other structural shapes not listed above shall conform to ASTM A 36.

Welding electrodes shall conform to the requirements of AWS A5.1, Class E70 or approved equal.

Connectors shall conform to ASTM A307.

c. Construction

Steel Channels: After timber piles have been driven in place, channels shall be carefully located as shown on the Drawings.

Holes shall be provided in the channels for bolts at the locations and of sizes shown on the Drawings. The holes shall be drilled or punched in place, by methods acceptable to the manufacturer, which will not injure remaining metal.

Steel Sheet Piling: After steel channels have be installed and bolted to the timber piles, sheet piles shall be carefully located as shown on the drawings.

Each steel pile shall be interlocked with adjoining piles for its entire length, so as to form a continuous diaphragm, throughout the length of the alignment. The interlocks of the steel sheet piling shall be properly engaged with the thumb of each pile gripped by the thumb and finger of the adjacent pile.

Welded Connections: No welding will be done if ambient temperature is below 0° F. Weld by the shielded arc method, per AWS D1.1. Pre-heat material to be welded and maintain interpass temperatures as required. Protect all finished material from damage due to welding.

All inspection of control the quality of welds shall conform with the AWS code. The quality of welds and the standards of acceptability shall be in accordance with Article 8.15 and Section 6 of the Code. The costs of such interim inspections are included within the scope of this Section.

CITY OF SOUTH HAVEN
DUNKLEY & BLACK RIVER
INFRASTRUCTURE IMPROVEMENTS

SPECIAL PROVISION
FOR
STRUCTURAL STEEL

Bolted Connections: Bolted connections shall be made in accordance with the AISC Specification "Structural Joints Using ASTM A307 Bolts" and shall be spaced as shown on the Drawings.

Field Erection: Surfaces in contact shall be thoroughly clean when assembled.

Adjustment and Cleaning: Upon completion of the operations under this Section, remove all excess material and debris, clean and repair all damaged surfaces, and obtain the Owner's Representative's approval of the completed installation.

d. Measurement and Payment.- The complete work as measured for the STRUCTURAL STEEL will be paid for at the contract unit price for the following contract items (pay items), and includes materials, equipment, and labor to complete this Work. The pay unit for the PILE CRADLE is for the pair of sheets required to form the complete cradle for pipe support. Welding and filter fabric required for the cradle support depicted on the Drawings shall be included in the PILE CRADEL pay item. Hardware for the channels is included in the PIPE SUPPOR CHANNEL pay item.

Contract Item (Pay Item)	**Pay Unit**
PIPE CRADLE	LINEAL FOOT
PIPE SUPPORT CHANNEL	PER PAIR AT EACH SUPPORT

CITY OF SOUTH HAVEN
DUNKLEY & BLACK RIVER
INFRASTRUCTURE IMPROVEMENTS

SPECIAL PROVISION
FOR
TIMBER PILING

MCD:JMK 1 of 2 05-03-2016

a. Description.- This work consists of the driving of timber piles to the required capacity at the locations shown the Drawings. The Contractor shall provide all labor, materials, equipment, and incidentals. Included in the Work are furnishing, driving, cutting-off, and all other Work for piling.

Submittals: The contractor shall submit a wave equation analysis at least one week prior to commencing pile installation. The analysis shall indicate the driving resistance required to achieve an ultimate pile capacity of 68 kips with a factor of safety of 2 (i.e., allowable load capacity of 34 kips after subtracting downdrag).

b. Materials.- All piling shall conform to timber pile specifications depicted in the 2012 Michigan Department of Transportation (MDOT) Standard Specifications for Construction.

c. Construction.- Timber piles shall be fresh cut on the butt end just before placing in the leads for driving. When the area of the head of any timber pile is greater than that of the face of the hammer, the pile shall be snipped or chamfered for at least the depth of the sapwood of the pile.

Steel anvil blocks that fit snugly over the head of the pile may be used when driving timber piles. However, all timber piles shall be driven by striking directly on the head of the pile without the use of cushions or blocks, insofar as practicable and approved by the Engineer.

Hammers used for driving shall be powered by either steam, air, or diesel capable of developing 15,000 foot-pounds of energy per blow.

All piles shall be driven with leads. Hanging or swinging leads can be used provided the pile can be held in a fixed position during the driving operations. When driving treated timber piles, the use of spuds and chocks in the leads shall be kept at a minimum in order that the protective treatment will not become bruised or broken.

The driving of piling with followers shall be avoided if practicable and shall be done only under written permission of the Engineer.

CITY OF SOUTH HAVEN
DUNKLEY & BLACK RIVER
INFRASTRUCTURE IMPROVEMENTS

SPECIAL PROVISION
FOR
TIMBER PILING

All piles shall be driven to a minimum ultimate capacity of 68 kips, as determined by a wave equation analysis.

Templates or other suitable methods shall be used to insure the required degree of accuracy. Pulling or stressing of piles to bring them into suitable line and position for cut-off and capping will be permitted only upon approval of the Engineer. The Contractor will be required to remove and re-drive piles driven too far out of line. Pile tolerances shall be no more than 3 inches from the plan location, and vertical tolerance shall be 1 percent or less of the total pile length.

Any pile driven too far out of line or so injured by driving or straightening so as to impair its structural value as a pile under the conditions of use shall be pulled and replaced by a new pile at the Contractor's expense. Any piles pushed up by the driving of adjacent piles or by other cause shall be driven down again.

After driving, cut off top of pile at design cut-off elevation.

Purchaser of piling shall have the right to employ an independent inspection service to inspect and test all treated piling. The independent inspector shall have the authority to reject any piling not conforming to this specification. Piling supplier shall furnish a certificate stating compliance with this specification.

The pile contractor shall submit pile driving records for each pile installed, including the final set of the pile. The Engineer will review the driving records, pile locations, and condition of the piles after installation. The Engineer reserves the right to reject any pile damaged during driving or any pile not within the stated project tolerances.

d. Measurement and Payment.- The complete work as measured for the TIMBER PILING will be paid for at the contract unit price for the following contract item (pay item) and includes materials, equipment, and labor to complete the Work.

Contract Item (Pay Item)	**Pay Unit**
TIMBER PILES	PER PILE

Appendix A
Employment Matters & Hiring

A-1: Davis Bacon Wages

A-2: Labor Standards Provisions for Federally Assisted Projects

A-3: Disadvantaged Business Enterprises (DBE) Requirements

REQUIRED STANDARD CONTRACT LANGUAGE: CLEAN WATER STATE REVOLVING FUND AND DRINKING WATER REVOLVING FUND

- **Davis-Bacon/Prevailing Federal Wages, Including Labor Standards Provisions**
- **Disadvantaged Business Enterprise (DBE) Requirements***
- **Debarment/Suspension Certification***

*** Bidders should note these sections contain instructions regarding forms/information that must be completed/included with any submitted bid.**

Davis-Bacon/Prevailing Federal Wage Rates

P.L. 111-88 requires compliance with the Davis Bacon Act and adherence to the current U.S. Department of Labor Wage Decision. Attention is called to the fact that not less than the minimum salaries and wages as set forth in the Contract Documents (see Wage Decision included herein) must be paid on this project. The Wage Decision, including modifications, must be posted by the Contractor on the job site. A copy of the Federal Labor Standards Provisions is included and is hereby a part of this contract.

General Decision Number: MI160001 02/26/2016 MI1

Superseded General Decision Number: MI20150001

State: Michigan

Construction Types: Highway (Highway, Airport & Bridge xxxxx and Sewer/Incid. to Hwy.)

Counties: Michigan Statewide.

Note: Under Executive Order (EO) 13658, an hourly minimum wage of $10.15 for calendar year 2016 applies to all contracts subject to the Davis-Bacon Act for which the solicitation was issued on or after January 1, 2015. If this contract is covered by the EO, the contractor must pay all workers in any classification listed on this wage determination at least $10.15 (or the applicable wage rate listed on this wage determination, if it is higher) for all hours spent performing on the contract in calendar year 2016. The EO minimum wage rate will be adjusted annually. Additional information on contractor requirements and worker protections under the EO is available at www.dol.gov/whd/govcontracts.

Modification Number	Publication Date
0	01/08/2016
1	01/15/2016
2	02/26/2016

CARP0004-004 06/01/2013

REMAINDER OF STATE

	Rates	Fringes
CARPENTER (Piledriver).....	$ 25.34	17.37

CARP0004-005 06/01/2013

LIVINGSTON (Townships of Brighton, Deerfield, Genoa, Hartland, Oceola & Tyrone), MACOMB, MONROE, OAKLAND, SANILAC, ST. CLAIR AND WAYNE COUNTIES

	Rates	Fringes
CARPENTER (Piledriver).....	$ 28.09	24.31

ELEC0017-005 06/01/2015

STATEWIDE

	Rates	Fringes
Line Construction		
Groundman/Driver.....	$ 27.24	12.70
Journeyman Signal Tech,		

Communications Tech, Tower Tech & Fiber Optic Splicers	$ 36.97	15.37
Journeyman Specialist	$ 42.52	16.89
Operator A	$ 31.32	13.82
Operator B	$ 29.27	13.26

Classifications

Journeyman Specialist: Refers to a crew of only one person working alone.
Operator A: Shall be proficient in operating all power equipment including: Backhoe, Excavator, Directional Bore and Boom/Digger truck.
Operator B: Shall be proficient in operating any 2 of the above mentioned pieces of equipment listed under Operator A.

ENGI0324-003 06/01/2015

ALCONA, ALPENA, ARENAC, BAY, CHEBOYGAN, CLARE, CLINTON, CRAWFORD, GENESEE, GLADWIN, GRATIOT, HURON, INGHAM, IOSCO, ISABELLA, JACKSON, LAPEER, LENAWEE, LIVINGSTON, MACOMB, MIDLAND, MONROE, MONTMORENCY, OAKLAND, OGEMAW, OSCODA, OTSEGO, PRESQUE ISLE, ROSCOMMON, SAGINAW, ST. CLAIR, SANILAC, SHIAWASSEE, TUSCOLA, WASHTENAW AND WAYNE COUNTIES:

	Rates	Fringes
OPERATOR: Power Equipment (Steel Erection)		
GROUP 1	$ 43.82	22.05
GROUP 2	$ 44.82	22.05
GROUP 3	$ 42.32	22.05
GROUP 4	$ 43.32	22.05
GROUP 5	$ 40.82	22.05
GROUP 6	$ 41.82	22.05
GROUP 7	$ 40.55	22.05
GROUP 8	$ 41.55	22.05
GROUP 9	$ 40.10	22.05
GROUP 10	$ 41.10	22.05
GROUP 11	$ 39.37	22.05
GROUP 12	$ 40.37	22.05
GROUP 13	$ 39.01	22.05
GROUP 14	$ 40.01	22.05
GROUP 15	$ 38.37	22.05
GROUP 16	$ 36.67	22.05
GROUP 17	$ 31.56	22.05
GROUP 18	$ 30.15	22.05

FOOTNOTE:

Paid Holidays: New Year's Day, Memorial Day, Fourth of July, Labor Day, Thanksgiving Day and Christmas Day.

POWER EQUIPMENT OPERATOR CLASSIFICATIONS

GROUP 1: Engineer when operating combination of boom and jib 400' or longer

GROUP 2: Engineer when operating combination of boom and jib 400' or longer on a crane that requires an oiler

GROUP 3: Engineer when operating combination of boom and jib 300' or longer

GROUP 4: Engineer when operating combination of boom and jib 300' or longer on a crane that requires an oiler

GROUP 5: Engineer when operating combination of boom and jib 220' or longer

GROUP 6: Engineer when operating combination of boom and jib 220' or longer on a crane that requires an oiler

GROUP 7: Engineer when operating combination of boom and jib 140' or longer

GROUP 8: Engineer when operating combination of boom and jib 140' or longer on a crane that requires an oiler

GROUP 9: Tower crane & derrick operator (where operator's work station is 50 ft. or more above first sub-level)

GROUP 10: Tower crane & derrick operator (where operator's work station is 50 ft. or more above first sub-level) on a crane that requires an oiler

GROUP 11: Engineer when operating combination of boom and jib 120' or longer

GROUP 12: Engineer when operating combination of boom and jib 120' or longer on a crane that requires an oiler

GROUP 13: Crane operator; job mechanic and 3 drum hoist and excavator

GROUP 14: Crane operator on a crane that requires an oiler

GROUP 15: Hoisting operator; 2 drum hoist and rubber tired backhoe

GROUP 16: Forklift and 1 drum hoist

GROUP 17: Compressor or welder operator

GROUP 18: Oiler

ENGI0324-004 06/01/2014

AREA 1: ALLEGAN, BARRY, BERRIEN, BRANCH, CALHOUN, CASS, EATON, HILLSDALE, IONIA, KALAMAZOO, KENT, LAKE, MANISTEE, MASON, MECOSTA, MONTCALM, MUSKEGON, NEWAYGO, OCEANA, OSCEOLA, OTTAWA, ST. JOSEPH, VAN BUREN

AREA 2: ANTRIM, BENZIE, CHARLEVOIX, EMMET, GRAND TRAVERSE, KALKASKA, LEELANAU, MISSAUKEE AND WEXFORD COUNTIES:

	Rates	Fringes
OPERATOR: Power Equipment (Steel Erection)		
AREA 1		
GROUP 1	$ 29.44	21.70
GROUP 2	$ 29.19	21.70
GROUP 3	$ 28.69	21.70
GROUP 4	$ 23.59	21.70
GROUP 5	$ 21.94	21.70
GROUP 6	$ 19.34	21.70
AREA 2		
GROUP 1	$ 29.44	21.70
GROUP 2	$ 29.19	21.70
GROUP 3	$ 28.19	21.70
GROUP 4	$ 23.29	21.70
GROUP 5	$ 21.64	21.70
GROUP 6	$ 18.84	21.70

FOOTNOTES:

Crane operator with main boom and jib 300' or longer: $1.50 additional to the group 1 rate. Crane operator with main boom and jib 400' or longer: $3.00 additional to the group 1 rate.
PAID HOLIDAYS: New Year's Day, Memorial Day, Fourth of July, Labor Day, Thanksgiving Day and Christmas Day.

POWER EQUIPMENT OPERATOR CLASSIFICATIONS:

GROUP 1: Crane Operator with main boom & jib 400', 300', or 220' or longer.

GROUP 2: Crane Operator with main boom & jib 140' or longer, Tower Crane; Gantry Crane; Whirley Derrick.

GROUP 3: Regular Equipment Operator, Crane, Dozer, Loader, Hoist, Straddle Wagon, Mechanic, Grader and Hydro Excavator.

GROUP 4: Air Tugger (single drum), Material Hoist Pump 6" or over, Elevators, Brokk Concrete Breaker.

GROUP 5: Air Compressor, Welder, Generators, Conveyors

GROUP 6: Oiler and fire tender

ENGI0324-005 09/01/2015

AREA 1: GENESEE, LAPEER, LIVINGSTON, MACOMB, MONROE, OAKLAND, ST. CLAIR, WASHTENAW AND WAYNE COUNTIES

AREA 2: ALCONA, ALLEGAN, ALGER, ALPENA, ANTRIM, ARENAC, BARAGA, BARRY, BAY, BENZIE, BERRIEN, BRANCH, CALHOUN, CASS, CHARLEVOIX, CHEBOYGAN, CHIPPEWA, CLARE, CLINTON, CRAWFORD, DELTA, DICKINSON, EATON, EMMET, GLADWIN, GOGEBIC, GRAND TRAVERSE, GRATIOT, HILLSDALE, HOUGHTON, HURON, INGHAM, IONIA, IOSCO, IRON, ISABELLA, JACKSON, KALAMAZOO, KALKASKA, KENT, KWEENAW, LAKE, LEELANAU, LENAWEE, LUCE, MACKINAC, MANISTEE,

MARQUETTE, MASON, MECOSTA, MENOMINEE, MIDLAND, MISSAUKEE, MONTCALM, MONTMORENCY, MUSKEGON, NEWAYGO, OCEANA, OGEMAW, ONTONAGON, OSCEOLA, OSCODA, OTSEGO, OTTAWA, PRESQUE ISLE, ROSCOMMON, SAGINAW, SANILAC, SCHOOLCRAFT, SHIAWASSEE, ST. JOSEPH, TUSCOLA, VAN BUREN AND WEXFORD COUNTIES

	Rates	Fringes
OPERATOR: Power Equipment (Underground construction (including sewer))		
AREA 1:		
GROUP 1	$ 31.43	21.85
GROUP 2	$ 26.45	21.85
GROUP 3	$ 25.72	21.85
GROUP 4	$ 25.15	21.85
AREA 2:		
GROUP 1	$ 29.47	21.85
GROUP 2	$ 24.58	21.85
GROUP 3	$ 24.08	21.85
GROUP 4	$ 23.80	21.85

POWER EQUIPMENT OPERATOR CLASSIFICATIONS

GROUP 1: Backfiller tamper; Backhoe; Batch plant operator (concrete); Clamshell; Concrete paver (2 drums or larger); Conveyor loader (Euclid type); Crane (crawler, truck type or pile driving); Dozer; Dragline; Elevating grader; Endloader; Gradall (and similar type machine); Grader; Mechanic; Power shovel; Roller (asphalt); Scraper (self-propelled or tractor drawn); Side boom tractor (type D-4 or equivalent and larger); Slip form paver; Slope paver; Trencher (over 8 ft. digging capacity); Well drilling rig; Concrete pump with boom operator; Hydro Excavator

GROUP 2: Boom truck (power swing type boom); Crusher; Hoist; Pump (1 or more - 6-in. discharge or larger - gas or diesel- powered or powered by generator of 300 amperes or more - inclusive of generator); Side boom tractor (smaller than type D-4 or equivalent); Tractor (pneu-tired, other than backhoe or front end loader); Trencher (8-ft. digging capacity and smaller);Vac Truck

GROUP 3: Air compressors (600 cfm or larger); Air compressors (2 or more-less than 600 cfm); Boom truck (non-swinging, non- powered type boom); Concrete breaker (self-propelled or truck mounted - includes compressor); Concrete paver (1 drum-1/2 yd. or larger); Elevator (other than passenger); Maintenance person; Pump (2 or more-4-in. up to 6-in. discharge-gas or diesel powered - excluding submersible pumps); Pumpcrete machine (and similar equipment); Wagon drill (multiple); Welding machine or generator (2 or more-300 amp. or larger - gas or diesel powered)

GROUP 4: Boiler; Concrete saw (40 hp or over); Curing machine (self-propelled); Farm tractor (with attachment); Finishing machine (concrete); Fire person; Hydraulic pipe pushing machine; Mulching equipment; Oiler; Pumps (2 or more up to

4-in. discharge, if used 3 hours or more a day, gas or diesel powered - excluding submersible pumps); Roller (other than asphalt); Stump remover; Trencher (service); Vibrating compaction equipment, self-propelled (6 ft. wide or over); End dump operator; Sweeper (Wayne type); Water wagon and Extend-a boom forklift

---

ENGI0324-006 06/01/2015

AREA 1: GENESEE, MACOMB, MONROE, OAKLAND, WASHTENAW AND WAYNE COUNTIES
AREA 2: ALCONA, ALGER, ALLEGAN, ALPENA, ANTRIM, ARENAC, BARAGA, BARRY, BAY, BENZIE, BERRIEN, BRANCH, CALHOUN, CASS, CHARLEVOIX, CHEBOYGAN, CHIPPEWA, CLARE, CLINTON, CRAWFORD, DELTA, DICKINSON, EATON, EMMET, GLADWIN, GOGEBIC, GRAND TRAVERSE, GRATIOT, HILLSDALE, HOUGHTON, HURON, INGHAM, IONIA, IOSCO, IRON, ISABELLA, JACKSON, KALAMAZOO, KALKASKA, KENT, KEWEENAW, LAKE, LAPEER, LEELANAU, LENAWEE, LIVINGSTON, LUCE, MACKINAC, MANISTEE, MARQUETTE, MASON, MECOSTA, MENOMINEE, MIDLAND, MISSAUKEE, MONTCALM, MONTMORENCY, MUSKEGON, NEWAYGO, OCEANA, OGEMAW, ONTONAGON, OSCEOLA, OSCODA, OTSEGO, OTTAWA, PRESQUE ISLE, ROSCOMMON, SAGINAW, ST. CLARE, ST. JOSEPH, SANILAC, SCHOOLCRAFT, SHIAWASSEE, TUSCOLA, VAN BUREN AND WEXFORD COUNTIES

	Rates	Fringes
Power equipment operators: (AIRPORT, BRIDGE & HIGHWAY CONSTRUCTION)		
AREA 1		
GROUP 1	$ 31.16	22.35
GROUP 2	$ 24.43	22.35
GROUP 3	$ 25.73	22.35
GROUP 4	$ 23.87	22.35
GROUP 5	$ 23.70	22.35
AREA 2		
GROUP 1	$ 31.16	22.35
GROUP 2	$ 24.28	22.35
GROUP 3	$ 25.58	22.35
GROUP 4	$ 23.72	22.35
GROUP 5	$ 23.40	22.35

POWER EQUIPMENT OPERATOR CLASSIFICATIONS

GROUP 1: Asphalt plant operator; Crane operator (does not include work on bridge construction projects when the crane operator is erecting structural components); Dragline operator; Shovel operator; Locomotive operator; Paver operator (5 bags or more); Elevating grader operator; Pile driving operator; Roller operator (asphalt); Blade grader operator; Trenching machine operator (ladder or wheel type); Auto-grader; Slip form paver; Self-propelled or tractor-drawn scraper; Conveyor loader operator (Euclid type); Endloader operator (1 yd. capacity and over); Bulldozer; Hoisting engineer; Tractor operator; Finishing machine operator (asphalt); Mechanic; Pump operator (6-in. discharge or over, gas, diesel powered or generator of 300 amp. or larger); Shouldering or gravel distributing machine

operator (self- propelled); Backhoe (with over 3/8 yd. bucket); Side boom tractor (type D-4 or equivalent or larger); Tube finisher (slip form paving); Gradall (and similar type machine); Asphalt paver (self- propelled); Asphalt planer (self-propelled); Batch plant (concrete-central mix); Slurry machine (asphalt); Concrete pump (3 in. and over); Roto-mill; Swinging boom truck (over 12 ton capacity); Hydro demolisher (water blaster); Farm-type tractor with attached pan

GROUP 2: Screening plant operator; Washing plant operator; Crusher operator; Backhoe (with 3/8 yd. bucket or less); Side boom tractor (smaller than D-4 type or equivalent); Sweeper (Wayne type and similar equipment); Vacuum truck operator; Batch plant (concrete dry batch)

GROUP 3: Grease Truck

GROUP 4: Air compressor operator (600 cu. ft. per min or more); Air compressor operator (two or more, less than 600 cfm); Wagon drill operator; Concrete breaker; Tractor operator (farm type with attachment)

GROUP 5: Boiler fire tender; Oiler; Fire tender; Trencher (service); Flexplane operator; Cleftplane operator; Grader operator (self-propelled fine-grade or form (concrete)); Finishing machine operator (concrete); Boom or winch hoist truck operator; Endloader operator (under 1 yd. capacity); Roller operator (other than asphalt); Curing equipment operator (self-propelled); Concrete saw operator (40 h.p. or over); Power bin operator; Plant drier operator (asphalt); Vibratory compaction equipment operator (6 ft. wide or over); Guard post driver operator (power driven); All mulching equipment; Stump remover; Concrete pump (under 3-in.); Mesh installer (self- propelled); Tractor operator (farm type); End dump; Skid steer

---

ENGI0324-007 05/01/2015

ALGER, BARAGA, CHIPPEWA, DELTA, DICKINSON, GOGEBIC, HOUGHTON, IRON, KEWEENAW, LUCE, MACKINAC MARQUETTE, MENOMINEE, ONTONAGON AND SCHOOLCRAFT COUNTIES:

	Rates	Fringes
OPERATOR: Power Equipment (Steel Erection)		
Compressor, welder and forklift	$ 25.21	22.05
Crane operator, main boom & jib 120' or longer	$ 29.96	22.05
Crane operator, main boom & jib 140' or longer	$ 29.21	22.05
Crane operator, main boom & jib 220' or longer	$ 29.46	22.05
Mechanic with truck and tools	$ 29.96	22.05
Oiler and fireman	$ 23.91	22.05

Regular operator.....$ 28.46 22.05

ENGI0324-008 10/01/2015

ALCONA, ALGER, ALLEGAN, ALPENA, ANTRIM, ARENAC, BARAGA, BARRY, BAY, BENZIE, BERRIEN, BRANCH, CALHOUN, CASS, CHARLEVOIX, CHEBOYGAN, CHIPPEWA, CLARE, CLINTON, CRAWFORD, DELTA, DICKINSON, EATON, EMMET, GENESEE, GLADWIN, GOGEBIC, GRAND TRAVERSE, GRATIOT, HILLSDALE, HOUGHTON, HURON, INGHAM, IONIA, IOSCO, IRON, ISABELLA, JACKSON, KALAMAZOO, KALKASKA, KENT, KEWEENAW, LAKE, LAPEER, LEELANAU, LENAWEE, LIVINGSTON, LUCE, MACKINAC, MACOMB, MANISTEE, MARQUETTE, MASON, MECOSTA, MENOMINEE, MIDLAND, MISSAUKEE, MONTCALM, MONTMORENCY, MONROE, MUSKEGON, NEWAYGO, OAKLAND, OCEANA, OGEMAW, ONTONAGON, OSCEOLA, OSCODA, OTSEGO, OTTAWA, PRESQUE ISLE, ROSCOMMON, SAGINAW, ST. CLARE, ST. JOSEPH, SANILAC, SCHOOLCRAFT, SHIAWASSEE, TUSCOLA, VAN BUREN, WASHTENAW, WAYNE AND WEXFORD COUNTIES

	Rates	Fringes
OPERATOR: Power Equipment (Sewer Relining)		
GROUP 1	$ 30.70	12.93
GROUP 2	$ 29.17	12.93

SEWER RELINING CLASSIFICATIONS

GROUP 1: Operation of audio-visual closed circuit TV system, including remote in-ground cutter and other equipment used in connection with the CCTV system

GROUP 2: Operation of hot water heaters and circulation systems, water jetters and vacuum and mechanical debris removal systems

---

ENGI0325-012 05/01/2015

AREA 1: MACOMB, MONROE, OAKLAND, ST. CLAIR, WASHTENAW AND WAYNE COUNTIES

AREA 2: ALCONA, ALGER, ALLEGAN, ALPENA, ANTRIM, ARENAC, BARAGA, BARRY, BAY, BENZIE, BERRIEN, BRANCH, CALHOUN, CASS, CHARLEVOIX, CHEBOYGAN, CHIPPEWA, CLARE, CLINTON, CRAWFORD, DELTA, DICKINSON, EATON, EMMET, GENESEE, GLADWIN, GOGEBIC, GRAND TRAVERSE, GRATIOT, HILLSDALE, HOUGHTON, HURON, INGHAM, IONIA, IOSCO, IRON, ISABELLA, JACKSON, KALAMAZOO, KALKASKA, KENT, KEWEENAW, LAKE, LAPEER, LEELANAU, LENAWEE, LIVINGSTON LUCE, MACKINAC, MANISTEE, MARQUETTE, MASON, MECOSTA, MENOMINEE, MIDLAND, MISSAUKEE, MONTCALM, MONTMORENCY, MUSKEGON, NEWAYGO, OCEANA, OGEMAW, ONTONAGON, OSCEOLA, OSCODA, OTSEGO, OTTAWA, PRESQUE ISLE, ROSCOMMON, SAGINAW, ST. JOSEPH, SANILAC, SCHOOLCRAFT, SHIAWASSEE, TUSCOLA, VAN BUREN AND WEXFORD COUNTIES

	Rates	Fringes
Power equipment operators - gas distribution and duct		

installation work:

AREA 1		
GROUP 1	$ 28.73	22.30
GROUP 2	$ 28.60	22.30
GROUP 3	$ 27.48	22.30
GROUP 4	$ 26.90	22.30
AREA 2		
GROUP 1	$ 27.82	22.30
GROUP 2-A	$ 27.72	22.30
GROUP 2-B	$ 27.50	22.30
GROUP 3	$ 26.72	22.30
GROUP 4	$ 26.22	22.30

SCOPE OF WORK: The construction, installation, treating and reconditioning of pipelines transporting gas vapors within cities, towns, subdivisions, suburban areas, or within private property boundaries, up to and including private meter settings of private industrial, governmental or other premises, more commonly referred to as "distribution work," starting from the first metering station, connection, similar or related facility, of the main or cross country pipeline and including duct installation.

AREA 1:

GROUP 1: Backhoe, crane, grader, mechanic, dozer (D-6 equivalent or larger), side boom (D-4 equivalent or larger), trencher(except service), endloader (2 yd. capacity or greater).
GROUP 2: Dozer (less than D-6 equivalent), endloader (under 2 yd. capacity), side boom (under D-4 capacity), backfiller, pumps (1 or 2 of 6-inch discharge or greater), boom truck (with powered boom), tractor (wheel type other than backhoe or front endloader).

GROUP 3: Tamper (self-propelled), boom truck (with non-powered boom), concrete saw (20 hp or larger), pumps (2 to 4 under 6-inch discharge), compressor (2 or more or when one is used continuously into the second day) and trencher(service).

GROUP 4: Oiler, hydraulic pipe pushing machine, grease person and hydrostatic testing operator.

AREA 2:

GROUP 1: Mechanic, crane (over 1/2 yd. capacity), backhoe (over 1/2 yd. capacity), grader (Caterpillar 12 equivalent or larger)

GROUP 2-A: Trencher(except service), backhoe (1/2 yd. capacity or less)

GROUP 2-B: Crane (1/2 yd. capacity or less), compressor (2 or more), dozer (D-4 equivalent or larger), endloader (1 yd. capacity or larger), pump (1 or 2 six-inch or larger), side boom (D-4 equivalent or larger)

GROUP 3: Backfiller, boom truck (powered), concrete saw (20

hp or larger), dozer (less than D-4 equivalent), endloader (under 1 yd. capacity), farm tractor (with attachments), pump (2 - 4 under six-inch capacity), side boom tractor(less than D-4 equivalent), tamper (self-propelled), trencher service and grader maintenance

GROUP 4: Oiler, grease person and hydrostatic testing operator

---

IRON0008-007 05/01/2015

ALGER, BARAGA, CHIPPEWA, DELTA, DICKINSON, GOGEBIC, HOUGHTON, IRON, KEWEENAW, LUCE, MACKINAC MARQUETTE, MENOMINEE, ONTONAGON AND SCHOOLCRAFT COUNTIES:

	Rates	Fringes
Ironworker - pre-engineered metal building erector	$ 23.70	6.95
IRONWORKER		
General contracts $10,000,000 or greater	$ 26.52	24.35
General contracts less than $10,000,000	$ 23.11	24.35

Paid Holidays: New Year's Day, Memorial Day, July 4th, Labor Day, Thanksgiving Day & Christmas Day.

IRON0025-002 06/01/2015

ALCONA, ALPENA, ARENAC, BAY, CHEBOYGAN, CLARE, CLINTON, CRAWFORD, GENESEE, GLADWIN, GRATIOT, HURON, INGHAM, IOSCO, ISABELLA, JACKSON, LAPEER, LIVINGSTON, MACOMB, MIDLAND, MONTMORENCY, OAKLAND, OGEMAW, OSCODA, OTSEGO, PRESQUE ISLE, ROSCOMMON, SAGINAW, SANILAC, SHIAWASSEE, ST. CLAIR, TUSCOLA, WASHTENAW AND WAYNE COUNTIES:

	Rates	Fringes
Ironworker - pre-engineered metal building erector		
Alcona, Alpena, Arenac, Cheboygan, Clare, Clinton, Crawford, Gladwin, Gratiot, Huron, Ingham, Iosco, Isabella, Jackson, Lapeer, Livingston (west of Burkhardt Road), Montmorency, Ogemaw, Oscoda, Otsego, Presque Isle, Roscommon, Sanilac, Shiawassee, Tuscola & Washtenaw (west of U.S. 23)	$ 22.17	20.13
Bay, Genesee, Lapeer, Livingston (east of Burkhardt Road), Macomb, Midland, Oakland, Saginaw,		

```
     St. Clair, The University
     of Michigan, Washtenaw
     (east of U.S. 23) & Wayne...$ 23.39            21.13
IRONWORKER
     Ornamental and Structural...$ 33.78            27.84
     Reinforcing.................$ 28.30            24.60
-----------------------------------------------------------------
 IRON0055-005 07/01/2013

LENAWEE AND MONROE COUNTIES:

                                  Rates          Fringes

IRONWORKER
     Pre-engineered metal
     buildings...................$ 23.59            19.35
     All other work..............$ 28.32            19.35
-----------------------------------------------------------------
 IRON0292-003 06/01/2015

BERRIEN AND CASS COUNTIES:

                                  Rates          Fringes

IRONWORKER (Including
pre-engineered metal building
erector)........................$ 28.31            20.00
-----------------------------------------------------------------
 IRON0340-001 06/01/2015

ALLEGAN, ANTRIM, BARRY, BENZIE, BRANCH, CALHOUN, CHARLEVOIX,
EATON, EMMET, GRAND TRAVERSE, HILLSDALE, IONIA, KALAMAZOO,
KALKASKA, KENT, LAKE, LEELANAU, MANISTEE, MASON, MECOSTA,
MISSAUKEE, MONTCALM, MUSKEGON, NEWAYGO, OCEANA, OSCEOLA,
OTTAWA, ST. JOSEPH, VAN BUREN AND WEXFORD COUNTIES:


                                  Rates          Fringes

IRONWORKER (Including
pre-engineered metal building
erector)........................$ 21.68            24.37
-----------------------------------------------------------------
 LABO0005-006 10/01/2014

                                  Rates          Fringes

Laborers - hazardous waste
abatement: (ALCONA, ALPENA,
ANTRIM, BENZIE, CHARLEVOIX,
CHEBOYGAN, CRAWFORD, EMMET,
GRAND TRAVERSE, IOSCO,
KALKASKA, LEELANAU,
MISSAUKEE, MONTMORENCY,
OSCODA, OTSEGO, PRESQUE ISLE
AND WEXFORD COUNTIES - Zone
10)
     Levels A, B or C............$ 17.45            12.75
     Work performed in
     conjunction with site
```

preparation not requiring
the use of personal
protective equipment;
Also, Level D.....$ 16.45 12.75
Laborers - hazardous waste
abatement: (ALGER, BARAGA,
CHIPPEWA, DELTA, DICKINSON,
GOGEBIC, HOUGHTON, IRON,
KEWEENAW, LUCE, MACKINAC,
MARQUETTE, MENOMINEE,
ONTONAGON AND SCHOOLCRAFT
COUNTIES - Zone 11)
Levels A, B or C.....$ 20.91 12.78
Work performed in
conjunction with site
preparation not requiring
the use of personal
protective equipment;
Also, Level D.....$ 19.91 12.78
Laborers - hazardous waste
abatement: (ALLEGAN, BARRY,
BERRIEN, BRANCH, CALHOUN,
CASS, IONIA COUNTY (except
the city of Portland);
KALAMAZOO, KENT, LAKE,
MANISTEE, MASON, MECOSTA,
MONTCALM, MUSKEGON, NEWAYGO,
OCEANA, OSCEOLA, OTTAWA, ST.
JOSEPH AND VAN BUREN COUNTIES
- Zone 9)
Levels A, B or C.....$ 19.99 12.75
Work performed in
conjunction with site
preparation not requiring
the use of personal
protective equipment;
Also, Level D.....$ 18.99 12.75
Laborers - hazardous waste
abatement: (ARENAC, BAY,
CLARE, GLADWIN, GRATIOT,
HURON, ISABELLA, MIDLAND,
OGEMAW, ROSCOMMON, SAGINAW
AND TUSCOLA COUNTIES - Zone 8)
Levels A, B or C.....$ 20.02 12.75
Work performed in
conjunction with site
preparation not requiring
the use of personal
protective equipment;
Also, Level D.....$ 19.02 12.75
Laborers - hazardous waste
abatement: (CLINTON, EATON
AND INGHAM COUNTIES; IONIA
COUNTY (City of Portland);
LIVINGSTON COUNTY (west of
Oak Grove Rd., including the
City of Howell) - Zone 6)
Levels A, B or C.....$ 23.29 12.75
Work performed in
conjunction with site

```
     preparation not requiring
     the use of personal
     protective equipment;
     Also, Level D...............$ 22.29            12.75
Laborers - hazardous waste
abatement: (GENESEE, LAPEER
AND SHIAWASSEE COUNTIES -
Zone 7)
     Levels A, B or C............$ 23.40            12.79
     Work performed in
     conjunction with site
     preparation not requiring
     the use of personal
     protective equipment;
     Also, Level D...............$ 22.40            12.79
Laborers - hazardous waste
abatement: (HILLSDALE,
JACKSON AND LENAWEE COUNTIES
- Zone 4)
     Levels A, B or C............$ 30.00            14.09
     Work performed in
     conjunction with site
     preparation not requiring
     the use of personal
     protective equipment;
     Also, Level D...............$ 29.00            14.09
Laborers - hazardous waste
abatement: (LIVINGSTON COUNTY
(east of Oak Grove Rd. and
south of M-59, excluding the
city of Howell); AND
WASHTENAW COUNTY - Zone 3)
     Levels A, B or C............$ 29.32            13.85
     Work performed in
     conjunction with site
     preparation not requiring
     the use of personal
     protective equipment;
     Also, Level D...............$ 28.32            13.85
Laborers - hazardous waste
abatement: (MACOMB AND WAYNE
COUNTIES - Zone 1)
     Levels A, B or C............$ 27.94            16.55
     Work performed in
     conjunction with site
     preparation not requiring
     the use of personal
     protective equipment;
     Also, Level D...............$ 26.94            16.55
Laborers - hazardous waste
abatement: (MONROE COUNTY -
Zone 4)
     Levels A, B or C............$ 30.00            14.09
     Work performed in
     conjunction with site
     preparation not requiring
     the use of personal
     protective equipment;
     Also, Level D...............$ 29.00            14.09
Laborers - hazardous waste
```

abatement: (OAKLAND COUNTY
and the Northeast portion of
LIVINGSTON COUNTY bordered by
Oak Grove Road on the West
and M-59 on the South - Zone
2)
Level A, B, C.....$ 27.94 16.55
Work performed in
conjunction with site
preparation not requiring
the use of personal
protective equipment;
Also, Level D.....$ 26.94 16.55
Laborers - hazardous waste
abatement: (SANILAC AND ST.
CLAIR COUNTIES - Zone 5)
Levels A, B or C.....$ 24.97 15.19
Work performed in
conjunction with site
preparation not requiring
the use of personal
protective equipment;
Also, Level D.....$ 23.97 15.19

LABO0259-001 09/01/2015

AREA 1: MACOMB, OAKLAND AND WAYNE COUNTIES
AREA 2: ALCONA, ALGER, ALLEGAN, ALPENA, ANTRIM, ARENAC, BARAGA, BARRY, BAY, BENZIE, BERRIEN, BRANCH, CALHOUN, CASS, CHARLEVOIX, CHEBOYGAN, CHIPPEWA, CLARE, CLINTON, CRAWFORD, DELTA, DICKINSON, EATON, EMMET, GENESEE, GLADWIN, GOGEBIC, GRAND TRAVERSE, GRATIOT, HILLSDALE, HOUGHTON, HURON, INGHAM, IONIA, IOSCO, IRON, ISABELLA, JACKSON, KALAMAZOO, KALKASKA, KENT, KEWEENAW, LAKE, LAPEER, LEELANAU, LENAWEE, LIVINGSTON, LUCE, MACKINAC, MANISTEE, MARQUETTE, MASON, MECOSTA, MENOMINEE, MIDLAND, MISSAUKEE, MONROE, MONTCALM, MONTMORENCY, MUSKEGON, NEWAYGO, OCEANA, OGEMAW, ONTONAGON, OSCEOLA, OSCODA, OTSEGO, OTTAWA, PRESQUE ISLE, ROSCOMMON, SAGINAW, ST. CLARE, ST. JOSEPH, SANILAC, SCHOOLCRAFT, SHIAWASSEE, TUSCOLA, VAN BUREN, WASHTENAW AND WEXFORD COUNTIES

	Rates	Fringes
Laborers - tunnel, shaft and caisson:		
AREA 1		
GROUP 1	$ 21.57	16.68
GROUP 2	$ 21.68	16.68
GROUP 3	$ 21.74	16.68
GROUP 4	$ 21.92	16.68
GROUP 5	$ 22.17	16.68
GROUP 6	$ 22.50	16.68
GROUP 7	$ 15.78	16.68
AREA 2		
GROUP 1	$ 23.10	12.75
GROUP 2	$ 23.19	12.75
GROUP 3	$ 23.29	12.75
GROUP 4	$ 23.45	12.75
GROUP 5	$ 23.71	12.75

GROUP 6.....$ 24.02 12.75
GROUP 7.....$ 16.29 12.75

SCOPE OF WORK: Tunnel, shaft and caisson work of every type and description and all operations incidental thereto, including, but not limited to, shafts and tunnels for sewers, water, subways, transportation, diversion, sewerage, caverns, shelters, aquafers, reservoirs, missile silos and steel sheeting for underground construction.

TUNNEL LABORER CLASSIFICATIONS

GROUP 1: Tunnel, shaft and caisson laborer, dump, shanty, hog house tender, testing (on gas) and watchman

GROUP 2: Manhole, headwall, catch basin builder, bricklayer tender, mortar machine and material mixer

GROUP 3: Air tool operator (jackhammer, bush hammer and grinder), first bottom, second bottom, cage tender, car pusher, carrier, concrete, concrete form, concrete repair, cement invert laborer, cement finisher, concrete shoveler, conveyor, floor, gasoline and electric tool operator, gunite, grout operator, welder, heading dinky person, inside lock tender, pea gravel operator, pump, outside lock tender, scaffold, top signal person, switch person, track, tugger, utility person, vibrator, winch operator, pipe jacking, wagon drill and air track operator and concrete saw operator (under 40 h.p.)

GROUP 4: Tunnel, shaft and caisson mucker, bracer, liner plate, long haul dinky driver and well point

GROUP 5: Tunnel, shaft and caisson miner, drill runner, key board operator, power knife operator, reinforced steel or mesh (e.g. wire mesh, steel mats, dowel bars, etc.)

GROUP 6: Dynamite and powder

GROUP 7: Restoration laborer, seeding, sodding, planting, cutting, mulching and top soil grading; and the restoration of property such as replacing mailboxes, wood chips, planter boxes, flagstones, etc.

LABO0334-001 09/01/2015

	Rates	Fringes
Laborers - open cut:		
ZONE 1 - MACOMB, OAKLAND AND WAYNE COUNTIES:		
GROUP 1	$ 21.42	16.68
GROUP 2	$ 21.53	16.68
GROUP 3	$ 21.58	16.68
GROUP 4	$ 21.66	16.68
GROUP 5	$ 21.72	16.68
GROUP 6	$ 19.17	16.68
GROUP 7	$ 15.79	16.68
ZONE 2 - LIVINGSTON COUNTY		

(east of M-151 (Oak Grove
Rd.)); MONROE AND
WASHTENAW COUNTIES:
GROUP 1.....$ 22.75 12.75
GROUP 2.....$ 22.86 12.75
GROUP 3.....$ 22.98 12.75
GROUP 4.....$ 23.05 12.75
GROUP 5.....$ 23.20 12.75
GROUP 6.....$ 20.50 12.75
GROUP 7.....$ 17.14 12.75
ZONE 3 - CLINTON, EATON,
GENESEE, HILLSDALE AND
INGHAM COUNTIES; IONIA
COUNTY (City of Portland);
JACKSON, LAPEER AND
LENAWEE COUNTIES;
LIVINGSTON COUNTY (west of
M-151 Oak Grove Rd.);
SANILAC, ST. CLAIR AND
SHIAWASSEE COUNTIES:
GROUP 1.....$ 20.94 12.75
GROUP 2.....$ 21.08 12.75
GROUP 3.....$ 21.20 12.75
GROUP 4.....$ 21.25 12.75
GROUP 5.....$ 21.39 12.75
GROUP 6.....$ 18.69 12.75
GROUP 7.....$ 15.84 12.75
ZONE 4 - ALCONA, ALLEGAN,
ALPENA, ANTRIM, ARENAC,
BARRY, BAY, BENZIE,
BERRIEN, BRANCH,
CALHOUN, CASS, CHARLEVOIX,
CHEBOYGAN, CLARE,
CRAWFORD, EMMET,
GLADWIN, GRAND TRAVERSE,
GRATIOT AND HURON
COUNTIES; IONIA COUNTY
(EXCEPT THE CITY OF
PORTLAND); IOSCO,
ISABELLA, KALAMAZOO,
KALKASKA, KENT,
LAKE,LEELANAU, MANISTEE,
MASON, MECOSTA, MIDLAND,
MISSAUKEE, MONTCALM,
MONTMORENCY, MUSKEGON,
NEWAYGO, OCEANA, OGEMAW,
OSCEOLA, OSCODA, OTSEGO,
OTTAWA, PRESQUE ISLE,
ROSCOMMON, SAGINAW, ST.
JOSEPH, TUSCOLA, VAN BUREN
AND WEXFORD COUNTIES:
GROUP 1.....$ 19.95 12.75
GROUP 2.....$ 20.08 12.75
GROUP 3.....$ 20.19 12.75
GROUP 4.....$ 20.26 12.75
GROUP 5.....$ 20.38 12.75
GROUP 6.....$ 17.60 12.75
GROUP 7.....$ 15.94 12.75
ZONE 5 - ALGER, BARAGA,
CHIPPEWA, DELTA,

DICKINSON, GOGEBIC,
HOUGHTON, IRON,
KEWEENAW, LUCE, MACKINAC,
MARQUETTE, MENOMINEE,
ONTONAGON AND SCHOOLCRAFT
COUNTIES:

GROUP 1	$ 20.26	12.75
GROUP 2	$ 20.40	12.75
GROUP 3	$ 20.53	12.75
GROUP 4	$ 20.58	12.75
GROUP 5	$ 20.63	12.75
GROUP 6	$ 18.01	12.75
GROUP 7	$ 16.12	12.75

SCOPE OF WORK:

Open cut construction work shall be construed to mean work which requires the excavation of earth including industrial, commercial and residential building site excavation and preparation, land balancing, demolition and removal of concrete and underground appurtenances, grading, paving, sewers, utilities and improvements; retention, oxidation, flocculation and irrigation facilities, and also including but not limited to underground piping, conduits, steel sheeting for underground construction, and all work incidental thereto, and general excavation. For all areas except the Upper Peninsula, open cut construction work shall also be construed to mean waterfront work, piers, docks, seawalls, breakwalls, marinas and all incidental work. Open cut construction work shall not include any structural modifications, alterations, additions and repairs to buildings, or highway work, including roads, streets, bridge construction and parking lots or steel erection work and excavation for the building itself and back filling inside of and within 5 ft. of the building and foundations, footings and piers for the building. Open cut construction work shall not include any work covered under Tunnel, Shaft and Caisson work.

OPEN CUT LABORER CLASSIFICATIONS

GROUP 1: Construction laborer

GROUP 2: Mortar and material mixer, concrete form person, signal person, well point person, manhole, headwall and catch basin builder, headwall, seawall, breakwall and dock builder

GROUP 3: Air, gasoline and electric tool operator, vibrator operator, driller, pump person, tar kettle operator, bracer, rodder, reinforced steel or mesh person (e.g., wire mesh, steel mats, dowel bars, etc.), welder, pipe jacking and boring person, wagon drill and air track operator and concrete saw operator (under 40 h.p.), windlass and tugger person and directional boring person

GROUP 4: Trench or excavating grade person

GROUP 5: Pipe layer (including crock, metal pipe, multi-plate or other conduits)

GROUP 6: Grouting man, audio-visual television operations and all other operations in connection with closed circuit television inspection, pipe cleaning and pipe relining work and the installation and repair of water service pipe and appurtenances

GROUP 7: Restoration laborer, seeding, sodding, planting, cutting, mulching and top soil grading; and the restoration of property such as replacing mailboxes, wood chips, planter boxes, flagstones, etc.

LABO0465-001 06/01/2015

LABORER: Highway, Bridge and Airport Construction

AREA 1: GENESEE, MACOMB, MONROE, OAKLAND, WASHTENAW AND WAYNE COUNTIES

AREA 2: ALLEGAN, BARRY, BAY, BERRIEN, BRANCH, CALHOUN, CASS, CLINTON, EATON, GRATIOT, HILLSDALE, HURON, INGHAM, JACKSON, KALAMAZOO, LAPEER, LENAWEE, LIVINGSTON, MIDLAND, MUSKEGON, SAGINAW, SANILAC, SHIAWASSEE, ST. CLAIR, ST. JOSEPH, TUSCOLA AND VAN BUREN COUNTIES

AREA 3: ALCONA, ALPENA, ANTRIM, ARENAC, BENZIE, CHARLEVOIX, CHEBOYGAN, CLARE, CRAWFORD, EMMET, GLADWIN, GRAND TRAVERSE, IONIA, IOSCO, ISABELLA, KALKASKA, KENT, LAKE, LEELANAU, MANISTEE, MASON, MECOSTA, MISSAUKEE, MONTCALM, MONTMORENCY, NEWAYGO, OCEANA, OGEMAW, OSCEOLA, OSCODA, OTSEGO, OTTAWA, PRESQUE ISLE, ROSCOMMON AND WEXFORD COUNTIES

AREA 4: ALGER, BARAGA, CHIPPEWA, DELTA, DICKINSON, GOGEBIC, HOUGHTON, IRON, KEWEENAW, LUCE, MACKINAC, MARQUETTE, MENOMINEE, ONTONAGON AND SCHOOLCRAFT COUNTIES

	Rates	Fringes
LABORER (AREA 1)		
GROUP 1	$ 25.06	13.00
GROUP 2	$ 25.19	13.00
GROUP 3	$ 25.37	13.00
GROUP 4	$ 25.45	13.00
GROUP 5	$ 25.66	13.00
GROUP 6	$ 25.96	13.00
LABORER (AREA 2)		
GROUP 1	$ 23.06	12.95
GROUP 2	$ 23.26	12.95
GROUP 3	$ 23.50	12.95
GROUP 4	$ 23.85	12.95
GROUP 5	$ 23.72	12.95
GROUP 6	$ 24.06	12.95
LABORER (AREA 3)		
GROUP 1	$ 22.31	12.95
GROUP 2	$ 22.52	12.95
GROUP 3	$ 22.81	12.95
GROUP 4	$ 23.25	12.95
GROUP 5	$ 22.87	12.95

```
     GROUP 6.....................$ 23.30            12.95
LABORER (AREA 4)
     GROUP 1.....................$ 22.31            12.95
     GROUP 2.....................$ 22.52            12.95
     GROUP 3.....................$ 22.81            12.95
     GROUP 4.....................$ 23.25            12.95
     GROUP 5.....................$ 22.87            12.95
     GROUP 6.....................$ 23.30            12.95

LABORER CLASSIFICATIONS

  GROUP 1: Asphalt shoveler or loader; asphalt plant misc.;
  burlap person; yard person; dumper (wagon, truck, etc.);
  joint filling laborer; miscellaneous laborer; unskilled
  laborer; sprinkler laborer; form setting laborer; form
  stripper; pavement reinforcing; handling and placing (e.g.,
  wire mesh, steel mats, dowel bars); mason's tender or
  bricklayer's tender on manholes; manhole builder;
  headwalls, etc.; waterproofing,(other than buildings) seal
  coating and slurry mix, shoring, underpinning; pressure
  grouting; bridge pin and hanger removal; material recycling
  laborer; horizontal paver laborer (brick, concrete, clay,
  stone and asphalt); ground stabilization and modification
  laborer; grouting; waterblasting; top person; railroad
  track and trestle laborer; carpenters' tender; guard rail
  builders' tender; earth retention barrier and wall and
  M.S.E. wall installer's tender; highway and median
  installer's tender(including sound, retaining, and crash
  barriers); fence erector's tender; asphalt raker tender;
  sign installer; remote control operated equipment.

  GROUP 2: Mixer operator (less than 5 sacks); air or electric
  tool operator (jackhammer, etc.); spreader; boxperson
  (asphalt, stone, gravel); concrete paddler; power chain saw
  operator; paving batch truck dumper; tunnel mucker (highway
  work only); concrete saw (under 40 h.p.) and dry pack
  machine; roto-mill grounds person.

  GROUP 3: Tunnel miner (highway work only); finishers tenders;
  guard rail builders; highway and median barrier installer;
  earth retention barrier and wall and M.S.E. wall
  installer's (including sound, retaining and crash
  barriers); fence erector; bottom person; powder person;
  wagon drill and air track operator; diamond and core
  drills; grade checker; certified welders; curb and side
  rail setter's tender.

GROUP 4: Asphalt raker

GROUP 5: Pipe layers, oxy-gun

  GROUP 6: Line-form setter for curb or pavement; asphalt
  screed checker/screw man on asphalt paving machines.

-------------------------------------------------------------------
 LABO1076-005 04/01/2015

MICHIGAN STATEWIDE

                                    Rates          Fringes
```

LABORER (DISTRIBUTION WORK)

Zone 1	$ 19.77	12.75
Zone 2	$ 18.15	12.75
Zone 3	$ 16.38	12.75
Zone 4	$ 15.75	12.75
Zone 5	$ 15.75	12.75

DISTRIBUTION WORK - The construction, installation, treating and reconditioning of distribution pipelines transporting coal, oil, gas or other similar materials, vapors or liquids, including pipelines within private property boundaries, up to and including the meter settings on residential, commercial, industrial, institutional, private and public structures. All work covering pumping stations and tank farms not covered by the Building Trades Agreement. Other distribution lines with the exception of sewer, water and cable television are included.

Underground Duct Layer Pay: $.40 per hour above the base pay rate.

Zone 1 - Macomb, Oakland and Wayne
Zone 2 - Monroe and Washtenaw
Zone 3 - Bay, Genesee, Lapeer, Midland, Saginaw, Sanilac, Shiawassee and St. Clair
Zone 4 - Alger, Baraga, Chippewa, Delta, Dickinson, Gogebic, Houghton, Iron, Keweenaw, Luce, Mackinac, Marquette, Menominee, Ontonagon and Schoolcraft
Zone 5 - Remaining Counties in Michigan

PAIN0022-002 07/01/2008

HILLSDALE, JACKSON AND LENAWEE COUNTIES; LIVINGSTON COUNTY (east of the eastern city limits of Howell, not including the city of Howell, north to the Genesee County line and south to the Washtenaw County line); MACOMB, MONROE, OAKLAND, WASHTENAW AND WAYNE COUNTIES:

	Rates	Fringes
PAINTER	$ 25.06	14.75

FOOTNOTES: For all spray work and journeyman rigging for spray work, also blowing off, $0.80 per hour additional (applies only to workers doing rigging for spray work on off the floor work. Does not include setting up or moving rigging on floor surfaces, nor does it apply to workers engaged in covering up or tending spray equipment. For all sandblasting and spray work performed on highway bridges, overpasses, tanks or steel, $0.80 per hour additional. For all brushing, cleaning and other preparatory work (other than spraying or steeplejack work) at scaffold heights of fifty (50) feet from the ground or higher, $0.50 per hour additional. For all preparatorial work and painting performed on open steel under forty (40) feet when no scaffolding is involved, $0.50 per hour additional. For all swing stage work-window jacks and window belts-exterior and

interior, $0.50 per hour additional. For all spray work and sandblaster work to a scaffold height of forty (40) feet above the floor level, $0.80 per hour additional. For all preparatorial work and painting on all highway bridges or overpasses up to forty (40) feet in height, $0.50 per hour additional. For all steeplejack work performed where the elevation is forty (40) feet or more, $1.25 per hour additional.

PAIN0312-001 06/12/2014

EXCLUDES: ALLEGAN COUNTY (Townships of Dorr, Fillmore, Heath, Hopkins, Laketown, Leighton, Manlius, Monterey, Overisel, Salem, Saugatuck and Wayland); INCLUDES: Barry, Berrien, Branch, Calhoun, Cass, Hillsdale, Kalamazoo, St. Joseph, Van Buren

	Rates	Fringes
PAINTER		
Brush and roller	$ 21.75	11.94
Spray, Sandblast, Sign Painting	$ 22.75	11.94

PAIN0845-003 05/21/2014

CLINTON COUNTY; EATON COUNTY (does not include the townships of Bellevue and Olivet); INGHAM COUNTY; IONIA COUNTY (east of Hwy. M 66); LIVINGSTON COUNTY (west of the eastern city limits of Howell, including the city of Howell, north to the Genesee County line and south to the Washtenaw County line); AND SHIAWASSEE COUNTY (Townships of Bennington, Laingsbury and Perry):

	Rates	Fringes
PAINTER	$ 21.89	11.85

PAIN0845-015 05/21/2014

MUSKEGON COUNTY; NEWAYGO COUNTY (except the Townships of Barton, Big Prairie, Brooks, Croton, Ensley, Everett, Goodwell, Grant, Home, Monroe, Norwich and Wilcox); OCEANA COUNTY; OTTAWA COUNTY (except the townships of Allendale, Blendone, Chester, Georgetown, Holland, Jamestown, Olive, Park, Polkton, Port Sheldon, Tallmadge, Wright and Zeeland):

	Rates	Fringes
PAINTER	$ 21.89	11.85

PAIN0845-018 05/21/2014

ALLEGAN COUNTY (Townships of Dorr, Fillmore, Heath, Hopkins, Laketown, Leighton, Manlius, Monterey, Overisel, Salem, Saugatuck and Wayland); IONIA COUNTY (west of Hwy. M-66); KENT,

MECOSTA AND MONTCALM COUNTIES; NEWAYGO COUNTY (Townships of Barton, Big Prairie, Brooks, Croton, Ensley, Everett, Goodwell, Grant, Home, Monroe, Norwich and Wilcox); OSCEOLA COUNTY (south of Hwy. #10); OTTAWA COUNTY (Townships of Allendale, Blendone, Chester, Georgetown, Holland, Jamestown, Olive, Park, Polkton, Port Sheldon, Tallmadge, Wright and Zeeland):

	Rates	Fringes
PAINTER	$ 21.89	11.85

FOOTNOTES: Lead abatement work: $1.00 per hour additional.

PAIN1011-003 06/05/2014

ALGER, BARAGA, CHIPPEWA, DELTA, DICKINSON, GOGEBIC, HOUGHTON, IRON, KEWEENAW, LUCE, MACKINAC, MARQUETTE, MENOMINEE, ONTONAGON AND SCHOOLCRAFT COUNTIES:

	Rates	Fringes
PAINTER	$ 24.15	10.52

FOOTNOTES: High pay (bridges, overpasses, watertower): 30 to 80 ft.: $.65 per hour additional. 80 ft. and over: $1.30 per hour additional.

PAIN1474-002 06/01/2010

HURON COUNTY; LAPEER COUNTY (east of Hwy. M-53); ST. CLAIR, SANILAC AND TUSCOLA COUNTIES:

	Rates	Fringes
PAINTER	$ 23.79	12.02

FOOTNOTES: Lead abatement work: $1.00 per hour additional. Work with any hazardous material: $1.00 per hour additional. Sandblasting, steam cleaning and acid cleaning: $1.00 per hour additional. Ladder work at or above 40 ft., scaffold work at or above 40 ft., swing stage, boatswain chair, window jacks and all work performed over a falling height of 40 ft.: $1.00 per hour additional. Spray gun work, pick pullers and those handling needles, blowing off by air pressure, and any person rigging (setting up and moving off the ground): $1.00 per hour additional. Steeplejack, tanks, gas holders, stacks, flag poles, radio towers and beacons, power line towers, bridges, etc.: $1.00 per hour additional, paid from the ground up.

PAIN1803-003 12/01/2015

ALCONA, ALPENA, ANTRIM, ARENAC, BAY, BENZIE, CHARLEVOIX, CHEBOYGAN, CLARE, CRAWFORD, EMMET, GLADWIN, GRAND TRAVERSE, GRATIOT, IOSCO, ISABELLA, KALKASKA, LAKE, LEELANAU, MANISTEE,

MASON, MIDLAND, MISSAUKEE, MONTMORENCY AND OGEMAW COUNTIES; OSCEOLA COUNTY (north of Hwy. #10); OSCODA, OTSEGO, PRESQUE ISLE, ROSCOMMON, SAGINAW AND WEXFORD COUNTIES:

	Rates	Fringes
PAINTER		
Work performed on water, bridges over water or moving traffic, radio and powerline towers, elevated tanks, steeples, smoke stacks over 40 ft. of falling heights, recovery of lead-based paints and any work associated with industrial plants, except maintenance of industrial plants	$ 24.50	13.25
All other work, including maintenance of industrial plant	$ 23.08	13.25

FOOTNOTES: Spray painting, sandblasting, blowdown associated with spraying and blasting, water blasting and work involving a swing stage, boatswain chair or spider: $1.00 per hour additional. All work performed inside tanks, vessels, tank trailers, railroad cars, sewers, smoke stacks, boilers or other spaces having limited egress not including buildings, opentop tanks, pits, etc.: $1.25 per hour additional.

PLAS0514-001 06/01/2014

ZONE 1: GENESEE, LIVINGSTON, MACOMB, MONROE, OAKLAND, SAGINAW, WASHTENAW AND WAYNE COUNTIES

ZONE 2: ALCONA, ALGER, ALLEGAN, ALPENA, ANTRIM, ARENAC, BARAGA, BARRY, BAY, BENZIE, BERRIEN, BRANCH, CALHOUN, CASS, CHARLEVOIX, CHEBOYGAN, CHIPPEWA, CLARE, CLINTON, CRAWFORD, DELTA, DICKINSON, EATON, EMMET, GLADWIN, GOGEBIC, GRAND TRAVERSE, GRATIOT, HILLSDALE, HOUGHTON, HURON, INGHAM, IONIA, IOSCO, IRON, ISABELLA, JACKSON, KALAMAZOO, KALKASKA, KENT, KEWEENAW, LAKE, LAPEER, LEELANAU, LENAWEE, LUCE, MACKINAC, MANISTEE, MARQUETTE, MASON, MECOSTA, MENOMINEE, MIDLAND, MISSAUKEE, MONTCALM, MONTMORENCY, MUSKEGON, NEWAYGO, OCEANA, OGEMAW, ONTONAGON, OSCEOLA, OSCODA, OTSEGO, OTTAWA, PRESQUE ISLE, ROSCOMMON, SANILAC, SCHOOLCRAFT, SHIAWASSEE, ST. CLAIR, ST. JOSEPH, TUSCOLA, VAN BUREN AND WEXFORD COUNTIES

	Rates	Fringes
CEMENT MASON/CONCRETE FINISHER		
ZONE 1	$ 29.59	12.59
ZONE 2	$ 28.29	12.59

---

* PLUM0190-003 05/01/2015

ALCONA, ALGER, ALLEGAN, ALPENA, ANTRIM, ARENAC, BARAGA, BARRY, BAY, BENZIE, BERRIEN, BRANCH, CALHOUN, CASS, CHARLEVOIX, CHEBOYGAN, CHIPPEWA, CLARE, CLINTON, CRAWFORD, DELTA, DICKINSON, EATON, EMMET, GENESEE, GLADWIN, GOGEBIC, GRAND TRAVERSE, GRATIOT, HILLSDALE, HOUGHTON, HURON, INGHAM, IONIA, IOSCO, IRON, ISABELLA, JACKSON, KALAMAZOO, KALKASKA, KENT, KEWEENAW, LAKE, LAPEER, LEELANAU, LENAWEE, LIVINGSTON, LUCE, MACKINAC, MACOMB, MANISTEE, MARQUETTE, MASON, MECOSTA, MENOMINEE, MIDLAND, MISSAUKEE, MONTCALM, MONTMORENCY, MONROE, MUSKEGON, NEWAYGO, OAKLAND, OCEANA, OGEMAW, ONTONAGON, OSCEOLA, OSCODA, OTSEGO, OTTAWA, PRESQUE ISLE, ROSCOMMON, SAGINAW, ST. CLARE, ST. JOSEPH, SANILAC, SCHOOLCRAFT, SHIAWASSEE, TUSCOLA, VAN BUREN, WASHTENAW, WAYNE AND WEXFORD COUNTIES

	Rates	Fringes
Plumber/Pipefitter - gas distribution pipeline:		
Welding in conjunction with gas distribution pipeline work	$ 33.03	20.19
All other work:	$ 24.19	12.28

TEAM0007-004 06/01/2015

AREA 1: ALCONA, ALGER, ALLEGAN, ALPENA, ANTRIM, ARENAC, BARAGA, BARRY, BAY, BENZIE, BERRIEN, BRANCH, CALHOUN, CASS, CHARLEVOIX, CHEBOYGAN, CHIPPEWA, CLARE, CLINTON, CRAWFORD, DELTA, DICKINSON, EATON, EMMET, GLADWIN, GOGEBIC, GRAND TRAVERSE, GRATIOT, HILLSDALE, HOUGHTON, HURON, INGHAM, IONIA, IOSCO, IRON, ISABELLA, JACKSON, KALAMAZOO, KALKASKA, KENT, KEWEENAW, LAKE, LAPEER, LEELANAU, LENAWEE, LUCE, MACKINAC, MANISTEE, MARQUETTE, MASON, MECOSTA, MENOMINEE, MIDLAND, MISSAUKEE, MONTCALM, MONTMORENCY, MUSKEGON, NEWAYGO, OCEANA, OGEMAW, ONTONAGON, OSCEOLA, OSCODA, OTSEGO, OTTAWA, PRESQUE ISLE, ROSCOMMON, SAGINAW, SANILAC, SCHOOLCRAFT, SHIAWASSEE, ST. CLAIR, ST. JOSEPH, TUSCOLA, VAN BUREN AND WEXFORD COUNTIES

AREA 2: GENESEE, LIVINGSTON, MACOMB, MONROE, OAKLAND, WASHTENAW AND WAYNE COUNTIES

	Rates	Fringes
TRUCK DRIVER		
AREA 1		
Euclids, double bottoms and lowboys	$ 25.05	.50 + a+b
Trucks under 8 cu. yds	$ 24.80	.50 + a+b
Trucks, 8 cu. yds. and over	$ 24.90	.50 + a+b
AREA 2		
Euclids, double bottomms and lowboys	$ 24.895	.50 + a+b
Euclids, double bottoms and lowboys	$ 25.15	.50 + a+b
Trucks under 8 cu. yds	$ 24.90	.50 + a+b

```
      Trucks, 8 cu. yds. and
      over.......................$ 25.00        .50 + a+b

Footnote:
a. $419.45 per week
b. $59.50 daily
-----------------------------------------------------------------
 TEAM0247-004 06/01/2004

AREA 1: ALCONA, ALGER, ALLEGAN, ALPENA, ANTRIM, ARENAC, BARAGA,
BARRY, BAY, BENZIE, BERRIEN, BRANCH, CALHOUN, CASS, CHARLEVOIX,
CHEBOYGAN, CHIPPEWA, CLARE, CLINTON, CRAWFORD, DELTA,
DICKINSON, EATON, EMMET, GLADWIN, GOGEBIC, GRAND TRAVERSE,
GRATIOT, HILLSDALE, HOUGHTON, HURON, INGHAM,  IONIA, IOSCO,
IRON, ISABELLA, JACKSON, KALAMAZOO, KALKASKA, KENT, KEWEENAW,
LAKE, LAPEER, LEELANAU, LENAWEE, LUCE, MACKINAC, MANISTEE,
MARQUETTE, MASON, MECOSTA, MENOMINEE, MIDLAND, MISSAUKEE,
MONTCALM, MONTMORENCY, MUSKEGON, NEWAYGO, OCEANA, OGEMAW,
ONTONAGON, OSCEOLA, OSCODA, OTSEGO, OTTAWA, PRESQUE ISLE,
ROSCOMMON, SANILAC, SCHOOLCRAFT, SHIAWASSEE, SAGINAW, ST.
CLAIR, ST. JOSEPH, TUSCOLA, VAN BUREN  AND WEXFORD COUNTIES

AREA 2: GENESEE, LIVINGSTON,  MACOMB, MONROE, OAKLAND,
WASHTENAW AND WAYNE COUNTIES


                                  Rates          Fringes

Sign Installer
     AREA 1
      GROUP 1....................$ 20.18          .15 + a
      GROUP 2....................$ 19.93          .15 + a
     AREA 2
      GROUP 1....................$ 21.73          .15 + a
      GROUP 2....................$ 21.48          .15 + a

FOOTNOTE:

a. $132.70 per week, plus $17.80 per day.


SIGN INSTALLER CLASSIFICATIONS:

  GROUP 1: performs all necessary labor and uses all tools
  required to construct and set concrete forms required in
  the installation of highway and street signs

  GROUP 2: performs all miscellaneous labor, uses all hand and
  power tools, and operates all other equipment, mobile or
  otherwise, required for the installation of highway and
  street signs

-----------------------------------------------------------------
 TEAM0247-010 04/01/2015

AREA 1: LAPEER AND SHIAWASSEE COUNTIES

AREA 2: GENESEE, MACOMB, MONROE, OAKLAND, ST. CLAIR, WASHTENAW
AND WAYNE COUNTIES
```

	Rates	Fringes
TRUCK DRIVER (Underground construction)		
AREA 1		
GROUP 1	$ 22.37405.90/wk+59.50/day	
GROUP 2	$ 22.46405.90/wk+59.50/day	
GROUP 3	$ 22.67405.90/wk+59.50/day	
AREA 2		
GROUP 1	$ 22.67405.90/wk+59.50/day	
GROUP 2	$ 22.81405.90/wk+59.50/day	
GROUP 3	$ 23.00405.90/wk+59.50/day	

PAID HOLIDAYS: New Year's Day, Memorial Day, Fourth of July, Labor Day, Thanksgiving Day and Christmas Day.

SCOPE OF WORK: Excavation, site preparation, land balancing, grading, sewers, utilities and improvements; also including but not limited to, tunnels, underground piping, retention, oxidation, flocculation facilities, conduits, general excavation and steel sheeting for underground construction. Underground construction work shall not include any structural modifications, alterations, additions and repairs to buildings or highway work, including roads, streets, bridge construction and parking lots or steel erection.

TRUCK DRIVER CLASSIFICATIONS

GROUP 1: Truck driver on all trucks (EXCEPT dump trucks of 8 cubic yards capacity or over, pole trailers, semis, low boys, Euclid, double bottom and fuel trucks)

GROUP 2: Truck driver on dump trucks of 8 cubic yards capacity or over, pole trailers, semis and fuel trucks

GROUP 3: Truck driver on low boy, Euclid and double bottom

SUMI2002-001 05/01/2002

	Rates	Fringes
Flag Person	$ 10.10	0.00
LINE PROTECTOR (ZONE 1: GENESEE, MACOMB, MONROE, OAKLAND, WASHTENAW AND WAYNE)	$ 18.98	12.17
LINE PROTECTOR (ZONE 2: STATEWIDE (EXCLUDING GENESEE, MACOMB, MONROE, OAKLAND, WASHTENAW AND WAYNE)	$ 17.14	12.17
Pavement Marking Machine (ZONE 1: GENESEE, MACOMB, MONROE, OAKLAND, WASHTENAW AND WAYNE COUNTIES)		
Group 1	$ 24.89	12.17

Pavement Marking Machine
(ZONE 1: GENESEE, MACOMB,
MONROE, OAKLAND, WASHTENAW
AND WAYNE)
Group 2.....$ 22.40 12.17

Pavement Marking Machine
(ZONE 2: STATEWIDE (EXCLUDING
GENESEE, MACOMB, MONROE,
OAKLAND, WASHTENAW AND WAYNE
COUNTIES)
Group 1.....$ 22.89 12.17

Pavement Marking Machine
(ZONE 2: STATEWIDE (EXCLUDING
GENESEE, MACOMB, MONROE,
OAKLAND, WASHTENAW AND WAYNE)
Group 2.....$ 20.60 12.17

WORK CLASSIFICATIONS:

PAVEMENT MARKER GROUP 1: Drives or operates a truck mounted striper, grinder, blaster, groover, or thermoplastic melter for the placement or removal of temporary or permanent pavement markings or markers.

PAVEMENT MARKER GROUP 2: Performs all functions involved for the placement or removal of temporary or permanent pavement markings or markers not covered by the classification of Pavement Marker Group 1 or Line Protector.

LINE PROTECTOR: Performs all operations for the protection or removal of temporary or permanent pavement markings or markers in a moving convoy operation not performed by the classification of Pavement Marker Group 1. A moving convoy operation is comprised of only Pavement Markers Group 1 and Line Protectors.

WELDERS - Receive rate prescribed for craft performing operation to which welding is incidental.

==========

Unlisted classifications needed for work not included within the scope of the classifications listed may be added after award only as provided in the labor standards contract clauses (29CFR 5.5 (a) (1) (ii)).

The body of each wage determination lists the classification and wage rates that have been found to be prevailing for the cited type(s) of construction in the area covered by the wage determination. The classifications are listed in alphabetical

order of "identifiers" that indicate whether the particular rate is a union rate (current union negotiated rate for local), a survey rate (weighted average rate) or a union average rate (weighted union average rate).

Union Rate Identifiers

A four letter classification abbreviation identifier enclosed in dotted lines beginning with characters other than "SU" or "UAVG" denotes that the union classification and rate were prevailing for that classification in the survey. Example: PLUM0198-005 07/01/2014. PLUM is an abbreviation identifier of the union which prevailed in the survey for this classification, which in this example would be Plumbers. 0198 indicates the local union number or district council number where applicable, i.e., Plumbers Local 0198. The next number, 005 in the example, is an internal number used in processing the wage determination. 07/01/2014 is the effective date of the most current negotiated rate, which in this example is July 1, 2014.

Union prevailing wage rates are updated to reflect all rate changes in the collective bargaining agreement (CBA) governing this classification and rate.

Survey Rate Identifiers

Classifications listed under the "SU" identifier indicate that no one rate prevailed for this classification in the survey and the published rate is derived by computing a weighted average rate based on all the rates reported in the survey for that classification. As this weighted average rate includes all rates reported in the survey, it may include both union and non-union rates. Example: SULA2012-007 5/13/2014. SU indicates the rates are survey rates based on a weighted average calculation of rates and are not majority rates. LA indicates the State of Louisiana. 2012 is the year of survey on which these classifications and rates are based. The next number, 007 in the example, is an internal number used in producing the wage determination. 5/13/2014 indicates the survey completion date for the classifications and rates under that identifier.

Survey wage rates are not updated and remain in effect until a new survey is conducted.

Union Average Rate Identifiers

Classification(s) listed under the UAVG identifier indicate that no single majority rate prevailed for those classifications; however, 100% of the data reported for the classifications was union data. EXAMPLE: UAVG-OH-0010 08/29/2014. UAVG indicates that the rate is a weighted union average rate. OH indicates the state. The next number, 0010 in the example, is an internal number used in producing the wage determination. 08/29/2014 indicates the survey completion date for the classifications and rates under that identifier.

A UAVG rate will be updated once a year, usually in January of each year, to reflect a weighted average of the current negotiated/CBA rate of the union locals from which the rate is

based.

WAGE DETERMINATION APPEALS PROCESS

1.) Has there been an initial decision in the matter? This can be:

* an existing published wage determination
* a survey underlying a wage determination
* a Wage and Hour Division letter setting forth a position on a wage determination matter
* a conformance (additional classification and rate) ruling

On survey related matters, initial contact, including requests for summaries of surveys, should be with the Wage and Hour Regional Office for the area in which the survey was conducted because those Regional Offices have responsibility for the Davis-Bacon survey program. If the response from this initial contact is not satisfactory, then the process described in 2.) and 3.) should be followed.

With regard to any other matter not yet ripe for the formal process described here, initial contact should be with the Branch of Construction Wage Determinations. Write to:

Branch of Construction Wage Determinations
Wage and Hour Division
U.S. Department of Labor
200 Constitution Avenue, N.W.
Washington, DC 20210

2.) If the answer to the question in 1.) is yes, then an interested party (those affected by the action) can request review and reconsideration from the Wage and Hour Administrator (See 29 CFR Part 1.8 and 29 CFR Part 7). Write to:

Wage and Hour Administrator
U.S. Department of Labor
200 Constitution Avenue, N.W.
Washington, DC 20210

The request should be accompanied by a full statement of the interested party's position and by any information (wage payment data, project description, area practice material, etc.) that the requestor considers relevant to the issue.

3.) If the decision of the Administrator is not favorable, an interested party may appeal directly to the Administrative Review Board (formerly the Wage Appeals Board). Write to:

Administrative Review Board
U.S. Department of Labor
200 Constitution Avenue, N.W.
Washington, DC 20210

4.) All decisions by the Administrative Review Board are final.

==========

END OF GENERAL DECISION

General Decision Number: MI160073 01/08/2016 MI73

Superseded General Decision Number: MI20150073

State: Michigan

Construction Type: Heavy

County: Van Buren County in Michigan.

Heavy, Includes Water, Sewer Lines and Excavation (Excludes Hazardous Waste Removal; Coal, Oil, Gas, Duct and other similar Pipeline Construction)

Note: Under Executive Order (EO) 13658, an hourly minimum wage of $10.15 for calendar year 2016 applies to all contracts subject to the Davis-Bacon Act for which the solicitation was issued on or after January 1, 2015. If this contract is covered by the EO, the contractor must pay all workers in any classification listed on this wage determination at least $10.15 (or the applicable wage rate listed on this wage determination, if it is higher) for all hours spent performing on the contract in calendar year 2016. The EO minimum wage rate will be adjusted annually. Additional information on contractor requirements and worker protections under the EO is available at www.dol.gov/whd/govcontracts.

Modification Number	Publication Date
0	01/08/2016

CARP0525-006 06/01/2015

	Rates	Fringes
CARPENTER, Includes Form Work....	$ 20.61	18.34

ELEC0131-006 06/02/2015

	Rates	Fringes
ELECTRICIAN.....	$ 30.55	14.55

---

* ENGI0325-018 09/01/2015

POWER EQUIPMENT OPERATORS: Underground Construction (Including Sewer)

	Rates	Fringes
POWER EQUIPMENT OPERATOR		
GROUP 1.....	$ 29.47	21.85
GROUP 2.....	$ 24.58	21.85
GROUP 3.....	$ 24.08	21.85
GROUP 4.....	$ 23.80	21.85

POWER EQUIPMENT OPERATOR CLASSIFICATIONS

GROUP 1: Boring Machine, Bulldozer, Crane, Grader/ Blade, Roller, Scraper, Trencher (over 8 ft. digging capacity)

GROUP 2: Trencher (8-ft digging capacity and smaller)

GROUP 3: Boom Truck (non-swinging, non- powered type boom)

GROUP 4: Broom/ Sweeper, Fork Truck, Tractor, Bobcat/ Skid Steer /Skid Loader

---

ENGI0326-010 06/01/2014

EXCLUDES UNDERGROUND CONSTRUCTION

	Rates	Fringes
OPERATOR: Power Equipment		
GROUP 1	$ 29.09	21.70
GROUP 2	$ 28.84	21.70
GROUP 3	$ 28.34	21.70
GROUP 4	$ 23.24	21.70
GROUP 5	$ 22.64	21.70
GROUP 6	$ 20.19	21.70

PAID HOLIDAYS: New Year's Day, Memorial Day, Fourth of July, Labor Day, Thanksgiving Day and Christmas Day.

POWER EQUIPMENT OPERATOR CLASSIFICATIONS

GROUP 1: Crane operator with main boom and jib 400', 300', or 220' or longer.

GROUP 2: Crane operator with main boom and jib 140' or longer, tower crane, gantry crane, whirley derrick

GROUP 3: Boring Machine; Bulldozer; Grader/Blade; Roller; Scraper; Tractor; Trencher; regular crane and stiff leg derrick

GROUP 4: Bobcat/Skid Loader; Broom/Sweeper; Fork Truck (over 20' lift)

GROUP 5: Boom truck (non-swinging)

GROUP 6: Fork Truck (20' lift and under for masonry work)

FOOTNOTES:

Crane operator with main boom and jib 300' or longer: $1.50 per hour above the group 1 rate.

Crane operator with main boom and jib 400' or longer: $3.00 per hour above the group 1 rate.

IRON0340-004 06/01/2015

	Rates	Fringes
IRONWORKER, STRUCTURAL AND REINFORCING	$ 21.68	24.37

LABO0334-011 09/01/2014

SCOPE OF WORK:
OPEN CUT CONSTRUCTION: Excavation of earth and sewer, utilities, and improvements, including underground piping/conduit (including inspection, cleaning, restoration, and relining)

	Rates	Fringes
LABORER		
(1) Common or General	$ 19.65	12.75
(2) Mason Tender-Cement/Concrete	$ 19.78	12.75
(4) Grade Checker	$ 19.96	12.75
(5) Pipelayer	$ 20.08	12.75

LABO0355-010 06/01/2015

EXCLUDES OPEN CUT CONSTRUCTION

	Rates	Fringes
LABORER		
Common or General; Grade Checker; Mason Tender - Cement/Concrete	$ 19.69	12.80
Pipelayer	$ 19.94	12.80

PAIN0312-014 06/12/2014

	Rates	Fringes
PAINTER		
Brush & Roller	$ 21.75	11.94
Spray	$ 22.75	11.94

PLAS0016-025 04/01/2014

	Rates	Fringes
CEMENT MASON/CONCRETE FINISHER		
Twps of Bloomingdale, Waverly, Paw Paw, Decatur, Porter, Antwerp, Almena & Pinegrove	$ 22.31	12.83
Twps of South Haven, Covert, Geneva, Bangor, Hartford, Keeler, Hamilton, Lawrence, Arlington & Columbia	$ 24.63	12.88

PLUM0357-011 06/01/2014

	Rates	Fringes
PLUMBER	$ 31.70	17.05

TEAM0007-011 06/01/2015

	Rates	Fringes
TRUCK DRIVER		
Lowboy/Semi-Trailer Truck	$ 25.05	.50 + a+b
Tractor Haul Truck	$ 24.80	.50 + a+b

FOOTNOTE:
a. $419.45 per week.
b. $59.50 daily.

SUMI2010-071 11/09/2010

	Rates	Fringes
LABORER: Landscape	$ 12.25	0.00
OPERATOR: Backhoe/Excavator	$ 19.09	2.48
OPERATOR: Loader	$ 19.19	6.00
TRUCK DRIVER: Dump Truck	$ 18.00	6.43
TRUCK DRIVER: Off the Road Truck	$ 20.82	3.69

WELDERS - Receive rate prescribed for craft performing operation to which welding is incidental.

==========

Unlisted classifications needed for work not included within the scope of the classifications listed may be added after award only as provided in the labor standards contract clauses (29CFR 5.5 (a) (1) (ii)).

The body of each wage determination lists the classification and wage rates that have been found to be prevailing for the cited type(s) of construction in the area covered by the wage determination. The classifications are listed in alphabetical order of "identifiers" that indicate whether the particular rate is a union rate (current union negotiated rate for local), a survey rate (weighted average rate) or a union average rate (weighted union average rate).

Union Rate Identifiers

A four letter classification abbreviation identifier enclosed in dotted lines beginning with characters other than "SU" or

"UAVG" denotes that the union classification and rate were prevailing for that classification in the survey. Example: PLUM0198-005 07/01/2014. PLUM is an abbreviation identifier of the union which prevailed in the survey for this classification, which in this example would be Plumbers. 0198 indicates the local union number or district council number where applicable, i.e., Plumbers Local 0198. The next number, 005 in the example, is an internal number used in processing the wage determination. 07/01/2014 is the effective date of the most current negotiated rate, which in this example is July 1, 2014.

Union prevailing wage rates are updated to reflect all rate changes in the collective bargaining agreement (CBA) governing this classification and rate.

Survey Rate Identifiers

Classifications listed under the "SU" identifier indicate that no one rate prevailed for this classification in the survey and the published rate is derived by computing a weighted average rate based on all the rates reported in the survey for that classification. As this weighted average rate includes all rates reported in the survey, it may include both union and non-union rates. Example: SULA2012-007 5/13/2014. SU indicates the rates are survey rates based on a weighted average calculation of rates and are not majority rates. LA indicates the State of Louisiana. 2012 is the year of survey on which these classifications and rates are based. The next number, 007 in the example, is an internal number used in producing the wage determination. 5/13/2014 indicates the survey completion date for the classifications and rates under that identifier.

Survey wage rates are not updated and remain in effect until a new survey is conducted.

Union Average Rate Identifiers

Classification(s) listed under the UAVG identifier indicate that no single majority rate prevailed for those classifications; however, 100% of the data reported for the classifications was union data. EXAMPLE: UAVG-OH-0010 08/29/2014. UAVG indicates that the rate is a weighted union average rate. OH indicates the state. The next number, 0010 in the example, is an internal number used in producing the wage determination. 08/29/2014 indicates the survey completion date for the classifications and rates under that identifier.

A UAVG rate will be updated once a year, usually in January of each year, to reflect a weighted average of the current negotiated/CBA rate of the union locals from which the rate is based.

WAGE DETERMINATION APPEALS PROCESS

1.) Has there been an initial decision in the matter? This can

be:

* an existing published wage determination
* a survey underlying a wage determination
* a Wage and Hour Division letter setting forth a position on a wage determination matter
* a conformance (additional classification and rate) ruling

On survey related matters, initial contact, including requests for summaries of surveys, should be with the Wage and Hour Regional Office for the area in which the survey was conducted because those Regional Offices have responsibility for the Davis-Bacon survey program. If the response from this initial contact is not satisfactory, then the process described in 2.) and 3.) should be followed.

With regard to any other matter not yet ripe for the formal process described here, initial contact should be with the Branch of Construction Wage Determinations. Write to:

Branch of Construction Wage Determinations
Wage and Hour Division
U.S. Department of Labor
200 Constitution Avenue, N.W.
Washington, DC 20210

2.) If the answer to the question in 1.) is yes, then an interested party (those affected by the action) can request review and reconsideration from the Wage and Hour Administrator (See 29 CFR Part 1.8 and 29 CFR Part 7). Write to:

Wage and Hour Administrator
U.S. Department of Labor
200 Constitution Avenue, N.W.
Washington, DC 20210

The request should be accompanied by a full statement of the interested party's position and by any information (wage payment data, project description, area practice material, etc.) that the requestor considers relevant to the issue.

3.) If the decision of the Administrator is not favorable, an interested party may appeal directly to the Administrative Review Board (formerly the Wage Appeals Board). Write to:

Administrative Review Board
U.S. Department of Labor
200 Constitution Avenue, N.W.
Washington, DC 20210

4.) All decisions by the Administrative Review Board are final.

==========

END OF GENERAL DECISION

General Decision Number: MI160099 02/26/2016 MI99

Superseded General Decision Number: MI20150099

State: Michigan

Construction Type: Building

County: Van Buren County in Michigan.

BUILDING CONSTRUCTION PROJECTS (does not include single family homes or apartments up to and including 4 stories).

Note: Under Executive Order (EO) 13658, an hourly minimum wage of $10.15 for calendar year 2016 applies to all contracts subject to the Davis-Bacon Act for which the solicitation was issued on or after January 1, 2015. If this contract is covered by the EO, the contractor must pay all workers in any classification listed on this wage determination at least $10.15 (or the applicable wage rate listed on this wage determination, if it is higher) for all hours spent performing on the contract in calendar year 2016. The EO minimum wage rate will be adjusted annually. Additional information on contractor requirements and worker protections under the EO is available at www.dol.gov/whd/govcontracts.

Modification Number	Publication Date
0	01/08/2016
1	02/26/2016

ASBE0047-002 07/01/2015

	Rates	Fringes
ASBESTOS WORKER/HEAT & FROST INSULATOR	$ 29.22	16.13

BOIL0169-001 01/01/2014

	Rates	Fringes
BOILERMAKER	$ 32.78	28.39

BRMI0009-031 08/01/2013

	Rates	Fringes
BRICKLAYER	$ 26.32	15.47
TILE FINISHER	$ 19.90	10.38
TILE SETTER	$ 21.27	11.58

CARP0525-013 06/01/2015

	Rates	Fringes
CARPENTER (Including Acoustical Ceiling Installation, Drywall		

Hanging, Form Work, Metal
Stud Installation & Scaffold
Builder).....$ 20.61 18.34

CARP1102-001 06/01/2013

	Rates	Fringes
MILLWRIGHT	$ 26.04	20.69

ELEC0131-001 06/02/2015

	Rates	Fringes
ELECTRICIAN		
Excludes Low Voltage Wiring	$ 30.55	14.55

ENGI0324-015 07/01/2014

	Rates	Fringes
OPERATOR: Power Equipment		
GROUP 1	$ 29.09	21.70
GROUP 2	$ 28.84	21.70
GROUP 3	$ 28.34	21.70
GROUP 4	$ 23.24	21.70
GROUP 5	$ 22.64	21.70
GROUP 6	$ 20.19	21.70
GROUP 7	$ 18.54	21.70

FOOTNOTES:

Crane operator with main boom and jib 300' or longer: $1.50 per hour above the group 1 rate.
Crane operator with main boom and jib 400' or longer: $3.00 per hour above the group 1 rate.

PAID HOLIDAYS: New Year's Day, Memorial Day, Fourth of July, Labor Day, Thanksgiving Day and Christmas Day.

POWER EQUIPMENT OPERATOR CLASSIFICATIONS

GROUP 1: Crane operator with main boom and jib 400', 300', or 220' or longer.

GROUP 2: Crane operator with main boom and jib 140' or longer, tower crane, gantry crane, whirley derrick

GROUP 3: Backhoe/Excavator/Trackhoe; Concrete Pump; Crane; Grader/Blade; Highlift; Hoist; Loader; Roller; Scraper; Stiff Leg Derrick; Trencher; stiff leg derrick

GROUP 4: Bobcat/Skid Loader; Broom/Sweeper; Fork Truck (over 20' lift)

GROUP 5: Boom Truck (non-swinging)

GROUP 6: Fork Truck (20' lift and under for masonry work)

GROUP 7: Oiler

IRON0340-002 06/01/2015

	Rates	Fringes
IRONWORKER, REINFORCING AND STRUCTURAL	$ 21.68	24.37

LABO0355-024 06/01/2015

	Rates	Fringes
LABORER		
Common or General; Grade Checker; Mason Tender - Cement/Concrete; Sandblaster	$ 19.69	12.80
Pipelayer	$ 19.94	12.80

PAIN0312-002 06/12/2015

	Rates	Fringes
PAINTER: Brush and Roller	$ 22.75	12.04
PAINTER: Drywall Finishing/Taping	$ 22.75	12.04
PAINTER: Spray	$ 23.95	12.04

PLAS0016-006 04/01/2014

	Rates	Fringes
CEMENT MASON/CONCRETE FINISHER		
Twps of Bloomingdale, Waverly, Paw Paw, Decatur, Porter, Antwerp, Almena & Pinegrove	$ 22.31	12.83
Twps of South Haven, Covert, Geneva, Bangor, Hartford, Keeler, Hamilton, Lawrence, Arlington & Columbia	$ 24.63	12.88

PLUM0357-007 06/01/2014

	Rates	Fringes
PIPEFITTER, Includes HVAC Pipe and Unit Installation	$ 31.70	17.05
PLUMBER, Excludes HVAC Pipe and Unit Installation	$ 31.70	17.05

ROOF0070-002 06/01/2013

	Rates	Fringes
ROOFER	$ 22.25	13.38

---

* SFMI0669-001 01/01/2016

	Rates	Fringes
SPRINKLER FITTER (Fire Sprinklers)	$ 32.52	18.02

SHEE0007-010 05/01/2014

	Rates	Fringes
SHEET METAL WORKER (HVAC Duct Installation Only)	$ 27.82	19.55

SUMI2011-024 02/01/2011

	Rates	Fringes
IRONWORKER, ORNAMENTAL	$ 18.48	7.93
LABORER: Landscape & Irrigation	$ 10.38	0.50
LABORER: Mason Tender - Brick	$ 20.29	7.22
OPERATOR: Bulldozer	$ 19.68	6.64
OPERATOR: Tractor	$ 19.10	8.48
SHEET METAL WORKER, Excludes HVAC Duct and Unit Installation	$ 24.56	7.20
TRUCK DRIVER, Includes Dump and Tandem Truck	$ 17.26	11.42
TRUCK DRIVER: Lowboy Truck	$ 14.50	0.44
TRUCK DRIVER: Tractor Haul Truck	$ 13.57	1.18

WELDERS - Receive rate prescribed for craft performing operation to which welding is incidental.

Unlisted classifications needed for work not included within the scope of the classifications listed may be added after award only as provided in the labor standards contract clauses (29CFR 5.5 (a) (1) (ii)).

The body of each wage determination lists the classification and wage rates that have been found to be prevailing for the cited type(s) of construction in the area covered by the wage determination. The classifications are listed in alphabetical

order of "identifiers" that indicate whether the particular rate is a union rate (current union negotiated rate for local), a survey rate (weighted average rate) or a union average rate (weighted union average rate).

Union Rate Identifiers

A four letter classification abbreviation identifier enclosed in dotted lines beginning with characters other than "SU" or "UAVG" denotes that the union classification and rate were prevailing for that classification in the survey. Example: PLUM0198-005 07/01/2014. PLUM is an abbreviation identifier of the union which prevailed in the survey for this classification, which in this example would be Plumbers. 0198 indicates the local union number or district council number where applicable, i.e., Plumbers Local 0198. The next number, 005 in the example, is an internal number used in processing the wage determination. 07/01/2014 is the effective date of the most current negotiated rate, which in this example is July 1, 2014.

Union prevailing wage rates are updated to reflect all rate changes in the collective bargaining agreement (CBA) governing this classification and rate.

Survey Rate Identifiers

Classifications listed under the "SU" identifier indicate that no one rate prevailed for this classification in the survey and the published rate is derived by computing a weighted average rate based on all the rates reported in the survey for that classification. As this weighted average rate includes all rates reported in the survey, it may include both union and non-union rates. Example: SULA2012-007 5/13/2014. SU indicates the rates are survey rates based on a weighted average calculation of rates and are not majority rates. LA indicates the State of Louisiana. 2012 is the year of survey on which these classifications and rates are based. The next number, 007 in the example, is an internal number used in producing the wage determination. 5/13/2014 indicates the survey completion date for the classifications and rates under that identifier.

Survey wage rates are not updated and remain in effect until a new survey is conducted.

Union Average Rate Identifiers

Classification(s) listed under the UAVG identifier indicate that no single majority rate prevailed for those classifications; however, 100% of the data reported for the classifications was union data. EXAMPLE: UAVG-OH-0010 08/29/2014. UAVG indicates that the rate is a weighted union average rate. OH indicates the state. The next number, 0010 in the example, is an internal number used in producing the wage determination. 08/29/2014 indicates the survey completion date for the classifications and rates under that identifier.

A UAVG rate will be updated once a year, usually in January of each year, to reflect a weighted average of the current negotiated/CBA rate of the union locals from which the rate is

based.

WAGE DETERMINATION APPEALS PROCESS

1.) Has there been an initial decision in the matter? This can be:

* an existing published wage determination
* a survey underlying a wage determination
* a Wage and Hour Division letter setting forth a position on a wage determination matter
* a conformance (additional classification and rate) ruling

On survey related matters, initial contact, including requests for summaries of surveys, should be with the Wage and Hour Regional Office for the area in which the survey was conducted because those Regional Offices have responsibility for the Davis-Bacon survey program. If the response from this initial contact is not satisfactory, then the process described in 2.) and 3.) should be followed.

With regard to any other matter not yet ripe for the formal process described here, initial contact should be with the Branch of Construction Wage Determinations. Write to:

Branch of Construction Wage Determinations
Wage and Hour Division
U.S. Department of Labor
200 Constitution Avenue, N.W.
Washington, DC 20210

2.) If the answer to the question in 1.) is yes, then an interested party (those affected by the action) can request review and reconsideration from the Wage and Hour Administrator (See 29 CFR Part 1.8 and 29 CFR Part 7). Write to:

Wage and Hour Administrator
U.S. Department of Labor
200 Constitution Avenue, N.W.
Washington, DC 20210

The request should be accompanied by a full statement of the interested party's position and by any information (wage payment data, project description, area practice material, etc.) that the requestor considers relevant to the issue.

3.) If the decision of the Administrator is not favorable, an interested party may appeal directly to the Administrative Review Board (formerly the Wage Appeals Board). Write to:

Administrative Review Board
U.S. Department of Labor
200 Constitution Avenue, N.W.
Washington, DC 20210

4.) All decisions by the Administrative Review Board are final.

==========

END OF GENERAL DECISION

29 CFR Part 5 – Labor Standards Provisions for Federally Assisted Projects

§ 5.5 Contract provisions and related matters.

(a) The Agency head shall cause or require the contracting officer to insert in full in any contract in excess of $2,000 which is entered into for the actual construction, alteration and/or repair, including painting and decorating, of a public building or public work, or building or work financed in whole or in part from Federal funds or in accordance with guarantees of a Federal agency or financed from funds obtained by pledge of any contract of a Federal agency to make a loan, grant or annual contribution (except where a different meaning is expressly indicated), and which is subject to the labor standards provisions of any of the acts listed in Sec. 5.1, the following clauses (or any modifications thereof to meet the particular needs of the agency, *Provided*, That such modifications are first approved by the Department of Labor):

(1) *Minimum wages*. (i) All laborers and mechanics employed or working upon the site of the work (or under the United States Housing Act of 1937 or under the Housing Act of 1949 in the construction or development of the project), will be paid unconditionally and not less often than once a week, and without subsequent deduction or rebate on any account (except such payroll deductions as are permitted by regulations issued by the Secretary of Labor under the Copeland Act (29 CFR part 3)), the full amount of wages and bona fide fringe benefits (or cash equivalents thereof) due at time of payment computed at rates not less than those contained in the wage determination of the Secretary of Labor which is attached hereto and made a part hereof, regardless of any contractual relationship which may be alleged to exist between the contractor and such laborers and mechanics.

Contributions made or costs reasonably anticipated for bona fide fringe benefits under section 1(b)(2) of the Davis-Bacon Act on behalf of laborers or mechanics are considered wages paid to such laborers or mechanics, subject to the provisions of paragraph (a)(1)(iv) of this section; also, regular contributions made or costs incurred for more than a weekly period (but not less often than quarterly) under plans, funds, or programs which cover the particular weekly period, are deemed to be constructively made or incurred during such weekly period. Such laborers and mechanics shall be paid the appropriate wage rate and fringe benefits on the wage determination for the classification of work actually performed, without regard to skill, except as provided in Sec. 5.5(a)(4). Laborers or mechanics performing work in more than one classification may be compensated at the rate specified for each classification for the time actually worked therein: Provided, That the employer's payroll records accurately set forth the time spent in each classification in which work is performed. The wage determination (including any additional classification and wage rates conformed under paragraph (a)(1)(ii) of this section) and the Davis-Bacon poster (WH-1321) shall be posted at all times by the contractor and its subcontractors at the site of the work in a prominent and accessible place where it can be easily seen by the workers.

(ii)(A) The contracting officer shall require that any class of laborers or mechanics, including helpers, which is not listed in the wage determination and which is to be employed under the contract shall be classified in conformance with the wage determination. The contracting officer shall approve an additional classification and wage rate and fringe benefits therefore only when the following criteria have been met:

(1) The work to be performed by the classification requested is not performed by a classification in the wage determination; and

(2) The classification is utilized in the area by the construction industry; and

(3) The proposed wage rate, including any bona fide fringe benefits, bears a reasonable relationship to the wage rates contained in the wage determination.

(B) If the contractor and the laborers and mechanics to be employed in the classification (if known), or their representatives, and the contracting officer agree on the classification and wage rate (including the amount designated for fringe benefits where appropriate), a report of the action taken shall be sent by the contracting officer to the Administrator of the Wage and Hour Division, Employment Standards Administration, U.S. Department of Labor, Washington, DC 20210. The Administrator, or an authorized representative, will approve, modify, or disapprove every additional classification action within 30 days of receipt and so advise the contracting officer or will notify the contracting officer within the 30-day period that additional time is necessary.

(C) In the event the contractor, the laborers or mechanics to be employed in the classification or their representatives, and the contracting officer do not agree on the proposed classification and wage rate (including the amount designated for fringe benefits, where appropriate), the contracting officer shall refer the questions, including the views of all interested parties and the recommendation of the contracting officer, to the Administrator for determination. The Administrator, or an authorized representative, will issue a determination within 30 days of receipt and so advise the contracting officer or will notify the contracting officer within the 30-day period that additional time is necessary.

(D) The wage rate (including fringe benefits where appropriate) determined pursuant to paragraphs (a)(1)(ii) (B) or (C) of this section, shall be paid to all workers performing work in the classification under this contract from the first day on which work is performed in the classification.

(iii) Whenever the minimum wage rate prescribed in the contract for a class of laborers or mechanics includes a fringe benefit which is not expressed as an hourly rate, the contractor shall either pay the benefit as stated in the wage determination or shall pay another bona fide fringe benefit or an hourly cash equivalent thereof.

(iv) If the contractor does not make payments to a trustee or other third person, the contractor may consider as part of the wages of any laborer or mechanic the amount of any costs reasonably anticipated in providing bona fide fringe benefits under a plan or program, Provided, That the Secretary of Labor has found, upon the written request of the contractor, that the applicable standards of the Davis-Bacon Act have been met. The Secretary of Labor may require the contractor to set aside in a separate account assets for the meeting of obligations under the plan or program.

(2) *Withholding*. The (write in name of Federal Agency or the loan or grant recipient) shall upon its own action or upon written request of an authorized representative of the Department of Labor withhold or cause to be withheld from the contractor under this contract or any other Federal contract with the same prime contractor, or any other federally-assisted contract subject to Davis-Bacon prevailing wage requirements, which is held by the same prime contractor, so much of the accrued payments or advances as may be considered necessary to pay laborers and mechanics, including apprentices, trainees, and helpers, employed by the contractor or any subcontractor the full amount of wages required by the contract. In the event of failure to pay any laborer or mechanic, including any apprentice, trainee, or helper, employed or working on the site of the work (or under the United States Housing Act of 1937 or under the Housing Act of

1949 in the construction or development of the project), all or part of the wages required by the contract, the (Agency) may, after written notice to the contractor, sponsor, applicant, or owner, take such action as may be necessary to cause the suspension of any further payment, advance, or guarantee of funds until such violations have ceased.

(3) *Payrolls and basic records*. (i) Payrolls and basic records relating thereto shall be maintained by the contractor during the course of the work and preserved for a period of three years thereafter for all laborers and mechanics working at the site of the work (or under the United States Housing Act of 1937, or under the Housing Act of 1949, in the construction or development of the project). Such records shall contain the name, address, and social security number of each such worker, his or her correct classification, hourly rates of wages paid (including rates of contributions or costs anticipated for bona fide fringe benefits or cash equivalents thereof of the types described in section 1(b)(2)(B) of the Davis-Bacon Act), daily and weekly number of hours worked, deductions made and actual wages paid. Whenever the Secretary of Labor has found under 29 CFR 5.5(a)(1)(iv) that the wages of any laborer or mechanic include the amount of any costs reasonably anticipated in providing benefits under a plan or program described in section 1(b)(2)(B) of the Davis-Bacon Act, the contractor shall maintain records which show that the commitment to provide such benefits is enforceable, that the plan or program is financially responsible, and that the plan or program has been communicated in writing to the laborers or mechanics affected, and records which show the costs anticipated or the actual cost incurred in providing such benefits. Contractors employing apprentices or trainees under approved programs shall maintain written evidence of the registration of apprenticeship programs and certification of trainee programs, the registration of the apprentices and trainees, and the ratios and wage rates prescribed in the applicable programs.

(ii)(A) The contractor shall submit weekly for each week in which any contract work is performed a copy of all payrolls to the (write in name of appropriate federal agency) if the agency is a party to the contract, but if the agency is not such a party, the contractor will submit the payrolls to the applicant, sponsor, or owner, as the case may be, for transmission to the (write in name of agency). The payrolls submitted shall set out accurately and completely all of the information required to be maintained under 29 CFR 5.5(a)(3)(i), except that full social security numbers and home addresses shall not be included on weekly transmittals. Instead the payrolls shall only need to include an individually identifying number for each employee (*e.g.*, the last four digits of the employee's social security number). The required weekly payroll information may be submitted in any form desired. Optional Form WH-347 is available for this purpose from the Wage and Hour Division Web site at *http://www.dol.gov/whd/forms/wh347.pdf* or its successor site. The prime contractor is responsible for the submission of copies of payrolls by all subcontractors. Contractors and subcontractors shall maintain the full social security number and current address of each covered worker, and shall provide them upon request to the (write in name of appropriate federal agency) if the agency is a party to the contract, but if the agency is not such a party, the contractor will submit them to the applicant, sponsor, or owner, as the case may be, for transmission to the (write in name of agency), the contractor, or the Wage and Hour Division of the Department of Labor for purposes of an investigation or audit of compliance with prevailing wage requirements. It is not a violation of this section for a prime contractor to require a subcontractor to provide addresses and social security numbers to the prime contractor for its own records, without weekly submission to the sponsoring government agency (or the applicant, sponsor, or owner).

(B) Each payroll submitted shall be accompanied by a ``Statement of Compliance,'' signed by the contractor or subcontractor or his or her agent who pays or supervises the payment of the persons employed under the contract and shall certify the following:

(1) That the payroll for the payroll period contains the information required to be provided under Sec. 5.5 (a)(3)(ii) of Regulations, 29 CFR part 5, the appropriate information is being maintained under Sec. 5.5 (a)(3)(i) of Regulations, 29 CFR part 5, and that such information is correct and complete;

(2) That each laborer or mechanic (including each helper, apprentice, and trainee) employed on the contract during the payroll period has been paid the full weekly wages earned, without rebate, either directly or indirectly, and that no deductions have been made either directly or indirectly from the full wages earned, other than permissible deductions as set forth in Regulations, 29 CFR part 3;

(3) That each laborer or mechanic has been paid not less than the applicable wage rates and fringe benefits or cash equivalents for the classification of work performed, as specified in the applicable wage determination incorporated into the contract.

(C) The weekly submission of a properly executed certification set forth on the reverse side of Optional Form WH-347 shall satisfy the requirement for submission of the ``Statement of Compliance'' required by paragraph (a)(3)(ii)(B) of this section.

(D) The falsification of any of the above certifications may subject the contractor or subcontractor to civil or criminal prosecution under section 1001 of title 18 and section 231 of title 31 of the United States Code.

(iii) The contractor or subcontractor shall make the records required under paragraph (a)(3)(i) of this section available for inspection, copying, or transcription by authorized representatives of the (write the name of the agency) or the Department of Labor, and shall permit such representatives to interview employees during working hours on the job. If the contractor or subcontractor fails to submit the required records or to make them available, the Federal agency may, after written notice to the contractor, sponsor, applicant, or owner, take such action as may be necessary to cause the suspension of any further payment, advance, or guarantee of funds. Furthermore, failure to submit the required records upon request or to make such records available may be grounds for debarment action pursuant to 29 CFR 5.12.

(4) *Apprentices and trainees*--(i) *Apprentices.* Apprentices will be permitted to work at less than the predetermined rate for the work they performed when they are employed pursuant to and individually registered in a bona fide apprenticeship program registered with the U.S. Department of Labor, Employment and Training Administration, Office of Apprenticeship Training, Employer and Labor Services, or with a State Apprenticeship Agency recognized by the Office, or if a person is employed in his or her first 90 days of probationary employment as an apprentice in such an apprenticeship program, who is not individually registered in the program, but who has been certified by the Office of Apprenticeship Training, Employer and Labor Services or a State Apprenticeship Agency (where appropriate) to be eligible for probationary employment as an apprentice. The allowable ratio of apprentices to journeymen on the job site in any craft classification shall not be greater than the ratio permitted to the contractor as to the entire work force under the registered program. Any worker listed on a payroll at an apprentice wage rate, who is not registered or otherwise employed as stated above, shall be paid not less than the applicable wage rate on the wage determination for the classification of work actually performed. In addition, any apprentice performing work on the job site in excess of the ratio permitted under the registered program shall be paid not less than the applicable wage rate on the wage determination for the work actually performed. Where a contractor is performing construction on a project in a locality other than that in which its

program is registered, the ratios and wage rates (expressed in percentages of the journeyman's hourly rate) specified in the contractor's or subcontractor's registered program shall be observed. Every apprentice must be paid at not less than the rate specified in the registered program for the apprentice's level of progress, expressed as a percentage of the journeymen hourly rate specified in the applicable wage determination. Apprentices shall be paid fringe benefits in accordance with the provisions of the apprenticeship program. If the apprenticeship program does not specify fringe benefits, apprentices must be paid the full amount of fringe benefits listed on the wage determination for the applicable classification. If the Administrator determines that a different practice prevails for the applicable apprentice classification, fringes shall be paid in accordance with that determination. In the event the Office of Apprenticeship Training, Employer and Labor Services, or a State Apprenticeship Agency recognized by the Office, withdraws approval of an apprenticeship program, the contractor will no longer be permitted to utilize apprentices at less than the applicable predetermined rate for the work performed until an acceptable program is approved.

(ii) *Trainees*. Except as provided in 29 CFR 5.16, trainees will not be permitted to work at less than the predetermined rate for the work performed unless they are employed pursuant to and individually registered in a program which has received prior approval, evidenced by formal certification by the U.S. Department of Labor, Employment and Training Administration. The ratio of trainees to journeymen on the job site shall not be greater than permitted under the plan approved by the Employment and Training Administration. Every trainee must be paid at not less than the rate specified in the approved program for the trainee's level of progress, expressed as a percentage of the journeyman hourly rate specified in the applicable wage determination. Trainees shall be paid fringe benefits in accordance with the provisions of the trainee program. If the trainee program does not mention fringe benefits, trainees shall be paid the full amount of fringe benefits listed on the wage determination unless the Administrator of the Wage and Hour Division determines that there is an apprenticeship program associated with the corresponding journeyman wage rate on the wage determination which provides for less than full fringe benefits for apprentices. Any employee listed on the payroll at a trainee rate who is not registered and participating in a training plan approved by the Employment and Training Administration shall be paid not less than the applicable wage rate on the wage determination for the classification of work actually performed. In addition, any trainee performing work on the job site in excess of the ratio permitted under the registered program shall be paid not less than the applicable wage rate on the wage determination for the work actually performed. In the event the Employment and Training Administration withdraws approval of a training program, the contractor will no longer be permitted to utilize trainees at less than the applicable predetermined rate for the work performed until an acceptable program is approved.

(iii) *Equal employment opportunity*. The utilization of apprentices, trainees and journeymen under this part shall be in conformity with the equal employment opportunity requirements of Executive Order 11246, as amended, and 29 CFR part 30.

(5) *Compliance with Copeland Act requirements*. The contractor shall comply with the requirements of 29 CFR part 3, which are incorporated by reference in this contract.

(6) *Subcontracts.* The contractor or subcontractor shall insert in any subcontracts the clauses contained in 29 CFR 5.5(a)(1) through (10) and such other clauses as the (write in the name of the Federal agency) may by appropriate instructions require, and also a clause requiring the subcontractors to include these clauses in any lower tier subcontracts. The prime contractor shall be responsible for the compliance by any subcontractor or lower tier subcontractor with all the contract clauses in 29 CFR 5.5.

(7) *Contract termination: debarment.* A breach of the contract clauses in 29 CFR 5.5 may be grounds for termination of the contract, and for debarment as a contractor and a subcontractor as provided in 29 CFR 5.12.

(8) *Compliance with Davis-Bacon and Related Act requirements*. All rulings and interpretations of the Davis-Bacon and Related Acts contained in 29 CFR parts 1, 3, and 5 are herein incorporated by reference in this contract.

(9) *Disputes concerning labor standards.* Disputes arising out of the labor standards provisions of this contract shall not be subject to the general disputes clause of this contract. Such disputes shall be resolved in accordance with the procedures of the Department of Labor set forth in 29 CFR parts 5, 6, and 7. Disputes within the meaning of this clause include disputes between the contractor (or any of its subcontractors) and the contracting agency, the U.S. Department of Labor, or the employees or their representatives.

(10) *Certification of eligibility.* (i) By entering into this contract, the contractor certifies that neither it (nor he or she) nor any person or firm who has an interest in the contractor's firm is a person or firm ineligible to be awarded Government contracts by virtue of section 3(a) of the Davis-Bacon Act or 29 CFR 5.12(a)(1).

(ii) No part of this contract shall be subcontracted to any person or firm ineligible for award of a Government contract by virtue of section 3(a) of the Davis-Bacon Act or 29 CFR 5.12(a)(1).

(iii) The penalty for making false statements is prescribed in the U.S. Criminal Code, 18 U.S.C. 1001.

(b) *Contract Work Hours and Safety Standards Act.* The Agency Head shall cause or require the contracting officer to insert the following clauses set forth in paragraphs (b)(1), (2), (3), and (4) of this section in full in any contract in an amount in excess of $100,000 and subject to the overtime provisions of the Contract Work Hours and Safety Standards Act. These clauses shall be inserted in addition to the clauses required by Sec. 5.5(a) or 4.6 of part 4 of this title. As used in this paragraph, the terms laborers and mechanics include watchmen and guards.

(1) *Overtime requirements*. No contractor or subcontractor contracting for any part of the contract work which may require or involve the employment of laborers or mechanics shall require or permit any such laborer or mechanic in any workweek in which he or she is employed on such work to work in excess of forty hours in such workweek unless such laborer or mechanic receives compensation at a rate not less than one and one-half times the basic rate of pay for all hours worked in excess of forty hours in such workweek.

(2) *Violation; liability for unpaid wages; liquidated damages.* In the event of any violation of the clause set forth in paragraph (b)(1) of this section the contractor and any subcontractor responsible there for shall be liable for the unpaid wages. In addition, such contractor and subcontractor shall be liable to the United States (in the case of work done under contract for the District of Columbia or a territory, to such District or to such territory), for liquidated damages. Such liquidated damages shall be computed with respect to each individual laborer or mechanic, including watchmen and guards, employed in violation of the clause set forth in paragraph (b)(1) of this section, in the sum of $10 for each calendar day on which such individual was required or permitted to work in excess of the standard workweek of forty hours without payment of the overtime wages required by the clause set forth in paragraph (b)(1) of this section.

(3) *Withholding for unpaid wages and liquidated damages*. The (write in the name of the Federal agency or the loan or grant recipient) shall upon its own action or upon written request of an authorized representative of the Department of Labor withhold or cause to be withheld, from any moneys payable on account of work performed by the contractor or subcontractor under any such contract or any other Federal contract with the same prime contractor, or any other federally-assisted contract subject to the Contract Work Hours and Safety Standards Act, which is held by the same prime contractor, such sums as may be determined to be necessary to satisfy any liabilities of such contractor or subcontractor for unpaid wages and liquidated damages as provided in the clause set forth in paragraph (b)(2) of this section.

(4) *Subcontracts.* The contractor or subcontractor shall insert in any subcontracts the clauses set forth in paragraph (b)(1) through (4) of this section and also a clause requiring the subcontractors to include these clauses in any lower tier subcontracts. The prime contractor shall be responsible for compliance by any subcontractor or lower tier subcontractor with the clauses set forth in paragraphs (b)(1) through (4) of this section.

(c) In addition to the clauses contained in paragraph (b), in any contract subject only to the Contract Work Hours and Safety Standards Act and not to any of the other statutes cited in Sec. 5.1, the Agency Head shall cause or require the contracting officer to insert a clause requiring that the contractor or subcontractor shall maintain payrolls and basic payroll records during the course of the work and shall preserve them for a period of three years from the completion of the contract for all laborers and mechanics, including guards and watchmen, working on the contract. Such records shall contain the name and address of each such employee, social security number, correct classifications, hourly rates of wages paid, daily and weekly number of hours worked, deductions made, and actual wages paid. Further, the Agency Head shall cause or require the contracting officer to insert in any such contract a clause providing that the records to be maintained under this paragraph shall be made available by the contractor or subcontractor for inspection, copying, or transcription by authorized representatives of the (write the name of agency) and the Department of Labor, and the contractor or subcontractor will permit such representatives to interview employees during working hours on the job.

Debarment Certification

The prime contractor must provide a completed **Certification Regarding Debarment, Suspension, and Other Responsibility Matters Form** with its bid or proposal package to the owner (Attachment 2).

Attachment 2

Certification Regarding Debarment, Suspension, and Other Responsibility Matters

Certification Regarding
Debarment, Suspension, and Other Responsibility Matters

The prospective participant certifies, to the best of its knowledge and belief, that it and its principals:

(1) Are not presently debarred, suspended, proposed for debarment, declared ineligible, or voluntarily excluded from participation in transactions under federal nonprocurement programs by any federal department or agency;

(2) Have not, within the three year period preceding the proposal, had one or more public transactions (federal, state, or local) terminated for cause or default; and

(3) Are not presently indicted or otherwise criminally or civilly charged by a government entity (federal, state, or local) and have not, within the three year period preceding the proposal, been convicted of or had a civil judgment rendered against it:

(a) For the commission of fraud or a criminal offense in connection with obtaining, attempting to obtain, or performing a public transaction (federal, state, or local) or a procurement contract under such a public transaction;

(b) For the violation of federal or state antitrust statutes, including those proscribing price fixing between competitors, the allocation of customers between competitors, or bid rigging; or

(c) For the commission of embezzlement, theft, forgery, bribery, falsification or destruction of records, making false statements, or receiving stolen property.

I understand that a false statement on this certification may be grounds for the rejection of this proposal or the termination of the award. In addition, under 18 U.S.C. §1001, a false statement may result in a fine of up to $10,000 or imprisonment for up to five years, or both.

_____
Name and Title of Authorized Representative

_____
Name of Participant Agency or Firm

_____
Signature of Authorized Representative Date

☐ I am unable to certify to the above statement. Attached is my explanation.

Disadvantaged Business Enterprises (DBE)

Prime contractors bidding on this project must follow, document, and maintain documentation of their Good Faith Efforts, as listed below, to ensure that Disadvantaged Business Enterprises (DBEs) have the opportunity to participate in the project by increasing DBE awareness of procurement efforts and outreach. Bidders must make the following Good Faith Efforts for any work that will be subcontracted.

1. Ensure DBEs are made aware of contracting opportunities to the fullest extent practicable through outreach and recruitment activities. Place DBEs on solicitation lists and solicit DBEs whenever they are potential sources.

2. Make information on forthcoming opportunities available to DBEs. Arrange time-frames for contracts and establish delivery schedules, where the requirements permit, in a way that encourages and facilitates participation by DBEs in the competitive process. Whenever possible, post solicitation for bids or proposals for a minimum of 30 calendar days before the bid or proposal closing date. The DBEs should be given a minimum of 5 days to respond to the posting.

3. Consider in the contracting process whether firms competing for large contracts can be subcontracted with DBEs. Divide total requirements, when economically feasible, into smaller tasks or quantities to permit maximum participation by DBEs in the competitive process.

4. Encourage contracting with a consortium of DBEs when a contract is too large for one DBE firm to handle individually.

5. Use the services and assistance of the Small Business Administration and the Minority Business Development Agency of the U.S. Department of Commerce.

Subsequent to compliance with the Good Faith Efforts, the following conditions also apply under the DBE requirements. Completed Good Faith Efforts Worksheets (Attachment 1), along with the required supporting documentation outlined in the instructions, must be submitted with your bid proposal. EPA form 6100-2 must also be provided at the pre-bid meeting. A copy of this form is available on the Forms and Guidance page of the Revolving Loan website.

1. The prime contractor must pay its subcontractor for work that has been satisfactorily completed no more than 30 days from the prime contractor's receipt of payment from the owner.

2. The prime contractor must notify the owner in writing prior to the termination of any DBE subcontractor for convenience by the prime contractor and employ the Good Faith Efforts if soliciting a replacement contractor.

3. If a DBE contractor fails to complete work under the subcontract for any reason, the prime contractor must employ the Good Faith Efforts if soliciting a replacement contractor.

4. The prime contractor must employ the Good Faith Efforts.

Attachment 1

Disadvantaged Business Enterprise (DBE) Utilization
GOOD FAITH EFFORTS WORKSHEET

Michigan Department of Environmental Quality
Office of Drinking Water and Municipal Assistance– Revolving Loan Section
Disadvantaged Business Enterprise (DBE) Utilization
State Revolving Fund/Drinking Water Revolving Fund
GOOD FAITH EFFORTS WORKSHEET

Bidder:_____

Subcontract Area of Work (one per worksheet:_____

Outreach Goal: Solicit a minimum of three (3) DBEs via email/letter/fax. It is recommended that various sources be used to locate the minimum number of DBEs. The Michigan Department of Transportation (MDOT) website and www.sam.gov registries may be two resources used to find a minimum of three DBEs.

List the DBEs contacted for the above area of work and complete the following information for each DBE.

Company Name	Type of Contact	Date of Contact	Price Quote Received	Accepted/ Rejected	Please Explain if Rejected
				☐ A ☐ R	
				☐ A ☐ R	
				☐ A ☐ R	
				☐ A ☐ R	
				☐ A ☐ R	
				☐ A ☐ R	

Explanation for Not Achieving a Minimum of Three Contacts; you may include a printout of the MDOT and www.sam.gov search results (attach extra sheets if necessary):

MITA DBE Posting Date (if applicable): _____
(attach a copy of the DBE advertisement)

Other Efforts (attach extra sheets if necessary):

Please include the completed worksheet and supporting documentation with the bid proposal.

Rev.3-2015

Rick Snyder, Governor DEQ Dan Wyant, Director

Authorized under Parts 53 & 54 of the Natural Resources and Environmental Protection Act, 1994 PA 451, as amended.
www.michigan.gov/deq

Michigan Department of Environmental Quality
Office of Drinking Water and Municipal Assistance– Revolving Loan Section
Disadvantaged Business Enterprise (DBE) Utilization
State Revolving Fund/Drinking Water Revolving Fund
GOOD FAITH EFFORTS WORKSHEET

Instructions to Bidders for the Completion of the Good Faith Efforts Worksheet

1. Separate worksheets must be provided for each area of work to be subcontracted out. This includes both major and minor subcontracts.

2. A minimum of three (3) DBEs must be contacted by a verifiable means of communication such as e-mail, letter, or fax for each area of work to be subcontracted out. Copies of the solicitation letters/e-mails and fax confirmation sheets must be provided with the worksheet.

3. If less that three (3) DBEs exist statewide for the area of work, then provide documentation that other DBE resources were consulted. This may include the MDOT and www.sam.gov registries and an advertisement is a publication. A printout of the website searched (conducted prior to the end of the bid period) must be submitted.

4. Posting solicitations for quotes/proposals from DBEs on the MITA website (www.mitadbe.com) is highly recommended to facilitate participation in the competitive process whenever possible. The solicitation needs to identify the project and the areas of work to be subcontracted out. A copy of the MITA DBE advertisement must be submitted with the Good Faith Efforts worksheet, if used, or a printout of the resulting quotes posted to the MITA website can be submitted with this form as supporting documentation.

5. If the area of work is so specialized that no DBEs exist, then an explanation is required to support that conclusion, including the documentation required in No. 3 above.

6. The date of the DBE contact must be identified, as it is important to document that the DBE solicitation was made during the bid period and that sufficient time was given for the DBE to return a quote.

7. Each DBE firm's price quote must be identified if one was received or N/A entered on the worksheet if a quote was not received. Copies of all quotes must be submitted with the worksheet.

8. If a quote was received, indicate if it was accepted or rejected. Justification for not accepting a quote and not using the DBE subcontractor must be provided.

9. Under Other Efforts, please indicate additional steps you have taken to obtain DBE contractors and provide the appropriate supporting documentation such as:
   - Follow-up e-mails, faxes, or letters.
   - Copies of announcements/postings in newspapers, trade publications, or minority media that target DBE firms.

Rev. 3-2015

Attachment 3

Frequently Asked Questions About Disadvantaged Business Enterprise (DBE) Solicitation

Disadvantaged Business Enterprise (DBE) Requirements Frequently Asked Questions Regarding Contractor Compliance

Q: What is the Good Faith Efforts Worksheet form and how is it to be completed?

A: This form captures efforts by the prime contractor to solicit DBEs for each area of work type that will be subcontracted out. A separate Good Faith Efforts Worksheet must be provided by the prime contractor for each area of work type to be subcontracted out. There are specific instructions that accompany this form that prescribe minimum efforts which bidders must make in order to be in compliance with the DBE requirements.

Q: Can non-certified DBEs be used?

A: While non-certified DBEs can be used, only DBEs, MBEs, and WBEs that are certified by EPA, SBA, or MDOT (or by tribal, state and local governments, as long as their standards for certification meet or exceed the standards in EPA policy) can be counted toward the fair share goal. Proof of certification by one of these recognized and approved agencies should be sought from each DBE.

Q: How does a DBE get certified?

A: Applications for certification under MDOT can be found at http://mdotjboss.state.mi.us/UCP/LearnHowServlet.

Applications for certification under EPA can be found on EPA's Small Business Programs website at http://www.epa.gov/osbp/dbe_firm.htm under Certification Forms.

Q: If a bidder follows the MDOT DBE requirements, will the bidder be in compliance with the SRF/DWRF DBE requirements?

A: No. Federally funded highway projects utilize DBE goals, which require that a certain percentage of work be performed by DBE subcontractors. For SRF/DWRF projects, there is no financial goal. However, there is a solicitation effort goal. Bidders must use Good Faith Efforts for each and every area of work to be subcontracted out to obtain DBEs. The bidders are not required to use DBEs if the quotes are higher than non-DBE subcontractors. **There is no required DBE participation percentage contract goal for the SRF/DWRF.** However, if the SRF/DWRF project is part of a joint project with MDOT, the project can be excluded from SRF/DWRF DBE requirements (i.e., the Good Faith Efforts Worksheet is not required) as it would be difficult to comply with both programs' requirements.

Q. Must the Good Faith Efforts Worksheet and supporting documentation be turned in with the bid proposals?

A: Yes. This is a requirement to document that the contractor has complied with the DBE requirements and the Good Faith Efforts. These compliance efforts must be done during the bidding phase and not after-the-fact. It is highly recommended that the need for these efforts and the submittal of the forms with the bid proposals be emphasized at the pre-bid meetings. Failure to show that the Good Faith Efforts were complied with during the bidding process can lead to a prime contractor being found non-responsive.

Q: Does EPA form 6100-2 need to be provided at the pre-bid meeting?

A: Yes. The form must be made available at the pre-bid meeting.

Q: What kinds of documentation should a contractor provide to document solicitation efforts?

A: Documentation can include fax confirmation sheets, copies of solicitation letters/e-mails, printouts of online solicitations, printouts of online search results, affidavits of publication in newspapers, etc.

Q: How much time will compliance with the Good Faith Efforts require in terms of structuring an adequate bidding period?

A: Due to the extent of the efforts required, a minimum of 30 calendar days is recommended between bid posting and bid opening to ensure adequate time for contractors to locate certified DBEs and solicit quotes.

Q: How does a contractor locate certified DBEs?

A: The Michigan Department of Transportation has a directory of all Michigan certified entities located at http://mdotjboss.state.mi.us/UCP/. Additionally, the federal System for Award Management (SAM) is another place to search and can be found at www.sam.gov. SAM contains information from the former Central Contractor Registration (CCR) database.

Q: If the bidder does not intend to subcontract any work, what forms, if any, must be provided with the bid proposal?

A: The bidder should complete the Good Faith Efforts Worksheet with a notation that no subcontracting will be done. However, if the bidder is awarded the contract and then decides to subcontract work at any point, then the Good Faith Efforts must be made to solicit DBEs.

Q: In the perfect world, the Good Faith Efforts Worksheet is required to be turned in with the proposal. What if no forms are turned in with the bid proposal or forms are blank or incomplete? Should this be cause to determine that the bidder is non-responsive?

A: While the Good Faith Efforts Worksheet is important, it is more critical to confirm that the contractor complied with the DBE requirements prior to bid opening. The owner should contact the bidder as soon as deficiencies are noted for a determination/documentation of efforts taken to comply with the DBE requirements. Immediate submittal of the completed forms will be acceptable provided the Good Faith Efforts were made and it is just a matter of transferring information to the forms.

Q: If the prime contractor is a DBE, does he have to solicit DBE subcontractors?

A: Yes, the DBE requirements still apply if the prime intends to subcontract work out. Good Faith Efforts must be used to solicit DBEs.

Q: If the area of work is one where there are less than three DBE contractors, how is the contractor to document this?

A: Copies of printouts from MDOT and SAM showing no DBEs and advertisements soliciting quotes for all subcontract areas, including the questionable areas, will be adequate if the dates on the printouts are prior to the bid or proposal closing date.

Appendix B
Materials Certification

American Iron and Steel Contract Language

The Contractor acknowledges to and for the benefit of the city of South Haven ("Purchaser") and the Michigan Department of Environmental Quality (the "State") that it understands the goods and services under this Agreement are being funded with monies made available by the State Revolving Fund and/or the Drinking Water Revolving Fund and such law contains provisions commonly known as "American Iron and Steel (AIS);" that requires all iron and steel products used in the project be produced in the United States ("AIS Requirements") including iron and steel provided by the Contractor pursuant to this Agreement. The Contractor hereby represents and warrants to and for the benefit of the Purchaser and the State that (a) the Contractor has reviewed and understands the AIS Requirements, (b) all iron and steel used in the project will be and/or have been produced in the United States in a manner that complies with the AIS Requirements, unless a waiver of the requirements is approved or the State made the determination in writing that the AIS Requirements do not apply to the project, and (c) the Contractor will provide any further verified information, certification or assurance of compliance with this paragraph, or information necessary to support a waiver of the AIS requirements, as may be requested by the Purchaser. Notwithstanding any other provision of this Agreement, any failure to comply with this paragraph by the Contractor shall permit the Purchaser or State to recover as damages against the Contractor any loss, expense or cost (including without limitation attorney's fees) incurred by the Purchaser or State resulting from any such failure (including without limitation any impairment or loss of funding, whether in whole or in part, from the State or any damages owed to the State by the Purchaser). While the Contractor has no direct contractual privity with the State, as a lender to the Purchaser for the funding of its project, the Purchaser and the Contractor agree that the State is a third-party beneficiary and neither this paragraph (nor any other provision of this Agreement necessary to give this paragraph force or effect) shall be amended or waived without the prior written consent of the State.

Appendix C

Contract 3: Geotechnical and Soil/Groundwater Investigations

Appendix C-1: Geotechnical Evaluation Report
City of South Haven – Sanitary Sewer Improvements
South Haven, Michigan
Soils and Materials Engineers, Inc.
June 6, 2016

Appendix C-2: Utility Corridor Investigation Report for the Main Pump Station and Black River Street Reconstruction Project
Villa Environmental Consultants, Inc.
May 5, 2016

GEOTECHNICAL EVALUATION REPORT

CITY OF SOUTH HAVEN – SANITARY SEWER IMPROVEMENTS
SOUTH HAVEN, MICHIGAN

SME Project No. 073642.00
June 8, 2016

3301 Tech Circle Drive
Kalamazoo, MI 49008-5611

T (269) 323-3555

www.sme-usa.com

June 8, 2016

Mr. Jason W. Marquardt, PE
The Abonmarche Group
95 W. Main Street
Benton Harbor, Michigan 49023

Via e-mail: *jmarquardt@abonmarche.com (PDF file)*

RE: Geotechnical Evaluation
City of South Haven – Sanitary Sewer Improvements
South Haven, Michigan
SME Project No. 073642.00

Dear Mr. Marquardt:

We have completed our geotechnical evaluation for the sanitary sewer improvements planned along the Black River in South Haven. Based on the soil and groundwater conditions encountered at the boring locations, we have developed recommendations for the installation of the proposed sanitary sewer, including recommendations related to trench excavation support, temporary groundwater control, pipe bedding, and reuse of excavated soils as engineered fill. Where the sanitary sewer elements will be supported by piles, we have also prepared a brief summary of our design approach. The results of our findings, along with our related recommendations, are provided herein.

We appreciate the opportunity to be of service. If you have questions or require additional information, please contact us.

Sincerely,

SME

Jeffery M. Krusinga, PE, GE
Senior Consultant

Timothy H. Bedenis, PE
Chief Geotechnical Engineer

W\073642.00\Final Documents\073642.00+060816+GER.docx

© 2016 SME

TABLE OF CONTENTS

1.0 INTRODUCTION 1
1.1 SITE CONDITIONS 1
1.2 PROJECT DESCRIPTION 1
2.0 EVALUATION PROCEDURES 2
2.1 FIELD EXPLORATION 2
2.2 LABORATORY TESTING 2
3.0 SUBSURFACE CONDITIONS 3
3.1 SOIL CONDITIONS 3
3.2 GROUNDWATER CONDITIONS 3
4.0 ANALYSIS AND RECOMMENDATIONS 4
4.1 DISCUSSION ON THE PRESENCE OF ORGANIC SOILS 4
4.2 SANITARY SEWER CONSTRUCTION 4
4.2.1 TRENCH EXCAVATION SUPPORT 4
4.2.2 TEMPORARY GROUNDWATER CONTROL 5
4.2.3 PIPE SUPPORT 6
4.3 PILE-SUPORTED UTILITY DESIGN 7
4.4 ENGINEERED FILL REQUIREMENTS 8
4.5 CONSTRUCTION CONSIDERATIONS 9

APPENDIX A

BORING LOCATION DIAGRAM
BORING LOG TERMINOLOGY
BORING LOGS (BR1, BR2, BR3, BR201 THROUGH BR204, ML1 THROUGH ML8, AND ML201 THROUGH ML208)

APPENDIX B

IMPORTANT INFORMATION ABOUT YOUR GEOTECHNICAL ENGINEERING REPORT
GENERAL COMMENTS
LABORATORY TESTING PROCEDURES

© 2016 SME

1.0 INTRODUCTION

This report presents the results of the geotechnical evaluation performed by SME for the sanitary sewer improvements planned along the east and west sides of the Black River, just upstream (north) of Dyckman Avenue, in South Haven, Michigan. To assist with the preparation of this report, SME was provided the following document:

- A project plan set titled "City of South Haven, Contract #3 – Dunkley and Black River Infrastructure Improvements" dated May 2016 and prepared by Abonmarche.

1.1 SITE CONDITIONS

The project is situated along City of South Haven streets and City-owned open space located on the east and west sides of the Black River, just upstream (north) of Dyckman Avenue. On the west side of the Black River, proposed sanitary sewer improvements will extend along Black River Street starting at about Dyckman Avenue and extending about 1,300 feet north along Black River Street. On the east side of the Black River, proposed sanitary sewer improvements will start on Dunckley Avenue about 250 feet north of Dyckman Avenue, and then extend about 250 feet north to the point where Dunckley Avenue turns to the east and Wells Street begins. The improvements will continue north from this point along Wells Street for about 700 feet to just north of the proposed Main Pump Station. Improvements will also extend along the south side of the Main Pump Station beginning at Black River Park Drive and extending about 675 feet east. The alignment for the sanitary sewer improvements will then turn north and extend about 375 feet to a parking lot cul-de-sac adjacent to the Black River.

On the west side of the Black River, the sanitary sewer improvements will be located within the roadway and right-of-way of Black River Street. Surface elevations along Black River Street within the alignment vary from about 584 feet to 597 feet. On the east side of the Black River, the sanitary sewer improvements will be located within the roadway and right-of-way of Dunckley Avenue, Wells Street, and Black River Park Drive, and within City-owned property on the south and east sides of the Main Pump Station. On the east side of the Black River, surface elevations along the sanitary sewer alignment vary from about 582 feet to 585 feet. Portions of the project are located within the flood plain of the Black River. Based on information provided by Abonmarche, the water surface elevation associated with the 100-year flood is 584.3 feet, and the water surface elevation associated with the 500-year flood is 585.7 feet.

1.2 PROJECT DESCRIPTION

The project consists of the construction of new gravity sanitary sewer to replace existing force main sanitary sewer. The new gravity sanitary sewer on the east side of the Black River will extend to a new sanitary manhole (SAN MH 30) located on the west side of the new Main Pump Station. On the west side of the Black River along Black River Street, the new gravity sanitary sewer will extend to a new sanitary lift station located within the right-of-way of Black River Street. A new sanitary force main (10-inch-diameter HDPE pipe) will extend from this lift station to a new sanitary manhole (SAN MH 29) located just upstream and to the south of sanitary manhole SAN MH 30 located near the Main Pump Station. From sanitary manhole SAN MH 30, sewage will flow to the east into the new Main Pump Station. From sanitary manhole SAN MH 29, new gravity sanitary sewer will extend eastward and then north and terminate at the parking lot cul-de-sac adjacent to the Black River. The new sanitary sewer will range in diameter from 15 to 30 inches. On the west side of the Black River, excavation depths from the existing ground surface to the planned pipe invert levels range from about 7 to 20 feet. On the east side of the Black River, excavation depths from the existing ground surface to the planned pipe invert levels range from about 7 to 15 feet.

© 2016 SME

The project also consists of the construction of a new Main Pump Station to which the new gravity sanitary sewer will discharge. The design of the new Main Pump Station, and the portion of the new sanitary sewer that extends upstream from the new Main Pump Station to sanitary manhole SAN MH 30, is the responsibility of Hubbell, Roth & Clark, Inc. (HRC). SME's geotechnical recommendations for design of the new Main Pump Station were provided in our report to Abonmarche dated April 29, 2016. SME also prepared design plans for construction of a sheet pile cofferdam inside of which the new wet well associated with the Main Pump Station will be constructed.

The project will also include the construction new storm sewer and water main utilities, and the reconstruction of roadway disturbed by the installation of new sanitary sewer and other utility improvements. SME's scope did not include providing geotechnical recommendations specific to these other improvements

2.0 EVALUATION PROCEDURES

2.1 FIELD EXPLORATION

SME completed 23 borings (BR1, BR2, BR3, BR201 through BR204, ML1 through ML8, and ML201 through ML208) for the project. Borings BR1, BR2, BR3, and ML1 through ML8 were completed between March 27 and April 3, 2015, under SME Project No. 071718.00. Borings BR201 through BR204 and ML201 through ML208 were completed between January 21 and 29, 2016. The approximate locations of the borings are depicted on Sheet 8 of 41 (Existing Conditions – 1) of the referenced Abonmarche plan set. SME developed a Boring Location Diagram from this plan sheet and included a copy of this Boring Location Diagram in Appendix A of this report.

Abonmarche and SME jointly determined the planned depths and locations of the borings. SME located the borings in the field by taping from existing site features. SME estimated the existing ground surface elevations at the boring locations to the nearest 1-foot based on site topographic information contained on the referenced project plan set prepared by Abonmarche.

The borings were drilled using a truck-mounted, rotary-type drill rig. The borings were advanced using continuous-flight, hollow-stem augers. The borings included soil sampling based upon the Split-Barrel Sampling procedure. Recovered split-barrel samples were sealed in glass jars by the driller.

Groundwater level measurements in the boreholes were recorded during and immediately after completion of each boring. The boreholes were backfilled with auger cuttings after completion. Therefore, long-term groundwater levels are not available from the borings.

Soil samples recovered from the field exploration were returned to the SME laboratory for further observation and testing.

2.2 LABORATORY TESTING

The laboratory testing program consisted of performing visual soil classification on recovered samples in accordance with ASTM D2488. Moisture content tests were performed on recovered cohesive samples and on samples that visually appeared to be organic in nature. Loss-on-ignition (LOI) tests were performed on selected samples (based on visual assessment) of recovered fill to estimate the organic matter content. In addition, hand penetrometer tests were performed on recovered cohesive samples, and Torvane shear tests were performed on organic samples where a relatively undisturbed sample was collected. The Laboratory Testing Procedures in Appendix B provides general descriptions of the laboratory tests. Based on the laboratory testing, we assigned a Unified Soil Classification System (USCS) group symbol to each of the soil strata encountered.

© 2016 SME

Upon completion of the laboratory testing, boring logs were prepared that include information on materials encountered, penetration resistances, pertinent field observations made during the drilling operations, and the results of the laboratory tests. The existing ground surface elevation at the boring location, as estimated by SME, is also provided on each boring log. The boring logs are included in Appendix A of this report. Explanations of symbols and terms used on the boring logs are provided on the Boring Log Terminology sheet included in Appendix A of this report. The soil descriptions included on the boring logs were developed from both visual classification and the results of laboratory tests, where applicable.

Soil samples retained over a long time, even sealed in jars, are subject to moisture loss and are no longer representative of the conditions initially encountered in the field. Therefore, soil samples are normally retained in our laboratory for 60 days and are then disposed of, unless instructed otherwise.

3.0 SUBSURFACE CONDITIONS

3.1 SOIL CONDITIONS

The conditions encountered at the borings generally consisted of asphalt pavement or surface topsoil overlying sand and clay fill. At many of the borings, the fill was underlain by organic soils consisting of organic silt (also often called “marl”) and peat. The organic soils, where present, were underlain by interbedded natural sands, silts, and clays.

The organic soils (i.e., the marl and peat) encountered in the borings are typical of soils that are often encountered in and around water bodies and in flood plains. Initial development around these areas typically involves fill being placed over the organics to raise site grades. Therefore, the organic soils are often encountered “buried” below existing fill. In some of the borings, sands were encountered interbedded within the organic soils, which is typical for alluvial deposits (i.e., soils deposited in water). Please refer to the boring logs for the specific soil conditions encountered at each boring, and for the results of the field and laboratory testing.

The soil profile described above and included on the appended boring logs is a generalized description of the conditions encountered. The stratification depths shown on the boring logs are intended to indicate a zone of transition from one soil type to another. They are not intended to show exact depths of change from one soil type to another. The soil descriptions are based on visual classification of the soils encountered. Soil conditions may vary between or away from the boring locations from the conditions noted on the logs. Please refer to the boring logs for the soil conditions at the specific boring locations.

3.2 GROUNDWATER CONDITIONS

As would be expected due to the proximity of the site to the river, groundwater was observed in the borings at relatively shallow depths during drilling and after completion of drilling. In the few borings where groundwater was not observed, the boring was either drilled to a relatively shallow depth beginning at a localized higher elevation, or the boring penetrated relatively impermeable material, such as clay or clayey silt. In general, most groundwater in the borings was observed between about elevations 577 and 582 feet.

Groundwater is expected to be relatively shallow at this site because of the presence of the nearby Black River, and because most of the site is a low-lying area within a flood plain. Hydrostatic groundwater levels and groundwater seepage rates encountered in excavations should be expected to fluctuate throughout the year, based on variations in precipitation, evaporation, run-off, the water level within the river, and other factors. The groundwater levels indicated on the boring logs, and presented in this section, represent conditions at the time the readings were taken. The actual groundwater levels at the time of construction may vary.

© 2016 SME

4.0 ANALYSIS AND RECOMMENDATIONS

4.1 DISCUSSION ON THE PRESENCE OF ORGANIC SOILS

As indicated above, many of the borings encountered buried organic soils (peat and/or marl) below the overlying existing fill. In many areas, the organic soils extend relatively far below the proposed invert levels for the sanitary sewer pipe and the proposed bottom elevation of the sanitary sewer structures.

Organic soils, such as peat and marl are compressible, meaning they will compress or settle over time. The amount of compression or settlement that will be experienced over time is dependent on the thickness of the organic deposit, the compressibility of the material, and the amount of additional stress or load (if any) placed on the organic soils (e.g., due to the construction of overlying improvements or placement of new fill). Organic soils with higher moisture contents are more compressible than similar organic soils with lower moisture contents, and peat tends to be more compressible than marl. Because organic soils compress or settle slowly over time, they can be problematic if left in-place below structures and other improvements due to excessive total and differential settlements that might be experienced over time. For critical utilities that convey fluids by gravity, settlement over time could lead to reduced or compromised hydraulic efficiency, and failures could occur at pipe joints if differential settlements occur over a relatively short distance.

Due to the critical nature of the new gravity sanitary sewer, we recommended to Abonmarche that where organic soils are present below sanitary sewer pipe inverts and below structure bottoms, the organic soils be undercut (i.e., removed) and replaced with engineered fill. Where the organic soils extend too deep below pipe invert levels and structure bottoms to be feasible for undercutting, we recommended to Abonmarche that the sanitary sewer pipe and associated structures be supported by a pile system whereby the piles provide support for the sewer pipe and structures (e.g., manholes and lift stations) and the piles convey loads from these supported elements to suitable strata below the organic soils. SME was retained by Abonmarche to provide design detailing for the pile-supported sanitary sewer for this project. A generalized summary of our design methodology related to pile support of the sanitary sewer is provided below in Section 4.3 of this report. Section 4.3 also presents recommendations related to installation of the piles.

4.2 SANITARY SEWER CONSTRUCTION

4.2.1 TRENCH EXCAVATION SUPPORT

The proposed sanitary sewer will be installed by the open-cut method of construction. For the open-cut method of sewer installation, the contractor must provide a safely sloped, benched, or supported excavation (e.g., using trench boxes, sheeting, etc.) in compliance with federal, state, and local safety regulations for persons working in an excavation that may expose them to the danger of moving ground. Stockpiled soils and construction equipment should not be placed, nor operated, near the excavations as the increased load along the edges of the excavations could result in instability of the slope of the excavation.

It may be especially difficult to maintain stable sloped excavations through existing fill, organic soils, or lower strength natural soils. In areas where adequate side sloping or benching is not feasible, due to excavation depth, the presence of weak organic soils, or the proximity of existing structures, the excavation sidewalls must be supported with internally-braced sheeting or trench boxes. The actual type of lateral support required will be based on the soil and groundwater conditions encountered, the depth of the excavation, and the proximity of nearby structures. Temporary excavation support measures should be designed by an experienced Registered Professional Engineer retained by the excavation contractor and installed by a contractor that is experienced with the type of excavation support measures designed by the engineer. If material is stored or equipment will be operated near a supported excavation, the design for the shoring or bracing must consider the extra pressure due to the superimposed loads.

© 2016 SME

Excavations performed within or adjacent to existing roadways or other structures may require underpinning and/or bracing and shoring so that these existing improvements are not undermined or disturbed. Underpinning or shoring for temporary support of existing improvements to remain should be designed by an experienced Registered Professional Engineer retained by the excavation contractor and installed by a contractor that is experienced with the type of underpinning or shoring designed by the engineer. Special measures for temporary utility support will be required where the proposed utility alignment crosses existing utilities (e.g., gas lines, water mains, etc.).

When excavating for the sanitary sewer where the new sewer will be supported directly on suitable inorganic subgrade, only the amount of trench that can be backfilled that day should be opened up to mitigate the potential for disturbance to the pipe subgrade. Excavations should not be left open overnight due to the possibility of disturbance by groundwater or sloughing of soils.

4.2.2 TEMPORARY GROUNDWATER CONTROL

Based on the soil and groundwater conditions observed at the boring locations and on the anticipated depths of excavation, groundwater seepage or accumulations should be expected within excavations for construction of the sanitary sewer. Therefore, temporary dewatering measures will be necessary to maintain a relatively dry excavation for sanitary sewer construction and to limit disturbances to the subgrade at the bottom of the excavation.

The type of dewatering system will depend on the specific soil conditions and the required depth of excavation below (or near to) the groundwater level. In general, we anticipate more aggressive dewatering techniques (e.g., well points and/or dewatering wells), possibly in combination with a groundwater cut-off or barrier, such as steel sheet piling, will be required for excavations extending greater than about 1-foot below the groundwater level in areas of predominately granular (i.e., sandy) soils. Based on the borings, the installation of the sanitary sewer throughout much of the alignment will require aggressive dewatering techniques. However, the borings also indicated some variability in the soil conditions throughout the alignment. For example, at borings BR1 and BR203, clayey silts and silty clays with relatively low permeability were generally encountered throughout the depths of these borings. In these areas, dewatering may be feasible using conventional sump and pit methods to remove water that seeps into the excavation provided that the excavation does not penetrate wet sand strata. Construction dewatering will be one of the main construction challenges for this project. The contractor (or more likely a dewatering subcontractor) will need to be prepared to handle variations in the required dewatering efforts throughout the proposed alignment.

As indicated above, sheet piling can also be used for excavation support in areas where an open cut with benched or sloped sides is not practical. The sheeting can also serve to reduce (but not eliminate) the amount of groundwater flow into the excavation. The sheeting (if used) should extend a minimum of 5 feet below the planned bottom of the excavation (<u>including any undercut depth required</u>). Deeper penetration may be required depending on the use and type of dewatering, the encountered soil and groundwater conditions, and the use of internal bracing. The sheeting and bracing should be designed to withstand both the lateral earth pressure and the hydrostatic pressure. A concrete tremie seal may be considered at the base of the excavation to seal off the bottom from the groundwater. Temporary dewatering wells may also be used to reduce the hydrostatic pressure on the sheeting. Multiple wells will probably be required to significantly lower the groundwater level in deep excavations into predominantly sand soils. Wells will require continuous pumping through the construction period, until at least after completion of backfilling the excavation.

The groundwater table should be temporarily lowered to a minimum of 1-foot below the bottom of the excavation for the sanitary sewer trench and for construction of sanitary sewer structures. The spacing interval(s) and depth for dewatering operations will depend on the rate and volume of groundwater flow experienced and should be determined in the field by the dewatering contractor.

© 2016 SME

It should be noted that, even after dewatering, the subgrade soils near the bottom of the excavation will probably still be wet and sensitive to disturbance. In such a case, a layer of crushed stone may need to be placed over the wet subgrade to protect the subgrade. For more information regarding the placement of crushed stone over wet subgrade, refer to the "Pipe Support" section (Section 4.2.3) of this report.

The final design of the temporary dewatering/earth retention system is typically the responsibility of the contractor. We would be pleased to assist you in the development of a performance based specification for this portion of the project.

4.2.3 PIPE SUPPORT

Suitable natural sands, silts, or clays must be present below pipe invert levels and sanitary structures that are not supported by piles. Where looser or lower strength soils, organic soils, or disturbed and unsuitable soils are encountered, and the pipe and/or sewer structure will be supported at-grade (i.e., pile support is not planned), these soils must be removed (i.e., undercut) and replaced with engineered fill or crushed aggregate to the design trench bottom elevation or structure subgrade elevation. Undercut excavations to remove unsuitable soils should be properly oversized beneath utility pipes, manholes, and other structures as follows:

- Undercuts to remove unsuitable *inorganic* soils should be oversized so that the base of the undercut is located a minimum of a two-vertical to one-horizontal (2V:1H) slope from the outside edges of the pipe or structure to the base of the undercut.
- Where organic soils are present and need to be undercut, the undercut to remove unsuitable *organic* soils should be oversized so that the base of the undercut is located a minimum of a one-vertical to one-horizontal (1V:1H) slope from the outside edges of the pipe or structure to the base of the undercut.

Backfill can be placed within the undercut excavation to the design pipe bedding level or structure subgrade level after the undercut is complete, and suitable natural inorganic soils are visibly verified at the base of the undercut. Please see Section 4.4 ("Engineered Fill Requirements") for pipe bedding, pipe cover, and trench backfill requirements.

Based on our discussions with Abonmarche, we have targeted a maximum undercut depth of 4 feet to remove organic soils below the pipe bottom or the bottom of sewer structures. We believe that organic soils that extend deeper than this depth will not be able to be feasibly undercut from within a relatively narrow braced or shored excavation because the undercut must be oversized so that the base of the undercut is located at least beyond a 1:1 slope extending downward from the outside edges of the pipe or structure above. For areas where organic soils are present that cannot be undercut, we recommend the sewer elements be supported by deep foundations (piles). See Section 4.3 of this report for a summary of our design recommendations related to the development by SME of detailing for pile support, and our recommendations related to installation of the piles.

Continuous observation of the sanitary sewer subgrade soils should be made during construction to verify such soils are suitable for support of the sanitary sewer prior to placement of pipe bedding and the sanitary sewer pipe. Evaluation of the subgrade at the base of the excavation could include probing the material (such as with dynamic cone penetrometers and hand-auger probes) and by visual review of subgrade materials in the excavator bucket.

If wet conditions are encountered, a layer of coarse-crushed aggregate may be required at the base of the undercut or below the pipe bedding material to provide a stable working surface on which to place and compact bedding and/or backfill. The crushed aggregate should range in size from 1- to 3-inches and contain no more than 7 percent material finer than the No. 200 sieve. The crushed aggregate should be placed in lifts no greater than 1-foot in thickness and then worked or "charged" into the subgrade with the back-end of the backhoe bucket until the subgrade suitably firms. The required thickness of this

© 2016 SME

stabilization layer will depend on the severity of the groundwater conditions. The coarse-crushed aggregate should be topped with MDOT 21AA dense-graded aggregate to form a smooth cap on which to place pipe bedding material or to place overlying sand fill, and to serve as a “choke” layer to reduce the potential for migration of overlying sand fill into the voids of the coarse aggregate.

The sanitary sewer pipe should be bedded with an approved granular material meeting the requirements of the municipal agency with jurisdiction. Pipe cover material should also consist of an approved granular material meeting the requirements of the municipal agency with jurisdiction. Pipe bedding and pipe cover should be placed and compacted throughout the zone required by the agency with jurisdiction.

4.3 PILE-SUPPORTED UTILITY DESIGN

Where organic soils extend below proposed sanitary sewer improvements (pipe and structures) and these organic soils cannot be undercut and replaced with engineered fill, there is a risk of poor long-term performance of the sanitary sewer elements because of settlement or compression of the underlying organic soils left in-place. In these areas, the project team elected to support the sanitary sewer elements on deep foundations, and SME was retained to provide design detailing for the deep foundations and associated support elements.

Based on previous experience with supporting buried utilities over organic soils, SME’s design elected to support the sanitary sewer pipe continuously along its length using a “cradle” composed of a pair of sheet piles extending between adjacent pile supports. For the piles, we selected treated timber piles because we anticipate these piles will provide the required load capacity while being economical for use. It should be noted that other pile types (e.g., concrete-filled, closed-end, steel pipe piles) could be considered for use as a contractor-proposed alternate. For support of the sewer structures (e.g., manholes), SME’s design consists of the construction of a reinforced concrete pile cap supported by three timber piles to form a “platform” on which to construct the sewer structure.

The timber piles (and other pile types) will develop their load capacity within the natural inorganic soils below the organic soils that remain in-place. For our design, we elected to utilize a single ultimate pile capacity and estimated pile length, and then vary the spacing between pile supports where necessary. We felt it less confusing to utilize a single pile capacity and estimated pile length compared to the use of variable pile capacities/lengths. The load capacity of each timber pile will be developed from resistance at the pile tip and from skin friction along the sides of the portion of the pile extending into the soils below the pile top. Our static analysis of pile capacity considered a timber pile with a minimum 12-inch-diameter butt and a minimum 7-inch-diameter tip. Based on our design analysis, we estimate a single 45-foot-long timber pile will develop an ultimate capacity of 68 kips in compression. Our design utilized a working capacity based on applying a factor of safety (FOS) of 2 after considering downdrag on each pile. Downdrag for the piles will occur over time if the organic soils surrounding the piles move sufficiently downward relative to the piles, which would result from secondary compression of the organic soils even if stresses in the organic soils are not increased due to fill placement. Downdrag will also occur due to movement of soils downward relative to the pipe cradle or structure platform and the soil located above the cradle or platform.

Piles delivered to the site that do not conform to the dimensional requirements for tip and butt diameters listed above should not be used. Timber piles should conform to ASTM D25 Standard Specification for Round Timber Piles. Piles should be pressure treated according to latest AWPA standards for timber piles in fresh water environments.

A wave equation analysis must be performed to determine the pile driving criteria, and if the proposed pile driving system is capable of obtaining the ultimate pile capacity without damaging the piles. A qualified professional engineer should perform the wave equation analysis. This analysis requires specific information on the type and size of the pile hammer, cushion materials, and other information usually not available until a pile contractor is selected. Therefore, we recommend the wave equation analysis be required as part of the contractor submittals for the pile foundations. SME should verify the required

© 2016 SME

capacity of the driven piles is achieved in the field by observing the driving resistance or “set” of each pile. The required set will be developed based on the wave equation analysis. Based on using a FOS of 2.0 for design of the piles, we recommend static load testing be performed on the piles to verify the ultimate pile capacity. Typically, one static load test is required for each combination of pile length and capacity. For this project, since there is only one pile length and load capacity, one pile load test is required. As an alternative to static load testing (which involves applying load to the top of the pile and measuring deflection at the top of the pile as load is applied), dynamic load testing using a pile driving analyzer (PDA) system could also be performed.

Transition from grade support of the sewer pipe to pile support of the sewer pipe should not occur between sewer manholes. Instead, we recommend that such transitions occur at a manhole. Therefore, where such transitions occur, the sewer pipe on one side of the manhole will be pile-supported, while the sewer pipe on the other side of the manhole will be supported at-grade. Because the borings performed for this project in some areas are relatively widely spaced, we had to use judgment as to where the transition might occur between where undercuts of organic soils are no longer feasible (where the sewer needs to be supported by piles) and where undercutting is feasible (where the sewer pipe may be supported at-grade after undercutting, as needed). As the new sewer is constructed, there should be flexibility in the layout such that a manhole may be moved along a straight segment of sewer run so that the final location of the manhole is situated where such a transition is made based on the soil conditions encountered and on the feasibility of undercutting.

4.4 ENGINEERED FILL REQUIREMENTS

Any fill placed within roadway areas or areas of future development, including utility trench backfill, should be an approved material, free of frozen soil, organics, or other deleterious materials. If the proposed fill contains more than 4 percent organics, we recommend such materials not be used for engineered fill. The fill should be spread in level layers (lifts) not exceeding a thickness that can be suitably compacted throughout the entire lift with the compaction equipment used. The fill in structural areas should be compacted to a minimum of 95 percent of the maximum dry density as determined in accordance with the Modified Proctor test. In open or greenbelt areas, the backfill can be compacted to a minimum of 90 percent of the maximum dry density as determined in accordance with the Modified Proctor test. Sand fill should be compacted with vibratory equipment, such as a hoe-pac or walk-behind plate compactor.

We recommend the engineered fill for trench backfill consist of on-site or imported granular materials meeting MDOT Class II or Class III specifications. For trenches located below or adjacent to proposed or existing pavements, the granular trench backfill should be compacted to a minimum of 95 percent of the maximum dry density as determined in accordance with the Modified Proctor test up to at least the level of a 45-degree line extending downward from the edge of the adjacent pavement.

The clays, silts, and organic soils (peat and marl) encountered in the borings are not considered suitable for reuse as engineered fill. Some of the sand fill and natural sands may meet the requirements for MDOT Class II or Class III granular material and would therefore, be potentially suitable for reuse as pipe bedding, pipe cover, and trench backfill. Gradational analyses should be performed to confirm on-site soils meet the gradational requirements of MDOT Class II or Class III granular material. The contractor will need to exercise care to segregate sands planned for reuse as engineered fill from other excavated soils. Also, wet sands excavated from the sewer trench will need to be stockpiled and drained prior to reuse as engineered fill.

As indicated above in Section 4.2.3, wet conditions could be encountered at the base of excavations, at the pipe bedding subgrade, or at the bearing level for sanitary sewer structures. Where such conditions are encountered, a layer of coarse-crushed aggregate may be required for placement on the subgrade to protect the subgrade from disturbance and to form a stable construction base. The coarse-crushed aggregate used for this purpose should range in size from 1- to 3-inches and contain no more than 7 percent material finer than the No. 200 sieve. The crushed aggregate should be placed in lifts no greater than 1-foot in thickness and then worked or “charged” into the subgrade with the back-end of the backhoe

© 2016 SME

bucket until the subgrade suitably firms. The required thickness of this stabilization layer will depend on the severity of the groundwater conditions. The coarse-crushed aggregate should be topped with a dense-graded aggregate, such as MDOT 21AA, to form a smooth platform on which to place the sewer structure (e.g., manhole bottom) or to place pipe bedding material, and to serve as a “choke” layer to reduce the potential for migration of overlying sand fill into the voids of the coarse aggregate.

When using a significant volume of coarse-crushed aggregate to stabilize subgrades in excavations or to backfill undercuts, the void spaces between the coarse aggregate pieces may represent a significant volume for the migration of sand into these spaces. Where judged appropriate, heavy non-woven geotextile fabric should be used to wrap coarse aggregates to prevent the migration of sand into these void spaces.

4.5 CONSTRUCTION CONSIDERATIONS

The project site is within an area along the Black River that is prone to flooding. The contractor must provide for protection of the work area from damage during flood conditions.

The contractor should take precautions to protect adjacent utilities and other structures during construction. A pre-condition survey of existing structures and utilities should be performed to document the conditions before construction. Sensitive improvements should also be monitored during construction, especially during installation of sheet piling for excavation support and during the installation of timber piles for sanitary sewer support. Monitoring could include measuring horizontal and vertical movements, and the measurement of vibrations.

Aggressive dewatering that lowers site groundwater levels for extended periods where organic soils are present could cause surface settlements and subsidence due to compression of the organic soils (lowering of groundwater increases the effective stress in the organic soils because the soil unit weights go from buoyant to effective). Therefore, settlement of nearby improvements supported at grade (e.g., pavements, slabs, utilities, shallow foundations) could be experienced from operation of temporary dewatering measures. Design of temporary dewatering systems should consider the potential effect on surrounding improvements to remain. Planning and funding should be incorporated into the project for repairs to or reconstruction of non-critical improvements (e.g., sidewalks, pavements, etc.) that may be damaged from the dewatering operations. For dewatering near more critical or sensitive improvements (e.g., existing buildings, utilities, etc.), the Owner may wish to monitor these elements more closely during construction and potentially restrict the type of dewatering or the amount of groundwater drawdown allowed so as to mitigate the risk of damage.

The contractor should be prepared to handle environmental conditions encountered along the proposed sewer alignment, which may affect the excavation, removal, or disposal of soil; dewatering of excavations; and health and safety of workers. We understand groundwater in portions of the overall site may be impacted. Any Environmental Assessment reports prepared for this project should be made available for review by bidders and the successful contractor so that they may incorporate information and recommendations from these reports into their bid and work plan.

All excavations should be sloped, shored, or braced in accordance with MI-OSHA requirements. The contractor should provide an adequately constructed and braced shoring system for employees working in an excavation that may expose employees to the danger of moving ground. If material is stored or heavy equipment is operated near an excavation, stronger shoring must be used to resist the increased pressure due to the superimposed loads.

© 2016 SME

APPENDIX A

BORING LOCATION DIAGRAM
BORING LOG TERMINOLOGY
BORING LOGS (BR1, BR2, BR3, BR201 THROUGH BR204, ML1 THROUGH ML8, AND ML201 THROUGH ML208)

© 2016 SME

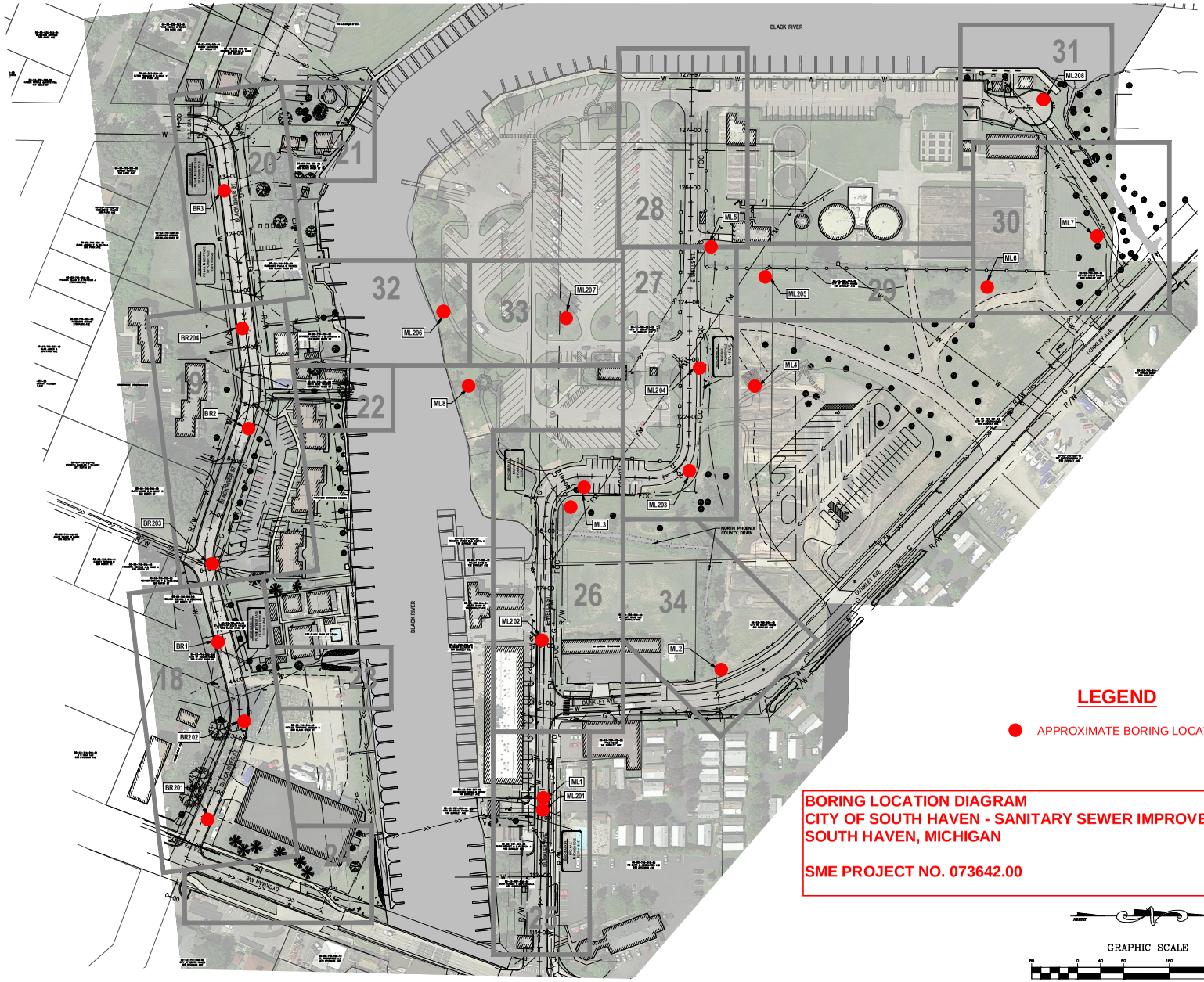

LEGEND

APPROXIMATE BORING LOCATION

BORING LOCATION DIAGRAM
CITY OF SOUTH HAVEN - SANITARY SEWER IMPROVEMENTS
SOUTH HAVEN, MICHIGAN

SME PROJECT NO. 073642.00

GRAPHIC SCALE

(IN FEET)
1 inch = 80 ft.

LEGEND

ML1 = SOIL BORING LOCATION

C1.15

NO.	REVISION DESCRIPTION:	BY:	DATE:

ABONMARCHE
Consultants, Inc.
Engineering
Architecture
Land Surveying
Environmental
Planning/Feasibility
Construction Services
Landscape Architecture
Interior Design
Corporate Office: 5500 Mercantile Drive
South Bend, IN
Evansville, IN
T 219.972.2275
F 219.972.2276
www.abonmarche.com

City of South Haven
South Haven SRF Projects
CONTRACT DOCUMENTS - VOLUME 1

PROJECT: DUNKLEY AND BLACK RIVER SANITARY SEWER IMPROVEMENTS
SOUTH HAVEN, MI

SHEET TITLE: EXISTING CONDITIONS - 1

DRAWN BY: DJL
DESIGNED BY: DAD/SPJ
PM REVIEW:
QA/QC REVIEW:
DATE: MAY 2016
SEAL:

SIGNATURE:
DATE:

HARD COPY IS INTENDED TO BE 24" X 36" WHICH INDICATES SCALE(S) INDICATED AND GRAPHIC QUALITY MAY NOT BE ACCURATE FOR ANY OTHER SIZE.

SCALE:
HORZ: 1"=80'
VERT: N/A

ACI JOB #: 14-0520

SHEET NO.: 8 of 41

E:\CIVIL 3D\ENG_2014\14-0520 SOUTH HAVEN SRF\14-0520\dwg\14-0520 BR.dwg, 5/23/2016 11:12:15 AM, spilkinson.ac1, 1:1

BORING LOG TERMINOLOGY

UNIFIED SOIL CLASSIFICATION AND SYMBOL CHART

COARSE-GRAINED SOIL
(more than 50% of material is larger than No. 200 sieve size.)

GRAVEL More than 50% of coarse fraction larger than No. 4 sieve size	Clean Gravel (Less than 5% fines)		
		GW	Well-graded gravel; gravel-sand mixtures, little or no fines
		GP	Poorly-graded gravel; gravel-sand mixtures, little or no fines
	Gravel with fines (More than 12% fines)		
		GM	Silty gravel; gravel-sand-silt mixtures
		GC	Clayey gravel; gravel-sand-clay mixtures
SAND 50% or more of coarse fraction smaller than No. 4 sieve size	Clean Sand (Less than 5% fines)		
		SW	Well-graded sand; sand-gravel mixtures, little or no fines
		SP	Poorly graded sand; sand-gravel mixtures, little or no fines
	Sand with fines (More than 12% fines)		
		SM	Silty sand; sand-silt-gravel mixtures
		SC	Clayey sand; sand–clay-gravel mixtures

FINE-GRAINED SOIL
(50% or more of material is smaller than No. 200 sieve size)

SILT AND CLAY Liquid limit less than 50%	ML	Inorganic silt; sandy silt or gravelly silt with slight plasticity
	CL	Inorganic clay of low plasticity; lean clay, sandy clay, gravelly clay
	OL	Organic silt and organic clay of low plasticity
SILT AND CLAY Liquid limit 50% or greater	MH	Inorganic silt of high plasticity, elastic silt
	CH	Inorganic clay of high plasticity, fat clay
	OH	Organic silt and organic clay of high plasticity
HIGHLY ORGANIC SOIL	PT	Peat and other highly organic soil

OTHER MATERIAL SYMBOLS

Topsoil, Void, Sandstone, Asphalt, Glacial Till, Siltstone, Base, Coal, Limestone, Concrete, Shale, Fill

LABORATORY CLASSIFICATION CRITERIA

GW	$C_U = \frac{D_{60}}{D_{10}}$ greater than 4; $C_C = \frac{D_{30}}{D_{10} \times D_{60}}$ between 1 and 3	
GP	Not meeting all gradation requirements for GW	
GM	Atterberg limits below "A" line or PI less than 4	Above "A" line with PI between 4 and 7 are borderline cases requiring use of dual symbols
GC	Atterberg limits above "A" line with PI greater than 7	
SW	$C_U = \frac{D_{60}}{D_{10}}$ greater than 6; $C_C = \frac{D_{30}}{D_{10} \times D_{60}}$ between 1 and 3	
SP	Not meeting all gradation requirements for SW	
SM	Atterberg limits below "A" line or PI less than 4	Above "A" line with PI between 4 and 7 are borderline cases requiring use of dual symbols
SC	Atterberg limits above "A" line with PI greater than 7	

Determine percentages of sand and gravel from grain-size curve. Depending on percentage of fines (fraction smaller than No. 200 sieve size), coarse-grained soils are classified as follows:

Less than 5 percent……GW, GP, SW, SP
More than 12 percent……GM, GC, SM, SC
5 to 12 percent……Cases requiring dual symbols

- SP-SM or SW-SM (SAND with Silt or SAND with Silt and Gravel)
- SP-SC or SW-SC (SAND with Clay or SAND with Clay and Gravel)
- GP-GM or GW-GM (GRAVEL with Silt or GRAVEL with Silt and Sand)
- GP-GC or GW-GC (GRAVEL with Clay or GRAVEL with Clay and Sand)

If the fines are CL-ML:

- SC-SM (SILTY CLAYEY SAND or SILTY CLAYEY SAND with Gravel)
- SM-SC (CLAYEY SILTY SAND or CLAYEY SILTY SAND with Gravel)
- GC-GM (SILTY CLAYEY GRAVEL or SILTY CLAYEY GRAVEL with Sand)
- GM-GC (CLAYEY SILTY GRAVEL or CLAYEY SILTY GRAVEL with Sand)

PARTICLE SIZES

Boulders	-	Greater than 12 inches
Cobbles	-	3 inches to 12 inches
Gravel- Coarse	-	3/4 inches to 3 inches
Fine	-	No. 4 to 3/4 inches
Sand- Coarse	-	No. 10 to No. 4
Medium	-	No. 40 to No. 10
Fine	-	No. 200 to No. 40
Silt and Clay	-	Less than (0.0074 mm)

PLASTICITY CHART

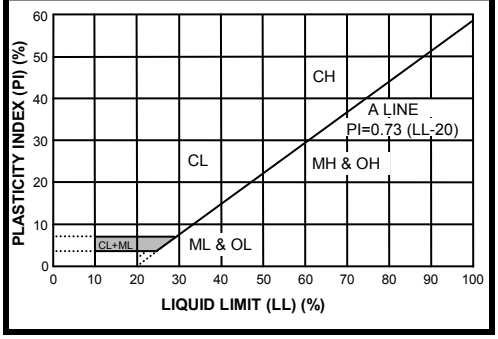

VISUAL MANUAL PROCEDURE

When laboratory tests are not performed to confirm the classification of soils exhibiting borderline classifications, the two possible classifications would be separated with a slash, as follows:

For soils where it is difficult to distinguish if it is a coarse or fine-grained soil:

- SC/CL (CLAYEY SAND to Sandy LEAN CLAY)
- SM/ML (SILTY SAND to SANDY SILT)
- GC/CL (CLAYEY GRAVEL to Gravelly LEAN CLAY)
- GM/ML (SILTY GRAVEL to Gravelly SILT)

For soils where it is difficult to distinguish if it is sand or gravel, poorly or well-graded sand or gravel; silt or clay; or plastic or non-plastic silt or clay:

- SP/GP or SW/GW (SAND with Gravel to GRAVEL with Sand)
- SC/GC (CLAYEY SAND with Gravel to CLAYEY GRAVEL with Sand)
- SM/GM (SILTY SAND with Gravel to SILTY GRAVEL with Sand)
- SW/SP (SAND or SAND with Gravel)
- GP/GW (GRAVEL or GRAVEL with Sand)
- SC/SM (CLAYEY to SILTY SAND)
- GM/GC (SILTY to CLAYEY GRAVEL)
- CL/ML (SILTY CLAY)
- ML/CL (CLAYEY SILT)
- CH/MH (FAT CLAY to ELASTIC SILT)
- CL/CH (LEAN to FAT CLAY)
- MH/ML (ELASTIC SILT to SILT)
- OL/OH (ORGANIC SILT or ORGANIC CLAY)

DRILLING AND SAMPLING ABBREVIATIONS

2ST	–	Shelby Tube – 2" O.D.
3ST	–	Shelby Tube – 3" O.D.
AS	–	Auger Sample
GS	–	Grab Sample
LS	–	Liner Sample
NR	–	No Recovery
PM	–	Pressure Meter
RC	–	Rock Core diamond bit. NX size, except where noted
SB	–	Split Barrel Sample 1-3/8" I.D., 2" O.D., except where noted
VS	–	Vane Shear
WS	–	Wash Sample

OTHER ABBREVIATIONS

WOH	–	Weight of Hammer
WOR	–	Weight of Rods
SP	–	Soil Probe
PID	–	Photo Ionization Device
FID	–	Flame Ionization Device

DEPOSITIONAL FEATURES

Parting	–	as much as 1/16 inch thick
Seam	–	1/16 inch to 1/2 inch thick
Layer	–	1/2 inch to 12 inches thick
Stratum	–	greater than 12 inches thick
Pocket	–	deposit of limited lateral extent
Lens	–	lenticular deposit
Hardpan/Till	–	an unstratified, consolidated or cemented mixture of clay, silt, sand and/or gravel, the size/shape of the constituents vary widely
Lacustrine	–	soil deposited by lake water
Mottled	–	soil irregularly marked with spots of different colors that vary in number and size
Varved	–	alternating partings or seams of silt and/or clay
Occasional	–	one or less per foot of thickness
Frequent	–	more than one per foot of thickness
Interbedded	–	strata of soil or beds of rock lying between or alternating with other strata of a different nature

CLASSIFICATION TERMINOLOGY AND CORRELATIONS

Cohesionless Soils

Relative Density	N-Value (Blows per foot)
Very Loose	0 to 4
Loose	4 to 10
Medium Dense	10 to 30
Dense	30 to 50
Very Dense	50 to 80
Extremely Dense	Over 80

Cohesive Soils

Consistency	N-Value (Blows per foot)	Undrained Shear Strength (kips/ft^2)
Very Soft	0 - 2	0.25 or less
Soft	2 - 4	0.25 to 0.50
Medium	4 - 8	0.50 to 1.0
Stiff	8 - 15	1.0 to 2.0
Very Stiff	15 - 30	2.0 to 4.0
Hard	> 30	4.0 or greater

Standard Penetration 'N-Value' = Blows per foot of a 140-pound hammer falling 30 inches on a 2-inch O.D. split barrel sampler, except where noted.

BORING BR1

PROJECT NAME: City of South Haven - Various Utility Cores & Borings **PROJECT NUMBER:** 071718.00

CLIENT: The Abonmarche Group **PROJECT LOCATION:** South Haven, Michigan

DATE STARTED: 4/3/15 **COMPLETED:** 4/3/15 **BORING METHOD:** Hollow-stem Augers

DRILLER: TW-GLD **RIG NO.:** CME 75 **LOGGED BY:** ZLM **CHECKED BY:** AJR

STATION: 360 Feet North of Dyckman Avenue
OFFSET: 6 Feet West of Centerline
STREET: Black River Street
LANE: Southbound
SURFACE ELEVATION: 590± FT

ELEVATION (FEET)	DEPTH (FEET)	PROFILE DESCRIPTION		SAMPLE TYPE/NO. INTERVAL	RECOVERY LENGTH (INCHES)	BLOWS PER SIX INCHES	N-VALUE -- ○ (10 20 30 40)	DRY DENSITY (pcf) -- ■ (90 100 110 120) / MOISTURE & ATTERBERG LIMITS (%) (PL MC LL; 10 20 30 40)	▽ HAND PENE. ⊠ TORVANE SHEAR ○ UNC.COMP. ⊡ VANE SHEAR (PK) × VANE SHEAR (REM) ⊕ TRIAXIAL (UU) SHEAR STRENGTH (KSF) (1 2 3 4)	REMARKS
590	0	0.2 2 3/4 Inches of ASPHALT PAVEMENT	589.8							
		2.1 FILL- Fine to Coarse SAND with Silt and Gravel- Brown- Moist- Medium Dense (SP-SM)	587.9	SB1	18	5 8 9	17			
				SB2	18	10 11 15	26	16	4.5+	
		CLAYEY SILT with Sand- Brown to Gray- Hard (ML/CL)		SB3	18	10 14 17	31	15	4.5+	
				SB4	18	7 8 12	20	14	4.5+	
580	10	12.0	578.0	SB5	18	7 9 10	19	14	4.5+	
		SILTY CLAY- Frequent Sand Partings- Gray- Very Stiff (CL/ML)		SB6	18	7 10 11	21	22		
		15.0 END OF BORING AT 15.0 FEET.	575.0							
570	20									
560	30									
550	40									
540	50									

GROUNDWATER & BACKFILL INFORMATION

GROUNDWATER WAS NOT ENCOUNTERED

BACKFILL METHOD: Auger Cuttings

NOTES:
1. The indicated stratification lines are approximate. In situ, the transition between materials may be gradual.
2. Pavement core and Army Corps of Engineers DCP test performed at this location. Refer to Pavement Core Log and USACE DCP Data Sheet for this boring.
3. Surface capped with asphalt cold patch after backfilling the borehole.

BORING BR2

PROJECT NAME: City of South Haven - Various Utility Cores & Borings **PROJECT NUMBER:** 071718.00

CLIENT: The Abonmarche Group **PROJECT LOCATION:** South Haven, Michigan

DATE STARTED: 4/1/15 **COMPLETED:** 4/1/15 **BORING METHOD:** Hollow-stem Augers

DRILLER: TW-GLD **RIG NO.:** CME 75 **LOGGED BY:** ZLM **CHECKED BY:** KJG

STATION: 790 Feet North of Dyckman Avenue
OFFSET: 7 Feet East of Centerline
STREET: Black River Street
LANE: Northbound
SURFACE ELEVATION: 584± FT

Depth (ft)	Elevation (ft)	Profile Description	Sample Type/No.	Recovery Length (inches)	Blows per Six Inches	N-Value	Moisture (%)	Shear Strength (KSF)	Remarks
0.3	583.7	3 Inches of ASPHALT PAVEMENT							Geotextile fabric encountered 2 feet below the ground surface.
1.0	583.0	SAND and GRAVEL	SB1	12	9 10 7	17			
2.0	582.0	FILL- Fine SAND- Brown- Moist- Medium Dense (SP)	SB2	4	10 10 11	21			
6.5	577.5	FILL- Fine to Coarse SILTY SAND with Gravel- Occasional Glass Fragments and Cinders- Moist to Wet- Medium Dense (SM)	SB3	8	3 2 1	3	>>	230	
			SB4	10	1 1 1	2	>>	134	
		Amorphic PEAT (PT)	SB5	13	2 1 1	2	>>	226	
13.0	571.0	ORGANIC SILT- Frequent Peat Seams- Dark Brown and Black- Soft (OL)	SB6	14	2 1 2	3	>>	120 0.3	
			SB7	16	2 2 2	4	>>	130 0.4	
18.5	565.5		SB8	15	1 1 2	3	>>	88 0.5	
		ORGANIC SILT- Occasional Shell Fragments- Dark Brown- Soft (OL)	SB9	16	1 1 1	2		48 0.2	
30.0	554.0		SB10	18	1 1 3	4	>>	55 0.3	
		Fine SAND- Gray- Wet- Loose (SP)	SB11	16	2 3 4	7			
40.0	544.0		SB12	14	3 4 4	8			
		END OF BORING AT 40.0 FEET.							

Elevation (ft): 580, 570, 560, 550, 540
Depth (ft): 0, 10, 20, 30, 40, 50

N-VALUE -- ○ (10 20 30 40)
DRY DENSITY (pcf) -- ■ (90 100 110 120)
MOISTURE & ATTERBERG LIMITS (%) PL MC LL (10 20 30 40)
▽ HAND PENE. ⊠ TORVANE SHEAR ○ UNC.COMP. ⊡ VANE SHEAR (PK) × VANE SHEAR (REM) ⊕ TRIAXIAL (UU)
SHEAR STRENGTH (KSF) (1 2 3 4)

GROUNDWATER & BACKFILL INFORMATION

	DEPTH (FT)	ELEV (FT)
▽ **DURING BORING:**	2.5	581.5
▼ **AT END OF BORING:**	2.0	582.0

BACKFILL METHOD: Auger Cuttings

NOTES:
1. The indicated stratification lines are approximate. In situ, the transition between materials may be gradual.
2. Pavement core and Army Corps of Engineers DCP test performed at this location. Refer to Pavement Core Log and USACE DCP Data Sheet for this boring.
3. Surface capped with asphalt cold patch after backfilling the borehole.

BORING BR3

PROJECT NAME: City of South Haven - Various Utility Cores & Borings **PROJECT NUMBER:** 071718.00

CLIENT: The Abonmarche Group **PROJECT LOCATION:** South Haven, Michigan

DATE STARTED: 4/3/15 **COMPLETED:** 4/3/15 **BORING METHOD:** Hollow-stem Augers

DRILLER: TW-GLD **RIG NO.:** CME 75 **LOGGED BY:** ZLM **CHECKED BY:** KJG

STATION: 1180 Feet North of Dyckman Avenue
OFFSET: 5.5 Feet West of Centerline
STREET: Black River Street
LANE: Southbound
SURFACE ELEVATION: 591± FT

ELEVATION (FEET)	DEPTH (FEET)	PROFILE DESCRIPTION	SAMPLE TYPE/NO. INTERVAL	RECOVERY LENGTH (INCHES)	BLOWS PER SIX INCHES	N-VALUE -- ○ (10 20 30 40)	DRY DENSITY (pcf) -- ■ (90 100 110 120) / MOISTURE & ATTERBERG LIMITS (%) (PL MC LL) (10 20 30 40)	▽ HAND PENE. ⊠ TORVANE SHEAR ○ UNC.COMP. ⊡ VANE SHEAR (PK) ⨯ VANE SHEAR (REM) ⊕ TRIAXIAL (UU) SHEAR STRENGTH (KSF) (1 2 3 4)	REMARKS
590	0	0.2 2 Inches of ASPHALT PAVEMENT (590.8)							
		1.6 FILL- Fine to Medium SAND with Silt and Gravel- Brown- Moist (SP-SM) (589.4)	SB1	18	7 8 13	21			
			SB2	18	6 6 7	13			
		Fine SAND- Occasional Dark Brown Silty Sand Layers- Brown- Moist- Medium Dense to Loose (SP)	SB3	18	5 6 7	13			
		9.5 (581.5)	SB4	18	2 2 4	6			
580	10	Fine to Medium SAND with Silt- Gray- Moist to Wet- Loose (SP-SM)	SB5	18	3 3 3	6			
		15.0 (576.0)	SB6	18	3 3 3	6			
		END OF BORING AT 15.0 FEET.							
570	20								
560	30								
550	40								
540	50								

GROUNDWATER & BACKFILL INFORMATION

	DEPTH (FT)	ELEV (FT)
▽ **DURING BORING:**	10.0	581.0
▼ **AT END OF BORING:**	Note 2	
CAVE-IN OF BOREHOLE AT:	9.8	581.2

BACKFILL METHOD: Auger Cuttings

NOTES:
1. The indicated stratification lines are approximate. In situ, the transition between materials may be gradual.
2. A groundwater observation could not be recorded after completion due to cave-in of the borehole.
3. Pavement core and Army Corps of Engineers DCP test performed at this location. Refer to Pavement Core Log and USACE DCP Data Sheet for this boring.
4. Surface capped with asphalt cold patch after backfilling the borehole.

BORING BR201

PROJECT NAME: City of South Haven Wastewater Improvements
PROJECT NUMBER: 073642.00
CLIENT: Abonmarche
PROJECT LOCATION: South Haven, Michigan
DATE STARTED: 1/29/16 **COMPLETED:** 1/29/16
BORING METHOD: Hollow-stem Augers
DRILLER: JC-GLD **RIG NO.:** CME 75
LOGGED BY: AJR **CHECKED BY:** JMK

SURFACE ELEVATION: 587± FT

Depth (ft)	Elev (ft)	Profile Description
0.2	586.8	2-1/2 inches of ASPHALT
1.2	585.8	PAVEMENT
		SAND and GRAVEL
3.5	583.5	FILL- Fine SAND- Frequent Dark Brown Silty Sand Layers- Brown- Moist- Medium Dense (SP)
6.5	580.5	FILL- Fine SILTY SAND- Frequent Sandy Silt Layers and Seams- Dark Gray- Moist- Very Loose (SM)
11.0	576.0	Fine SAND with Silt- Dark Brown- Wet- Very Loose (SP-SM)
15.5	571.5	Clayey ORGANIC SILT- Dark Brown- Medium (OL)
25.5	561.5	Fine to Medium SAND- Occasional Silty Sand Seams- Grayish Brown- Wet- Loose (SP)
31.5	555.5	Clayey ORGANIC SILT- Dark Gray- Medium (OL)
50.0	537.0	Fine SAND- Brownish Gray- Wet- Medium Dense (SP)
		END OF BORING AT 50.0 FEET.

Sample	Recovery (inches)	Blows per six inches	N-value	Dry density (pcf)	Moisture (%)	Hand pene. (ksf)
SB1	18	7 10 12	22			
SB2	18	2 2 2	4			
SB3	18	2 1 1	2			
SB4	18	2 2 2	4			
SB5	18	1 1 2	3		142	0.6
SB6	18	2 3 3	6			
SB7	18	3 3 4	7			
SB8	18	2 2 3	5		44	0.75
SB9	18	4 6 8	14			
SB10	18	3 4 6	10			
SB11	18	4 6 7	13			
SB12	18	5 7 8	15			

GROUNDWATER & BACKFILL INFORMATION

	Depth (ft)	Elev (ft)
DURING BORING:	6.5	580.5
AT END OF BORING:	4.3	582.7

BACKFILL METHOD: Auger Cuttings

NOTES:
1. The indicated stratification lines are approximate. In situ, the transition between materials may be gradual.
2. Wash water used in hollow-stem augers to prevent "blow-in" of borehole below a depth of 35 feet.
3. Surface capped with cold patch after backfilling the borehole.

BORING BR202

PROJECT NAME: City of South Haven Wastewater Improvements
PROJECT NUMBER: 073642.00
CLIENT: Abonmarche
PROJECT LOCATION: South Haven, Michigan
DATE STARTED: 1/28/16 **COMPLETED:** 1/28/16
BORING METHOD: Hollow-stem Augers
DRILLER: JC-GLD **RIG NO.:** CME 75
LOGGED BY: AJR **CHECKED BY:** JMK

SURFACE ELEVATION: 586± FT

Depth (ft)	Elev (ft)	PROFILE DESCRIPTION
0.2	585.8	2 inches of ASPHALT
1.0	585.0	PAVEMENT
		SAND and GRAVEL
3.5	582.5	FILL- Fine SAND- Brown- Moist to Wet- Medium Dense (SP-SM)
6.0	580.0	FILL- Concrete and Slag Pieces
8.0	578.0	FIBROUS PEAT- Black (PT)
14.0	572.0	Fine SAND with Silt- Frequent Fibrous Peat Layers and Seams- Brownish Gray- Wet- Very Loose (SP-SM0
16.0	570.0	LEAN CLAY- Gray -Soft (CL)
19.0	567.0	Fine to Medium SAND- Gray- Wet (SP)
27.5	558.5	SILTY CLAY- Grayish Brown- Very Stiff (CL/ML)
35.0	551.0	SILT- Brown- Wet- Dense (ML)
		END OF BORING AT 35.0 FEET.

Sample	Recovery (inches)	Blows per six inches	N-value	Moisture (%)	Shear strength (KSF)
SB1	18	4 7 10	17		
SB2	18	9 18 17	35		
SB3	18	3 2 2	4	>> 162	
SB4	18	1 1 2	3	>> 126	
SB5	18	3 1 1	2	37	0.3
SB6	18	3 3 3	6	24	▽
SB7	18	5 6 10	16	21	▽
SB8	18	11 20 24	44		
SB9	18	14 18 21	39		

The moisture content test at Sample SB4 was performed on a peat layer.

GROUNDWATER & BACKFILL INFORMATION

	Depth (ft)	Elev (ft)
▽ DURING BORING:	3.0	583.0
▼ AT END OF BORING:	3.3	582.7

BACKFILL METHOD: Auger Cuttings

NOTES: 1. The indicated stratification lines are approximate. In situ, the transition between materials may be gradual.
2. Surface capped with cold patch after backfilling the borehole.

BORING BR203

PROJECT NAME: City of South Haven Wastewater Improvements
PROJECT NUMBER: 073642.00
CLIENT: Abonmarche
PROJECT LOCATION: South Haven, Michigan
DATE STARTED: 1/28/16 **COMPLETED:** 1/28/16
BORING METHOD: Hollow-stem Augers
DRILLER: JC-GLD **RIG NO.:** CME 75
LOGGED BY: AJR **CHECKED BY:** JMK

SURFACE ELEVATION: 594± FT

ELEVATION (FEET)	DEPTH (FEET)	PROFILE DESCRIPTION		SAMPLE TYPE/NO. INTERVAL	RECOVERY LENGTH (INCHES)	BLOWS PER SIX INCHES	N-VALUE -- ○	DRY DENSITY (pcf) -- ■	MOISTURE & ATTERBERG LIMITS (%)	HAND PENE. ▽ / TORVANE SHEAR ⊠ / UNC.COMP. ○ / VANE SHEAR (PK) ⊡ / VANE SHEAR (REM) ⨯ / TRIAXIAL (UU) ⌖ SHEAR STRENGTH (KSF)	REMARKS
	0	0.2 2-1/2 inches of ASPHALT PAVEMENT	593.8								
		1.2	592.8								
		1.9 SAND and GRAVEL	592.1								
		3.2	590.8								
590		FILL- Fine SAND with Silt- Dark Brown- Moist (SP-SM)		SB1	18	9 9 9	18				
		FILL- Fine SAND- Occasional Sandy Clay Layers- Brown- Moist- Medium Dense (SP)		SB2	18	7 8 14	22	13		4.5+	
				SB3	18	6 7 10	17	13		4.5+	
	10			SB4	18	8 14 15	29	11		4.5+	
580		CLAYEY SILT- Occasional Fine Sand Layers- Brown Turning Gray Below 6.0 feet- Hard (ML)		SB5	18	7 12 16	28	16		4.5+	
	20			SB6	18	7 11 15	26	19		4.5+	
570		25.0	569.0	SB7	18	8 11 15	26	19		4.5+	
		END OF BORING AT 25.0 FEET.									
	30										
560											
	40										
550											
	50										

GROUNDWATER & BACKFILL INFORMATION

GROUNDWATER WAS NOT ENCOUNTERED

BACKFILL METHOD: Auger Cuttings

NOTES: 1. The indicated stratification lines are approximate. In situ, the transition between materials may be gradual.
2. Surface capped with cold patch after backfilling the borehole.

BORING BR204

PROJECT NAME: City of South Haven Wastewater Improvements
PROJECT NUMBER: 073642.00
CLIENT: Abonmarche
PROJECT LOCATION: South Haven, Michigan
DATE STARTED: 1/27/16 **COMPLETED:** 1/27/16
BORING METHOD: Hollow-stem Augers
DRILLER: JC-GLD **RIG NO.:** CME 75
LOGGED BY: AJR **CHECKED BY:** JMK

SURFACE ELEVATION: 583.5± FT

Depth (ft)	Elev (ft)	PROFILE DESCRIPTION
0.2	583.3	2-1/2 inches of ASPHALT PAVEMENT
1.2	582.3	SAND and GRAVEL
3.0	580.5	FILL- Fine SAND- Frequent Clay Layers- Brown- Moist- Medium Dense (SP)
4.5	579.0	FILL- Fine to Coarse SAND with Silt- Frequent Slag Pieces- Gray- Wet- Medium Dense (SP-SM)
6.0	577.5	Sandy ORGANIC SILT- Occasional Root Fibers and Shell Fragments- Dark Grayish Brown (OL)
8.5	575.0	Sandy AMORPHOUS PEAT- Frequent Roots and Wood Pieces- Black (PT)
17.0	566.5	ORGANIC SILT- Frequent Wood Pieces and Decayed Vegetation- Occasional Shell Fragments- Dark Gray- Soft (OL)
22.0	561.5	Clayey ORGANIC SILT- Occasional Root Fibers and Shell Fragments- Dark Brownish Gray- Soft (OL)
		Fine SAND- Brownish Gray to Gray- Wet- Very Loose to Medium Dense (SP)
50.0	533.5	END OF BORING AT 50.0 FEET.

Sample	Recovery (inches)	Blows per six inches	N-value
SB1	18	4 6 14	20
SB2	18	24 11 6	17
SB3	12	5 3 2	5
SB4	3	3 2 1	3
SB5	18	1 1 1	2
SB6	18	1 1 1	2
SB7	18	1 1 2	3
SB8	18	2 2 2	4
SB9	18	3 5 5	10
SB10	18	4 5 6	11
SB11	18	5 7 11	18
SB12	18	6 8 9	17

Dry density (pcf): 23 at 20.5 ft
Moisture & Atterberg limits (%): PL MC LL
Shear strength (KSF): 47 at 8.5 ft; 240 (0.4) at 10.5 ft; 212 (0.5) at 15.5 ft; 60 (0.4) at 20.5 ft

REMARKS

GROUNDWATER & BACKFILL INFORMATION

	Depth (ft)	Elev (ft)
DURING BORING:	3.0	580.5
AT END OF BORING:	1.8	581.7

BACKFILL METHOD: Auger Cuttings

NOTES:
1. The indicated stratification lines are approximate. In situ, the transition between materials may be gradual.
2. Wash water used in hollow-stem augers to prevent "blow-in" of borehole below a depth of 40 feet.
3. Surface capped with cold patch after backfilling the borehole.

BORING ML1

PROJECT NAME: City of South Haven - Various Utility Cores & Borings **PROJECT NUMBER:** 071718.00

CLIENT: The Abonmarche Group **PROJECT LOCATION:** South Haven, Michigan

DATE STARTED: 4/1/15 **COMPLETED:** 4/1/15 **BORING METHOD:** Hollow-stem Augers

DRILLER: TW-GLD **RIG NO.:** CME 75 **LOGGED BY:** EFG **CHECKED BY:** KJG

STATION: 320 Feet North of Dyckman Avenue
OFFSET: 4 Feet West of Centerline
ADDRESS: 144
STREET: Dunkley
LANE: Southbound
SURFACE ELEVATION: 582± FT

PROFILE DESCRIPTION

Depth (ft)	Description	Elevation (ft)
0.4	4 3/4 Inches of ASPHALT PAVEMENT	581.6
0.8	SAND and GRAVEL	581.2
4.5	FILL- Fine SAND- Brown- Moist- Loose (SP)	577.5
6.5	AMORPHOUS PEAT with Wood Pieces- Black (PT)	575.5
25.0	ORGANIC SILT- Frequent Root Fibers- Occasional Fine Sand Partings- Gray and Dark Brown- Soft (OL)	557.0

END OF BORING AT 25.0 FEET.

Sample	Recovery (inches)	Blows per six inches	N-value	Moisture (%)	Shear strength (KSF)
SB1	13	6 4 5	9		
SB2	10	3 3 3	6		
SB3	5	5 3 3	6		
SB4	12	2 2 2	4	>> 122	0.3
SB5	13	2 2 2	4	>> 129	0.3
SB6	13	2 1 2	3	>> 158	0.4
SB7	15	1 2 1	3	>> 190	0.4
SB8	15	2 2 2	4	>> 63	0.4
SB9	14	2 2 2	4	>> 81	0.4

Elevation (feet): 580, 570, 560, 550, 540
Depth (feet): 0, 10, 20, 30, 40, 50

N-VALUE -- ○ (10 20 30 40)
DRY DENSITY (pcf) -- ■ (90 100 110 120)
MOISTURE & ATTERBERG LIMITS (%) PL MC LL (10 20 30 40)
▽ HAND PENE. ⊠ TORVANE SHEAR ○ UNC.COMP. ⊡ VANE SHEAR (PK) × VANE SHEAR (REM) ⊕ TRIAXIAL (UU)
SHEAR STRENGTH (KSF) (1 2 3 4)

REMARKS

GROUNDWATER & BACKFILL INFORMATION

	DEPTH (FT)	ELEV (FT)
▽ **DURING BORING:**	4.5	577.5
▼ **AT END OF BORING:**	9.0	573.0
CAVE-IN OF BOREHOLE AT:	11.0	571.0

BACKFILL METHOD: Auger Cuttings

NOTES:
1. The indicated stratification lines are approximate. In situ, the transition between materials may be gradual.
2. Pavement core and Army Corps of Engineers DCP test performed at this location. Refer to Pavement Core Log and USACE DCP Data Sheet for this boring.
3. Surface capped wtih asphalt cold patch after backfilling the borehole.

BORING ML2

PAGE 1 OF 1

PROJECT NAME: City of South Haven - Various Utility Cores & Borings **PROJECT NUMBER:** 071718.00

CLIENT: The Abonmarche Group **PROJECT LOCATION:** South Haven, Michigan

DATE STARTED: 3/30/15 **COMPLETED:** 3/30/15 **BORING METHOD:** Hollow-stem Augers

DRILLER: TW-GLD **RIG NO.:** CME 75 **LOGGED BY:** ZLM **CHECKED BY:** KJG

SURFACE ELEVATION: 582± FT

Depth (ft)	Elevation (ft)	Profile Description	Sample Type/No.	Recovery Length (inches)	Blows per Six Inches	N-Value	Moisture & Atterberg Limits (%)	Dry Density (pcf)	Shear Strength (KSF)
0.5	581.5	6 Inches of TOPSOIL							
		FILL- Fine SAND with Silt- Occasional Topsoil Layers- Brown- Moist to Wet- Loose (SP-SM)	SB1	10	4 4 3	7			
			SB2	14	6 5 4	9			
			SB3	15	4 4 4	8			
			SB4	16	4 5 5	10			
11.0	571.0								
		Amorphous PEAT with Sand- Dark Brown to Black (PT)	SB5	13	3 3 3	6	>>	167	
			SB6	10	2 3 2	5	>>	122	
			SB7	12	1 2 2	4	>>	168	
18.0	564.0								
		ORGANIC SILT- Dark Gray- Soft (OL)	SB8	14	3 3 3	6	>>	129	0.3
25.0	557.0		SB9	15	3 3 3	6	>>	156	0.3
		END OF BORING AT 25.0 FEET.							

Elevation (feet): 580, 570, 560, 550, 540
Depth (feet): 0, 10, 20, 30, 40, 50

N-VALUE -- ○ (10 20 30 40)
DRY DENSITY (pcf) -- ■ (90 100 110 120)
MOISTURE & ATTERBERG LIMITS (%) PL MC LL (10 20 30 40)
▽ HAND PENE. ⊠ TORVANE SHEAR ○ UNC.COMP. ⊡ VANE SHEAR (PK) × VANE SHEAR (REM) ⊕ TRIAXIAL (UU)
SHEAR STRENGTH (KSF) (1 2 3 4)

REMARKS

GROUNDWATER & BACKFILL INFORMATION

	DEPTH (FT)	ELEV (FT)
▽ **DURING BORING:**	5.0	577.0
▼ **AT END OF BORING:**	3.3	578.7
CAVE-IN OF BOREHOLE AT:	4.5	577.5

BACKFILL METHOD: Auger Cuttings

NOTES: 1. The indicated stratification lines are approximate. In situ, the transition between materials may be gradual.

BORING ML3

PROJECT NAME: City of South Haven - Various Utility Cores & Borings **PROJECT NUMBER:** 071718.00

CLIENT: The Abonmarche Group **PROJECT LOCATION:** South Haven, Michigan

DATE STARTED: 3/30/15 **COMPLETED:** 3/30/15 **BORING METHOD:** Hollow-stem Augers

DRILLER: TW-GLD **RIG NO.:** CME 75 **LOGGED BY:** ZLM **CHECKED BY:** KJG

SURFACE ELEVATION: 583± FT

Depth (ft)	Elev (ft)	Profile Description	Sample Type/No.	Recovery Length (inches)	Blows per Six Inches	N-Value	Dry Density (pcf)	Moisture (%)	Shear Strength (KSF)	Remarks
0–1.0	583–582.0	TOPSOIL								
1.0–3.0	582.0–580.0	FILL- Fine SAND- Occasional Clay Seams- Brown- Moist- Loose (SP)	SB1	13	4 4 5	9				
			SB2	15	4 5 4	9		24		
3.0–13.5	580.0–569.5	FILL- Fine to Medium CLAYEY SAND- Occasional Glass and Roots- Trace Organics- Dark Brown- Moist to Wet- Loose to Medium Dense (SC)	SB3	12	3 4 4	8		28		
			SB4	2	9 7 6	13		17		Loss-on-Ignition (LOI) test performed indicates an organics content of about 2.1 percent.
			SB5	3	7 4 4	8				
13.5–24.5	569.5–558.5	ORGANIC SILT- Frequent Peat Seams and Root Fibers- Dark Brown and Gray- Soft (OL)	SB6	15	2 2 2	4			0.3	
			SB7	17	2 2 2	4			0.4	
			SB8	15	1 1 2	3				
24.5–45.0	558.5–538.0	Fine to Medium SAND- Brown- Wet- Loose to Medium Dense (SP)	SB9	15	2 3 4	7				
			SB10	17	5 4 5	9				
			SB11	16	4 5 6	11				
			SB12	12	4 6 4	10				
45.0	538.0		SB13	16	5 6 6	12				
		END OF BORING AT 45.0 FEET.								

GROUNDWATER & BACKFILL INFORMATION

	Depth (ft)	Elev (ft)
▽ **DURING BORING:**	8.5	574.5
▼ **AT END OF BORING:**	2.5	580.5
CAVE-IN OF BOREHOLE AT:	3.0	580.0

BACKFILL METHOD: Auger Cuttings

NOTES: 1. The indicated stratification lines are approximate. In situ, the transition between materials may be gradual.

BORING ML4

PROJECT NAME: City of South Haven - Various Utility Cores & Borings **PROJECT NUMBER:** 071718.00

CLIENT: The Abonmarche Group **PROJECT LOCATION:** South Haven, Michigan

DATE STARTED: 3/27/15 **COMPLETED:** 3/27/15 **BORING METHOD:** Hollow-stem Augers

DRILLER: TW-GLD **RIG NO.:** CME 75 **LOGGED BY:** ZLM **CHECKED BY:** KJG

SURFACE ELEVATION: 586± FT

Depth (ft)	Elev (ft)	Profile Description	Sample	Recovery (in)	Blows per 6 in	N-value	Moisture (%)	Remarks
0	584.8	TOPSOIL- Fine to Medium SILTY SAND- Dark Brown- Moist (SM)	SB1	8	2 3 4	7		
1.2	583.3	FILL- Fine to Medium SAND with Silt and Gravel- Brown- Moist- Loose (SP-SM)	SB2	18	6 9 7	16	13	Sample SB2 was too disturbed to perform a shear strength test.
2.7	582.0	TOPSOIL FILL- Fine Silty Sand- Black (SM)	SB3	12	7 4 4	8	21	
4.0	580.5	FILL- Sandy CLAYEY SILT- Frequent Topsoil Seams- Gray (ML/CL)	SB4	12	4 4 6	10		
5.5	576.6	FILL- CLAYEY SAND- Frequent Peat Layers and Wood Pieces- Dark Brown and Black- Moist to Wet- Loose (SC)	SB5	10	8 3 4	7		
9.4	573.5	FILL- Fine SAND with Silt- Frequent Wood Pieces- Brown- Wet- Loose (SP-SM)	SB6	12	4 2 2	4	>> 133 0.4	
12.5	566.5	ORGANIC SILT with Sand- Occasional Peat Layers- Wood Pieces from 12 1/2 Feet to 14 Feet- Dark Brown and Black- Soft (OL)	SB7	18	1 1 2	3	>> 198 0.3	
19.5	556.0	Fine SILTY SAND- Frequent Clay Seams- Gray- Wet- Loose (SM)	SB8	18	1 1 2	3	31	
30.0	548.0	Fine SAND- Gray- Wet- Medium Dense (SP)	SB9	18	2 2 2	4		
38.0	544.5	Fine to Medium SAND with Gravel- Gray- Wet- Medium Dense (SP)	SB10	18	5 4 6	10		
41.5	541.0	LEAN CLAY- Gray- Medium (CL)	SB11	18	4 5 6	11		
45.0		END OF BORING AT 45.0 FEET.	SB12	18	4 6 7	13		
			SB13	18	5 5 7	12	22	

Elevation (feet): 580, 570, 560, 550, 540
Depth (feet): 0, 10, 20, 30, 40, 50

Dry density (pcf) -- ■: 90 100 110 120
Moisture & Atterberg limits (%): PL MC LL; 10 20 30 40
Shear strength (KSF): 1 2 3 4
N-value -- ○: 10 20 30 40

▽ HAND PENE.
⊠ TORVANE SHEAR
○ UNC.COMP.
⊡ VANE SHEAR (PK)
× VANE SHEAR (REM)
⊕ TRIAXIAL (UU)

GROUNDWATER & BACKFILL INFORMATION

	Depth (ft)	Elev (ft)
▽ **DURING BORING:**	6.5	579.5
▼ **AT END OF BORING:**	5.8	580.2

BACKFILL METHOD: Auger Cuttings

NOTES: 1. The indicated stratification lines are approximate. In situ, the transition between materials may be gradual.

BORING ML5

PROJECT NAME: City of South Haven - Various Utility Cores & Borings **PROJECT NUMBER:** 071718.00

CLIENT: The Abonmarche Group **PROJECT LOCATION:** South Haven, Michigan

DATE STARTED: 3/30/15 **COMPLETED:** 3/30/15 **BORING METHOD:** Hollow-stem Augers

DRILLER: TW-GLD **RIG NO.:** CME 75 **LOGGED BY:** ZLM **CHECKED BY:** KJG

NORTHING: 0 FT
EASTING: 2 FT
SURFACE ELEVATION: 584± FT

PROFILE DESCRIPTION

Depth (ft)	Elevation (ft)	Description
0 – 2.0	582.0	TOPSOIL- Fine SILTY SAND with Gravel- Dark Brown- Moist- Loose (SM)
2.0 – 4.0	580.0	FILL- Fine SAND- Frequent Silt Partings- Light Brown- Moist to Wet- Loose (SP)
4.0 – 5.5	578.5	FILL- Fine CLAYEY SAND- Trace Organics- Dark Brown- Wet- Loose (SC)
5.5 – 8.5	575.5	TOPSOIL FILL- Fine SILTY SAND- Frequent Wood Pieces- Dark Brown- Wet- Medium Dense (SM)
8.5 – 24.0	560.0	ORGANIC SILT- Frequent Sand Partings and Root Fibers- Occasional Clay and Peat Layers- Dark Brown and Gray- Soft to Medium (OL)
24.0 – 40.0	544.0	Fine SAND with Silt- Gray- Wet- Loose to Medium Dense (SP-SM)
40.0		END OF BORING AT 40.0 FEET.

Sample	Recovery (inches)	Blows per six inches	N-value	Moisture (%)	Dry density (pcf)	Shear strength (KSF)	Remarks
SB1	12	4 4 4	8				
SB2	10	5 4 3	7	22			Loss-on-Ignition (LOI) test performed indicates an organics content of about 1.4 percent.
SB3	6	7 7 4	11	30			
SB4	13	3 3 3	6	>>		63 0.4	
SB5	14	4 3 3	6	>>		124 0.6	
SB6	13	2 2 2	4	>>		167 0.3	
SB7	12	2 1 2	3	>>		186 0.3	
SB8	14	1 1 1	2	>>		54 0.4	
SB9	15	1 2 2	4				
SB10	14	3 4 4	8				
SB11	15	4 4 5	9				
SB12	12	7 6 5	11				

GROUNDWATER & BACKFILL INFORMATION

	Depth (ft)	Elev (ft)
▽ **DURING BORING:**	4.0	580.0
▼ **AT END OF BORING:**	3.5	580.5
CAVE-IN OF BOREHOLE AT:	3.8	580.2

BACKFILL METHOD: Auger Cuttings

NOTES: 1. The indicated stratification lines are approximate. In situ, the transition between materials may be gradual.

BORING ML6

PROJECT NAME: City of South Haven - Various Utility Cores & Borings **PROJECT NUMBER:** 071718.00

CLIENT: The Abonmarche Group **PROJECT LOCATION:** South Haven, Michigan

DATE STARTED: 3/27/15 **COMPLETED:** 3/27/15 **BORING METHOD:** Hollow-stem Augers

DRILLER: JWC-GLD **RIG NO.:** CME 75 **LOGGED BY:** ZLM **CHECKED BY:** KJG

SURFACE ELEVATION: 583± FT

Depth (ft)	Elevation (ft)	Profile Description	Sample	Recovery (in)	Blows per 6 in	N-value	Dry Density (pcf)	Moisture	Atterberg (PL/MC/LL)	Shear Strength (ksf)	Remarks
0		FILL- Fine to Medium SILTY SAND- Frequent Glass and Wood Fragments- Trace to Some Organics and Clay Seams- Brown- Moist- Loose (SM)	SB1	18	3 3 3	6		44			Loss-on-Ignition (LOI) test performed indicates an organics content of about 10.7%.
3.0	580.0	Amorphous PEAT- Frequent Organic Silt Layers and Seams and Root Fibers- Occasional Sand Seams- Black (PT)	SB2	18	2 1 3	4		>>120			
6.5	576.5	ORGANIC SILT- Occastional Peat Seams and Sand Partings- Gray and Dark Brown- Soft (OL)	SB3	18	2 1 2	3		>>104		0.4	
12.0	571.0	Fine SAND with Silt- Occasional Wood Pieces- Gray- Wet- Loose (SP-SM)	SB4	18	1 1 1	2		>>222		0.4	
13.5	569.5	CLAYEY SILT with Sand- Occasional Silty Clay Layers- Gray and Brown- Soft (ML/CL)	SB5	18	1 2 4	6		>>161		0.5	
18.8	564.2	Fine SAND- Brown- Wet- Loose (SP)	SB6	18	2 1 1	2		39		0.5	
			SB7	18	3 1 1	2		35			Sample SB7 too disturbed to perform a shear strength test.
			SB8	18	2 3 4	7					
25.0	558.0	END OF BORING AT 25.0 FEET.	SB9	18	4 4 5	9					

GROUNDWATER & BACKFILL INFORMATION

	DEPTH (FT)	ELEV (FT)
▽ **DURING BORING:**	6.3	576.7
▼ **AT END OF BORING:**	3.3	579.7

BACKFILL METHOD: Auger Cuttings

NOTES: 1. The indicated stratification lines are approximate. In situ, the transition between materials may be gradual.

BORING ML7

PROJECT NAME: City of South Haven - Various Utility Cores & Borings **PROJECT NUMBER:** 071718.00

CLIENT: The Abonmarche Group **PROJECT LOCATION:** South Haven, Michigan

DATE STARTED: 3/27/15 **COMPLETED:** 3/27/15 **BORING METHOD:** Hollow-stem Augers

DRILLER: JWC-GLD **RIG NO.:** CME 75 **LOGGED BY:** ZLM **CHECKED BY:** KJG

SURFACE ELEVATION: 583± FT

Depth (ft)	Elevation (ft)	Profile Description	Sample Type/No.	Recovery Length (inches)	Blows per Six Inches	N-Value	Dry Density (pcf)	Moisture & Atterberg Limits (%)	Shear Strength (ksf)	Remarks
0 – 3.0	583 – 580.0	FILL- Fine to Medium SILTY SAND- Occasional Slag and Cobbles- Brown- Moist to Wet- Medium Dense (SM)	SB1	18	4 6 10	16	20			Loss-on-Ignition (LOI) test performed on SB1 indicates an organics content of about 6.9%. Foreign odor noted at SB2. Moisture content and LOI test performed on an organic silt layer. LOI = 16.4%. Foreign odor noted at SB3.
3.0 – 9.0	580.0 – 574.0	FILL- Fine to Medium SILTY SAND- Frequent Organic Silt Layers, Glass, Metal, and Cinders- Brown to Dark Brown- Wet- Loose (SM)	SB2	2	4 2 2	4				
			SB3	8	5 3 3	6		>>	78	
			SB4	2	1 1 1	2				
9.0 – 14.0	574.0 – 569.0	Amorphous PEAT- Frequent Organic Silt Layers- Occasional Wood and Shell Fragments- Black (PT)	SB5	18	2 1 1	2		>>	271	
			SB6	13	2 3 2	5		>>	105	
14.0 – 15.5	569.0 – 567.5	Fine SAND with Silt- Occasional Wood Fragments- Brown- Wet- Loose (SP-SM)	SB7	18	4 4 2	6				
15.5 – 18.0	567.5 – 565.0	Fine SAND- Gray- Wet- Loose (SP)	SB8	18	2 2 2	4		>>	51 / 0.75	
18.0 – 22.0	565.0 – 561.0	SILTY CLAY- Gray- Medium (CL/ML)								
22.0 – 25.0	561.0 – 558.0	Fine SILTY SAND- Light Brown- Wet- Medium Dense (SM)	SB9	18	6 6 6	12				
25.0	558.0	END OF BORING AT 25.0 FEET.								

GROUNDWATER & BACKFILL INFORMATION

	DEPTH (FT)	ELEV (FT)
▽ **DURING BORING:**	3.2	579.8
▼ **AT END OF BORING:**	2.0	581.0

BACKFILL METHOD: Auger Cuttings

NOTES: 1. The indicated stratification lines are approximate. In situ, the transition between materials may be gradual.

BORING ML8

PROJECT NAME: City of South Haven - Various Utility Cores & Borings **PROJECT NUMBER:** 071718.00

CLIENT: The Abonmarche Group **PROJECT LOCATION:** South Haven, Michigan

DATE STARTED: 4/1/15 **COMPLETED:** 4/1/15 **BORING METHOD:** Hollow-stem Augers

DRILLER: TW-GLD **RIG NO.:** CME 75 **LOGGED BY:** ZLM **CHECKED BY:** KJG

SURFACE ELEVATION: 582± FT

Depth (ft)	Elev. (ft)	Profile Description	Sample	Recovery (in)	Blows per 6 in	N-value
0.8	581.2	10 Inches of TOPSOIL				
1.0	581.0	SAND and GRAVEL	SB1	12	4 3 3	6
3.0	579.0	FILL- Fine SILTY SAND- Occasional Topsoil Layers- Dark Brown- Moist- Loose (SM)	SB2	13	3 3 2	5
6.0	576.0	FILL- Fine SILTY SAND- Occasional Roots- Brown- Moist to Wet- Loose (SM)	SB3	14	2 2 2	4
9.0	573.0	ORGANIC SILT with Sand- Frequent Roots- Dark Brown (OL)	SB4	15	2 3 4	7
		Fine SAND- Occasional Organic Sandy Silt Layers- Gray- Wet- Loose (SP)	SB5	13	4 4 5	9
			SB6	15	4 4 5	9
			SB7	12	5 4 4	8
			SB8	13	3 3 4	7
25.0	557.0		SB9	10	3 4 3	7

END OF BORING AT 25.0 FEET.

Dry density (pcf) -- ■ (90 100 110 120); Moisture & Atterberg limits (%) PL MC LL (10 20 30 40); Shear strength (KSF) (1 2 3 4): >> 55

Legend: ▽ HAND PENE. ⊠ TORVANE SHEAR ○ UNC.COMP. ⊡ VANE SHEAR (PK) × VANE SHEAR (REM) ⊕ TRIAXIAL (UU)

REMARKS

GROUNDWATER & BACKFILL INFORMATION

	DEPTH (FT)	ELEV (FT)
▽ **DURING BORING:**	3.5	578.5
▼ **AT END OF BORING:**	2.4	579.6
CAVE-IN OF BOREHOLE AT:	4.0	578.0

BACKFILL METHOD: Auger Cuttings

NOTES: 1. The indicated stratification lines are approximate. In situ, the transition between materials may be gradual.

BORING ML201

PROJECT NAME: City of South Haven Wastewater Improvements
PROJECT NUMBER: 073642.00
CLIENT: Abonmarche
PROJECT LOCATION: South Haven, Michigan
DATE STARTED: 1/27/16 **COMPLETED:** 1/27/16
BORING METHOD: Hollow-stem Augers
DRILLER: JC-GLD **RIG NO.:** CME 75
LOGGED BY: AJR **CHECKED BY:** JMK

SURFACE ELEVATION: 582± FT

Depth (ft)	Elevation (ft)	Profile Description	Sample	Recovery (in)	Blows per 6 in	N-value	Dry density (pcf)	Moisture (%)	Shear strength (ksf)	Remarks
0.3	581.7	4 inches of ASPHALT PAVEMENT								
1.3	580.7	SAND and GRAVEL	SB1	18	9 9 9	18				
4.0	578.0	FILL- Fine to Medium SAND- Frequent Silty Sand Layers- Occasional Wood Pieces- Brown- Moist to Wet- Medium Dense (SP)	SB2	18	6 3 3	6		>>	242	
5.5	576.5		SB3	18	2 1 1	2		49	0.4	
8.0	574.0	AMORPHOUS PEAT- Frequent Wood Pieces- Black (PT)	SB4	18	1 1 1	2		>>	140 0.4	
10		Clayey ORGANIC SILT- Frequent Wood Pieces and Root Fibers- Dark Gray- Soft (OL)								
		ORGANIC SILT- Frequent Wood Pieces and Decayed Vegetation- Dark Brown- Soft to Medium (OL)	SB5	18	1 1 1	2		>>	169 0.6	
18.5	563.5		SB6	18	1 1 1	2		>>	69 0.2	
20		Clayey ORGANIC SILT- Frequent Root Fibers- Dark Gray- Very Soft to Soft (OL)	SB7	18	1 2 2	4		>>	55 0.3	
27.0	555.0									
		Sandy ORGANIC SILT- Dark Brown (OL)	SB8	18	2 3 3	6		>>	55	
30 / 31.0	551.0									
		Fine SAND- Gray- Wet- Loose to Medium Dense (SP)	SB9	18	2 2 2	4				
40 / 40.5	541.5		SB10	18	2 5 6	11				
		SANDY SILT- Frequent Clay Layers and Seams from 47.0 feet to 50.0 feet- Gray- Wet- Dense (ML)	SB11	12	11 18 19	37				
50.0	532.0		SB12	12	14 21 27	48				
50		END OF BORING AT 50.0 FEET.								

Elevation (feet): 580, 570, 560, 550, 540

Depth (feet): 0, 10, 20, 30, 40, 50

N-value -- ○ (10 20 30 40)

Dry density (pcf) -- ■ (90 100 110 120)

Moisture & Atterberg limits (%) PL MC LL (10 20 30 40)

Shear strength (ksf) (1 2 3 4): ▽ Hand pene. ⊠ Torvane shear ○ Unc.comp. ⊡ Vane shear (PK) × Vane shear (rem) ⊕ Triaxial (UU)

GROUNDWATER & BACKFILL INFORMATION

	Depth (ft)	Elev (ft)
▽ **DURING BORING:**	2.3	579.7
▼ **AT END OF BORING:**	3.2	578.8

BACKFILL METHOD: Auger Cuttings

NOTES: 1. The indicated stratification lines are approximate. In situ, the transition between materials may be gradual.
2. Surface capped with cold patch after backfilling the borehole.

BORING ML202

PROJECT NAME: City of South Haven Wastewater Improvements
PROJECT NUMBER: 073642.00
CLIENT: Abonmarche
PROJECT LOCATION: South Haven, Michigan
DATE STARTED: 1/26/16 **COMPLETED:** 1/26/16
BORING METHOD: Hollow-stem Augers
DRILLER: JC-GLD **RIG NO.:** CME 75
LOGGED BY: AJR **CHECKED BY:** JMK

SURFACE ELEVATION: 582.5± FT

Depth (ft)	Elevation (ft)	Profile Description	Sample Type/No.	Recovery Length (inches)	Blows per Six Inches	N-Value	Dry Density (pcf)	Moisture (%)	Shear Strength (KSF)	Remarks
0.3	582.2	4 inches of ASPHALT PAVEMENT								
1.6	580.9	FILL- Fine to Coarse SAND with Silt and Gravel- Brown- Moist (SP-SM)	SB1	18	8 10 9	19				
			SB2	18	4 4 3	7				
5.5	577.0	FILL- Fine SILTY SAND- Grayish Brown- Moist to Wet- Medium Dense to Loose (SM)	SB3	18	2 1 2	3		>>	69 / 0.5	
8.0	574.5	Clayey ORGANIC SILT- Frequent Root Fibers- Dark Grayish Brown- Medium (OL)	SB4	18	2 1 2	3		>>	197	
12.0	570.5	Wood Pieces with Sand- Black and Gray								
		Clayey ORGANIC SILT- Frequent Shell Fragments- Black- Soft (OL)	SB5	18	1 2 2	4		>>	112 / 0.4	
17.0	565.5									
		ORGANIC SILT with Clay- Black- Medium (OL)	SB6	18	1 1 1	2		>>	158 / 0.6	
21.0	561.5									
		Fine SAND with Silt- Frequent Sandy Silt Layers- Dark Gray- Wet- Very Loose (SP-SM)	SB7	18	1 1 1	2				
27.0	555.5									
		Fine to Medium SAND with Silt and Gravel- Grayish Brown- Wet- Dense (SP-SM)	SB8	18	5 11 20	31				
			SB9	18	12 15 21	36				
37.0	545.5									
		LEAN CLAY- Occasional Sand Layers- Gray- Hard to Very Stiff (CL)	SB10	18	7 11 17	28	22		4.5+	
45.0	537.5		SB11	18	10 16 21	37	20			
		END OF BORING AT 45.0 FEET.								

Elevation (feet): 580, 570, 560, 550, 540
Depth (feet): 0, 10, 20, 30, 40, 50

N-value scale: 10 20 30 40
Moisture & Atterberg limits (%): PL MC LL; 10 20 30 40
Dry density (pcf): 90 100 110 120
Shear strength (KSF): 1 2 3 4
Symbols: ▽ HAND PENE. ⊠ TORVANE SHEAR ○ UNC.COMP. ⊡ VANE SHEAR (PK) × VANE SHEAR (REM) ⊕ TRIAXIAL (UU)

GROUNDWATER & BACKFILL INFORMATION

	Depth (ft)	Elev (ft)
▽ **DURING BORING:**	3.0	579.5
▼ **AT END OF BORING:**	3.7	578.8

BACKFILL METHOD: Auger Cuttings

NOTES:
1. The indicated stratification lines are approximate. In situ, the transition between materials may be gradual.
2. Wash water used in hollow-stem augers to prevent "blow-in" of borehole below a depth of 35 feet.
3. Surface capped with cold patch after backfilling the borehole.

BORING ML203

PROJECT NAME: City of South Haven Wastewater Improvements
PROJECT NUMBER: 073642.00
CLIENT: Abonmarche
PROJECT LOCATION: South Haven, Michigan
DATE STARTED: 1/25/16 **COMPLETED:** 1/25/16
BORING METHOD: Hollow-stem Augers
DRILLER: TW-GLD **RIG NO.:** CME 75
LOGGED BY: AJR **CHECKED BY:** JMK

SURFACE ELEVATION: 583± FT

Depth (ft)	Elevation (ft)	Profile Description	Sample Type/No.	Recovery Length (inches)	Blows per Six Inches	N-Value	Dry Density (pcf)	Moisture (%)	Shear Strength (KSF)	Remarks
0.5	582.5	6 inches of TOPSOIL								
0.5–7.5	582.5–575.5	FILL- Fine SAND- Frequent Silty Sand Layers and Seams- Brown -Moist to Wet- Medium Dense (SP)	SB1	16	6 6 5	11				
			SB2	15	4 5 5	10				
			SB3	6	7 5 5	10				
7.5–11.0	575.5–572.0	Sandy FIBROUS PEAT- Black (PT)	SB4	4	3 3 3	6		>> 168		
11.0–18.5	572.0–564.5	ORGANIC SILT- Frequent Decayed Vegetation and Roots- Dark Grayish Brown- Soft (OL)	SB5	14	3 2 2	4		>> 197	0.5	
18.5–24.0	564.5–559.0	Clayey ORGANIC SILT- Frequent Root Fibers- Dark Brownish Gray- Soft (OL)	SB6	15	2 3 3	6		44	0.4	
24.0–27.0	559.0–556.0	Fine SAND- Frequent Silty Sand Layers and Seams- Brownish Gray- Wet- Loose (SP)	SB7	12	3 4 6	10				
27.0–38.0	556.0–545.0	Fine to Medium SAND- Occasional Silty Sand Layers and Seams- Brownish Gray- Wet- Medium Dense (SP)	SB8	16	5 5 6	11				
			SB9	14	6 7 9	16				
38.0–40.0	545.0–543.0	Fine SILTY SAND- Gray- Wet- Medium Dense (SM)	SB10	12	8 9 10	19				
40.0–45.0	543.0–538.0	CLAYEY SILT- Gray- Stiff (ML)	SB11	11	12 10 5	15	30		1.1	
45.0	538.0	END OF BORING AT 45.0 FEET.								

Elevation (ft): 580, 570, 560, 550, 540
Depth (ft): 0, 10, 20, 30, 40, 50

N-VALUE -- ○ (10 20 30 40)
DRY DENSITY (pcf) -- ■ (90 100 110 120)
MOISTURE & ATTERBERG LIMITS (%) PL MC LL (10 20 30 40)
▽ HAND PENE. ⊠ TORVANE SHEAR ○ UNC.COMP. ⊡ VANE SHEAR (PK) × VANE SHEAR (REM) ⊕ TRIAXIAL (UU)
SHEAR STRENGTH (KSF) (1 2 3 4)

GROUNDWATER & BACKFILL INFORMATION

	DEPTH (FT)	ELEV (FT)
▽ **DURING BORING:**	7.0	576.0
▼ **AT END OF BORING:**	4.3	578.7
CAVE-IN OF BOREHOLE AT:	9.8	573.2

BACKFILL METHOD: Auger Cuttings

NOTES: 1. The indicated stratification lines are approximate. In situ, the transition between materials may be gradual.

BORING ML204

PROJECT NAME: City of South Haven Wastewater Improvements
PROJECT NUMBER: 073642.00
CLIENT: Abonmarche
PROJECT LOCATION: South Haven, Michigan
DATE STARTED: 1/26/16 **COMPLETED:** 1/26/16
BORING METHOD: Hollow-stem Augers
DRILLER: JC-GLD **RIG NO.:** CME 75
LOGGED BY: AJR **CHECKED BY:** JMK

SURFACE ELEVATION: 582± FT

Depth (ft)	Elevation (ft)	Profile Description	Sample Type/No.	Recovery (in)	Blows per Six Inches	N-Value	Dry Density (pcf)	Moisture (%)	Shear Strength (KSF)
0.6	581.4	FILL- Sand and GRAVEL							
3.0	579.0	FILL- Fine SAND- Brown- Moist- Medium Dense (SP)	SB1	12	3 7 8	15			
		FILL- Fine SILTY SAND- Occasional Glass, Metal, and Tile Pieces- Occasional Organic Soil with Roots Layers and Seams- Dark Brown- Wet- Medium Dense to Loose (SM)	SB2	12	5 8 5	13			
			SB3	8	6 3 3	6		47	
9.5	572.5		SB4	6	6 5 2	7		80	
		ORGANIC SILT- Frequent Decayed Vegetation and Roots- Dark Brown and Black- Soft (OL)	SB5	15	3 1 2	3		175	0.5
			SB6	18	2 1 2	3		154	0.5
22.5	559.5								
		Fine SAND- Occasional Silty Sand Layers- Brownish Gray- Wet- Loose to Medium Dense (SP)	SB7	18	2 3 2	5			
			SB8	18	4 5 5	10			
			SB9	18	7 8 7	15			
			SB10	12	6 6 7	13			
42.0	540.0								
		CLAYEY SILT- Gray- Stiff (ML)	SB11	12	6 7 7	14	22		
45.0	537.0	END OF BORING AT 45.0 FEET.							

Elevation (ft): 580, 570, 560, 550, 540
Depth (ft): 0, 10, 20, 30, 40, 50

N-VALUE -- ○ (10 20 30 40)
DRY DENSITY (pcf) -- ■ (90 100 110 120)
MOISTURE & ATTERBERG LIMITS (%) (PL MC LL) (10 20 30 40)
▽ HAND PENE. ⊠ TORVANE SHEAR ○ UNC.COMP. ⊡ VANE SHEAR (PK) × VANE SHEAR (REM) ⊕ TRIAXIAL (UU)
SHEAR STRENGTH (KSF) (1 2 3 4)

REMARKS

GROUNDWATER & BACKFILL INFORMATION

	DEPTH (FT)	ELEV (FT)
▽ **DURING BORING:**	3.0	579.0
▼ **AT END OF BORING:**	1.8	580.2

BACKFILL METHOD: Auger Cuttings

NOTES: 1. The indicated stratification lines are approximate. In situ, the transition between materials may be gradual.
2. Wash water used in hollow-stem augers to prevent "blow-in" of borehole below a depth of 30 feet.

BORING ML205

PROJECT NAME: City of South Haven Wastewater Improvements
PROJECT NUMBER: 073642.00
CLIENT: Abonmarche
PROJECT LOCATION: South Haven, Michigan
DATE STARTED: 1/21/16 **COMPLETED:** 1/21/16
BORING METHOD: Hollow-stem Augers
DRILLER: TW-GLD **RIG NO.:** CME 75
LOGGED BY: AJR **CHECKED BY:** JMK

SURFACE ELEVATION: 583± FT

Depth (ft)	Elev (ft)	PROFILE DESCRIPTION
1.3	581.7	15 inches of TOPSOIL
4.0	579.0	FILL- Sandy LEAN CLAY- Brown- Hard (CL)
5.5	577.5	FILL- Fine SAND with Silt- Frequent Silty Sand and Clayey Sand Layers- Occasional Wood Pieces- Gray- Moist to Wet- Loose (SM)
13.0	570.0	FILL- Sandy SILTY CLAY- Frequent Glass Fragments- Occasional Root Fibers- Dark Gray and Black- Stiff (CL/ML)
24.0	559.0	ORGANIC SILT- Frequent Roots and Root Fibers- Brownish Gray- Soft (OL)
28.0	555.0	Fine SILTY SAND- Brownish Gray- Wet- Loose (SM)
32.0	551.0	Fine SAND with Silt- Frequent Silty Sand Layers- Brownish Gray- Wet- Loose (SP-SM)
45.0	538.0	Fine SAND- Gray- Wet- Medium Dense (SP)
		END OF BORING AT 45.0 FEET.

Sample	Recovery (inches)	Blows per six inches	N-value	Dry density (pcf)	Moisture	Atterberg PL	Atterberg LL	Hand pene.	Torvane shear	Vane shear (PK)	Vane shear (REM)	Triaxial (UU)
SB1	10	6 6 7	13		12			4.5+				
SB2	12	4 4 5	9									
SB3	11	3 4 4	8		29							
SB4	0	4 3 4	7		27							
SB5	8	2 3 3	6		>>				0.3	185		
SB6	13	2 2 2	4		>>				0.3	90		
SB7	11	2 3 3	6									
SB8	14	3 4 5	9									
SB9	13	5 7 7	14									
SB10	12	5 5 6	11									
SB11	14	5 6 10	16									

REMARKS: No Sample recovery at Sample SB4. Driller submitted an auger sample for classification purposes. A shear strength test was not obtained due to sample disturbance.

GROUNDWATER & BACKFILL INFORMATION

	DEPTH (FT)	ELEV (FT)
▽ **DURING BORING:**	5.0	578.0
▼ **AT END OF BORING:**	3.5	579.5
CAVE-IN OF BOREHOLE AT:	15.6	567.4

BACKFILL METHOD: Auger Cuttings

NOTES: 1. The indicated stratification lines are approximate. In situ, the transition between materials may be gradual.

BORING ML206

PROJECT NAME: City of South Haven Wastewater Improvements
PROJECT NUMBER: 073642.00
CLIENT: Abonmarche
PROJECT LOCATION: South Haven, Michigan
DATE STARTED: 1/25/16 **COMPLETED:** 1/25/16
BORING METHOD: Hollow-stem Augers
DRILLER: TW-GLD **RIG NO.:** CME 75
LOGGED BY: AJR **CHECKED BY:** JMK

SURFACE ELEVATION: 582± FT

Depth (ft)	Elevation (ft)	Profile Description	Sample Type/No.	Recovery Length (inches)	Blows per Six Inches	N-Value	Moisture & Atterberg Limits (%)	Dry Density (pcf)	Shear Strength (KSF)	Remarks
0.5	581.5	6 inches of TOPSOIL								
4.0	578.0	FILL- Fine to Medium SILTY SAND with Gravel- Brown and Dark Brown- Moist to Wet- Medium Dense (SM)	SB1	10	11 10 8	18				
5.5	576.5	FILL- Fine SILTY SAND- Gray- Wet- Medium Dense (SM)	SB2	11	7 7 5	12				
8.0	574.0	Fine SAND- Grayish Brown- Wet- Loose (SP)	SB3	9	4 4 5	9				
13.5	568.5	Fine SAND with Silt- Frequent Silty Sand Layers and Seams- Gray and Dark Gray- Wet- Loose (SP-SM)	SB4	15	3 4 5	9				
18.0	564.0	Fine SAND- Brownish Gray- Wet- Medium Dense (SP)	SB5	16	4 5 6	11				
28.5	553.5	Clayey ORGANIC SILT- Occasional Root Fibers- Dark Brownish Gray- Medium (OL)	SB6	15	3 4 4	8	>>	80	0.5	
			SB7	16	4 5 6	11	>>	71	0.6	
40.0	542.0	Fine SAND- Gray- Wet- Medium Dense (SP)	SB8	14	5 4 6	10				
			SB9	15	5 5 7	12				
			SB10	11	8 7 6	13				
40		END OF BORING AT 40.0 FEET.								

Elevation (feet): 580, 570, 560, 550, 540
Depth (feet): 0, 10, 20, 30, 40, 50

N-value -- ○ (10 20 30 40)
Dry density (pcf) -- ■ (90 100 110 120)
Moisture & Atterberg limits (%) PL MC LL (10 20 30 40)
▽ Hand pene. ⊠ Torvane shear ○ Unc.comp. ⊡ Vane shear (PK) × Vane shear (rem) ⊕ Triaxial (UU)
Shear strength (KSF) (1 2 3 4)

GROUNDWATER & BACKFILL INFORMATION

	Depth (ft)	Elev (ft)
▽ **During boring:**	3.5	578.5
▼ **At end of boring:**	3.6	578.4
Cave-in of borehole at:	12.0	570.0

Backfill method: Auger Cuttings

NOTES: 1. The indicated stratification lines are approximate. In situ, the transition between materials may be gradual.

BORING ML207

PROJECT NAME: City of South Haven Wastewater Improvements
PROJECT NUMBER: 073642.00
CLIENT: Abonmarche
PROJECT LOCATION: South Haven, Michigan
DATE STARTED: 1/21/16 **COMPLETED:** 1/21/16
BORING METHOD: Hollow-stem Augers
DRILLER: TW-GLD **RIG NO.:** CME 75
LOGGED BY: AJR **CHECKED BY:** JMK

SURFACE ELEVATION: 583± FT

Elevation (feet)	Depth (feet)	Profile Description	Sample Type/No.	Recovery Length (inches)	Blows per Six Inches	N-value	Remarks
	0.8	TOPSOIL (582.2)					
580	4.5	FILL- Fine SILTY SAND- Brown to Black at 4.5 feet- Moist- Medium Dense (SM) (578.5)	SB1	12	5 6 7	13	
			SB2	13	5 5 4	9	
	12.0	FILL- Fine SILTY SAND- Occasional Metal, Cinders, Glass, Brick, and Wood Pieces- Black- Moist to Wet- Loose to Medium Dense (SM) (571.0)	SB3	14	3 4 4	8	
			SB4	4	12 6 6	12	
570	17.0	Fine SAND with Silt- Brownish Gray- Wet- Medium Dense (SP-SM) (566.0)	SB5	2	11 11 8	19	
	23.5	Fine SILTY SAND- Brownish Gray- Wet- Medium Dense (SM) (559.5)	SB6	12	5 5 6	11	
560	27.0	Sandy ORGANIC SILT- Occasional Wood Pieces- Gray (OL) (556.0)	SB7	4	3 3 3	6	35
	34.0	ORGANIC SILT- Frequent Root Fibers- Occasional Sand Layers- Gray (OL) (549.0)	SB8	15	3 3 3	6	>>97
550	40.0	Fine SILTY SAND- Brownish Gray- Wet- Medium Dense (SM) (543.0)	SB9	11	4 6 6	12	>>66
			SB10	12	5 5 7	12	
	40	END OF BORING AT 40.0 FEET.					
540							

Symbolic profile: 0.8–4.5 fill; 4.5–12.0 fill; 12.0–17.0 sand; 17.0–23.5 sand; 23.5–27.0 organic silt; 27.0–34.0 organic silt; 34.0–40.0 sand.

Dry density (pcf) -- ■ (90 100 110 120); Moisture & Atterberg limits (%) PL MC LL (10 20 30 40); Shear strength (KSF) (1 2 3 4): ▽ Hand pene. ⊠ Torvane shear ○ Unc.comp. ⊡ Vane shear (pk) × Vane shear (rem) ⊕ Triaxial (UU)

GROUNDWATER & BACKFILL INFORMATION

	Depth (ft)	Elev (ft)
▽ **During Boring:**	8.5	574.5
▼ **At End of Boring:**	3.6	579.4
Cave-in of Borehole at:	8.6	574.4

Backfill Method: Auger Cuttings

NOTES: 1. The indicated stratification lines are approximate. In situ, the transition between materials may be gradual.

BORING ML208

PROJECT NAME: City of South Haven Wastewater Improvements
PROJECT NUMBER: 073642.00
CLIENT: Abonmarche
PROJECT LOCATION: South Haven, Michigan
DATE STARTED: 1/25/16 **COMPLETED:** 1/25/16
BORING METHOD: Hollow-stem Augers
DRILLER: TW-GLD **RIG NO.:** CME 75
LOGGED BY: AJR **CHECKED BY:** JMK

SURFACE ELEVATION: 583± FT

Depth (ft)	Elevation (ft)	PROFILE DESCRIPTION
0.4	582.6	4-1/2 inches of ASPHALT PAVEMENT
1.0	582.0	GRAVEL
1.5	581.5	FILL- Fine to Medium SAND with Silt- Frequent Sandy Clay Seams- Brown- Moist (SP-SM)
3.0	580.0	FILL- Fine to Medium SILTY SAND- Occasional Cinders and Slag Pieces- Black- Moist- Medium Dense (SM)
5.5	577.5	Sandy ORGANIC SILT- Occasional Root Fibers and Shell Fragments- Dark Brown (OL)
8.0	575.0	Clayey ORGANIC SILT- Frequent Sandy Silt Layers and Seams- Occasional Root Fibers- Dark Brown (OL)
13.0	570.0	ORGANIC CLAY- Occasional Root Fibers- Gray- Medium (OL)
		Fine SAND- Light Brown- Wet- Medium Dense (SP)
24.0	559.0	LEAN CLAY- Brown- Stiff to Very Stiff (CL)
30.0	553.0	END OF BORING AT 30.0 FEET.

Sample	Recovery (inches)	Blows per six inches	N-value	Dry density (pcf)	Moisture (%)	Shear strength (KSF)
SB1	11	12 12 10	22			
SB2	12	4 4 4	8		32	
SB3	10	3 4 4	8		>>	54
SB4	7	1 2 3	5		32	0.8
SB5	10	6 6 8	14			
SB6	5	5 6 7	13			
SB7	12	6 8 9	17		28	
SB8	11	9 10 13	23		23	

GROUNDWATER & BACKFILL INFORMATION

	Depth (ft)	Elev (ft)
DURING BORING:	7.0	576.0
AT END OF BORING:	4.5	578.5
CAVE-IN OF BOREHOLE AT:	11.2	571.8

BACKFILL METHOD: Auger Cuttings

NOTES: 1. The indicated stratification lines are approximate. In situ, the transition between materials may be gradual.
2. Surface capped with cold patch after backfilling the borehole.

APPENDIX B

IMPORTANT INFORMATION ABOUT YOUR GEOTECHNICAL ENGINEERING REPORT
GENERAL COMMENTS
LABORATORY TESTING PROCEDURES

© 2016 SME

Important Information about This

Geotechnical-Engineering Report

Subsurface problems are a principal cause of construction delays, cost overruns, claims, and disputes.

While you cannot eliminate all such risks, you can manage them. The following information is provided to help.

Geotechnical Services Are Performed for Specific Purposes, Persons, and Projects

Geotechnical engineers structure their services to meet the specific needs of their clients. A geotechnical-engineering study conducted for a civil engineer may not fulfill the needs of a constructor — a construction contractor — or even another civil engineer. Because each geotechnical- engineering study is unique, each geotechnical-engineering report is unique, prepared *solely* for the client. No one except you should rely on this geotechnical-engineering report without first conferring with the geotechnical engineer who prepared it. *And no one — not even you* — should apply this report for any purpose or project except the one originally contemplated.

Read the Full Report

Serious problems have occurred because those relying on a geotechnical-engineering report did not read it all. Do not rely on an executive summary. Do not read selected elements only.

Geotechnical Engineers Base Each Report on a Unique Set of Project-Specific Factors

Geotechnical engineers consider many unique, project-specific factors when establishing the scope of a study. Typical factors include: the client's goals, objectives, and risk-management preferences; the general nature of the structure involved, its size, and configuration; the location of the structure on the site; and other planned or existing site improvements, such as access roads, parking lots, and underground utilities. Unless the geotechnical engineer who conducted the study specifically indicates otherwise, do not rely on a geotechnical-engineering report that was:

- not prepared for you;
- not prepared for your project;
- not prepared for the specific site explored; or
- completed before important project changes were made.

Typical changes that can erode the reliability of an existing geotechnical-engineering report include those that affect:

- the function of the proposed structure, as when it's changed from a parking garage to an office building, or from a light-industrial plant to a refrigerated warehouse;
- the elevation, configuration, location, orientation, or weight of the proposed structure;
- the composition of the design team; or
- project ownership.

As a general rule, *always* inform your geotechnical engineer of project changes—even minor ones—and request an assessment of their impact. *Geotechnical engineers cannot accept responsibility or liability for problems that occur because their reports do not consider developments of which they were not informed.*

Subsurface Conditions Can Change

A geotechnical-engineering report is based on conditions that existed at the time the geotechnical engineer performed the study. *Do not rely on a geotechnical-engineering report whose adequacy may have been affected by*: the passage of time; man-made events, such as construction on or adjacent to the site; or natural events, such as floods, droughts, earthquakes, or groundwater fluctuations. *Contact the geotechnical engineer before applying this report to determine if it is still reliable.* A minor amount of additional testing or analysis could prevent major problems.

Most Geotechnical Findings Are Professional Opinions

Site exploration identifies subsurface conditions only at those points where subsurface tests are conducted or samples are taken. Geotechnical engineers review field and laboratory data and then apply their professional judgment to render an opinion about subsurface conditions throughout the site. Actual subsurface conditions may differ — sometimes significantly — from those indicated in your report. Retaining the geotechnical engineer who developed your report to provide geotechnical-construction observation is the most effective method of managing the risks associated with unanticipated conditions.

A Report's Recommendations Are Not Final

Do not overrely on the confirmation-dependent recommendations included in your report. *Confirmation-dependent recommendations are not final,* because geotechnical engineers develop them principally from judgment and opinion. Geotechnical engineers can finalize their recommendations *only* by observing actual subsurface conditions revealed during construction. *The geotechnical engineer who developed your report cannot assume responsibility or liability for the report's confirmation-dependent recommendations if that engineer does not perform the geotechnical-construction observation required to confirm the recommendations' applicability.*

A Geotechnical-Engineering Report Is Subject to Misinterpretation

Other design-team members' misinterpretation of geotechnical-engineering reports has resulted in costly

problems. Confront that risk by having your geotechnical engineer confer with appropriate members of the design team after submitting the report. Also retain your geotechnical engineer to review pertinent elements of the design team's plans and specifications. Constructors can also misinterpret a geotechnical-engineering report. Confront that risk by having your geotechnical engineer participate in prebid and preconstruction conferences, and by providing geotechnical construction observation.

Do Not Redraw the Engineer's Logs

Geotechnical engineers prepare final boring and testing logs based upon their interpretation of field logs and laboratory data. To prevent errors or omissions, the logs included in a geotechnical-engineering report should *never* be redrawn for inclusion in architectural or other design drawings. Only photographic or electronic reproduction is acceptable, *but recognize that separating logs from the report can elevate risk.*

Give Constructors a Complete Report and Guidance

Some owners and design professionals mistakenly believe they can make constructors liable for unanticipated subsurface conditions by limiting what they provide for bid preparation. To help prevent costly problems, give constructors the complete geotechnical-engineering report, *but* preface it with a clearly written letter of transmittal. In that letter, advise constructors that the report was not prepared for purposes of bid development and that the report's accuracy is limited; encourage them to confer with the geotechnical engineer who prepared the report (a modest fee may be required) and/or to conduct additional study to obtain the specific types of information they need or prefer. A prebid conference can also be valuable. *Be sure constructors have sufficient time* to perform additional study. Only then might you be in a position to give constructors the best information available to you, while requiring them to at least share some of the financial responsibilities stemming from unanticipated conditions.

Read Responsibility Provisions Closely

Some clients, design professionals, and constructors fail to recognize that geotechnical engineering is far less exact than other engineering disciplines. This lack of understanding has created unrealistic expectations that have led to disappointments, claims, and disputes. To help reduce the risk of such outcomes, geotechnical engineers commonly include a variety of explanatory provisions in their reports. Sometimes labeled "limitations," many of these provisions indicate where geotechnical engineers' responsibilities begin and end, to help others recognize their own responsibilities and risks. *Read these provisions closely.* Ask questions. Your geotechnical engineer should respond fully and frankly.

Environmental Concerns Are Not Covered

The equipment, techniques, and personnel used to perform an *environmental* study differ significantly from those used to perform a *geotechnical* study. For that reason, a geotechnical-engineering report does not usually relate any environmental findings, conclusions, or recommendations; e.g., about the likelihood of encountering underground storage tanks or regulated contaminants. *Unanticipated environmental problems have led to numerous project failures.* If you have not yet obtained your own environmental information, ask your geotechnical consultant for risk-management guidance. *Do not rely on an environmental report prepared for someone else.*

Obtain Professional Assistance To Deal with Mold

Diverse strategies can be applied during building design, construction, operation, and maintenance to prevent significant amounts of mold from growing on indoor surfaces. To be effective, all such strategies should be devised for the *express purpose* of mold prevention, integrated into a comprehensive plan, and executed with diligent oversight by a professional mold-prevention consultant. Because just a small amount of water or moisture can lead to the development of severe mold infestations, many mold- prevention strategies focus on keeping building surfaces dry. While groundwater, water infiltration, and similar issues may have been addressed as part of the geotechnical- engineering study whose findings are conveyed in this report, the geotechnical engineer in charge of this project is not a mold prevention consultant; *none of the services performed in connection with the geotechnical engineer's study were designed or conducted for the purpose of mold prevention. Proper implementation of the recommendations conveyed in this report will not of itself be sufficient to prevent mold from growing in or on the structure involved.*

Rely, on Your GBC-Member Geotechnical Engineer for Additional Assistance

Membership in the Geotechnical Business Council of the Geoprofessional Business Association exposes geotechnical engineers to a wide array of risk-confrontation techniques that can be of genuine benefit for everyone involved with a construction project. Confer with you GBC-Member geotechnical engineer for more information.

GEOTECHNICAL BUSINESS COUNCIL
of the Geoprofessional Business Association

8811 Colesville Road/Suite G106, Silver Spring, MD 20910
Telephone: 301/565-2733 Facsimile: 301/589-2017
e-mail: info@geoprofessional.org www.geoprofessional.org

Copyright 2015 by Geoprofessional Business Association (GBA). Duplication, reproduction, or copying of this document, or its contents, in whole or in part, by any means whatsoever, is strictly prohibited, except with GBA's specific written permission. Excerpting, quoting, or otherwise extracting wording from this document is permitted only with the express written permission of GBA, and only for purposes of scholarly research or book review. Only members of GBA may use this document as a complement to or as an element of a geotechnical-engineering report. Any other firm, individual, or other entity that so uses this document without being a GBA member could be commiting negligent or intentional (fraudulent) misrepresentation.

GENERAL COMMENTS

BASIS OF GEOTECHNICAL REPORT

This report has been prepared in accordance with generally accepted geotechnical engineering practices to assist in the design and/or evaluation of this project. If the project plans, design criteria, and other project information referenced in this report and utilized by SME to prepare our recommendations are changed, the conclusions and recommendations contained in this report are not considered valid unless the changes are reviewed, and the conclusions and recommendations of this report are modified or approved in writing by our office.

The discussions and recommendations submitted in this report are based on the available project information, described in this report, and the geotechnical data obtained from the field exploration at the locations indicated in the report. Variations in the soil and groundwater conditions commonly occur between or away from sampling locations. The nature and extent of the variations may not become evident until the time of construction. If significant variations are observed during construction, SME should be contacted to reevaluate the recommendations of this report. SME should be retained to continue our services through construction to observe and evaluate the actual subsurface conditions relative to the recommendations made in this report.

In the process of obtaining and testing samples and preparing this report, procedures are followed that represent reasonable and accepted practice in the field of soil and foundation engineering. Specifically, field logs are prepared during the field exploration that describe field occurrences, sampling locations, and other information. Samples obtained in the field are frequently subjected to additional testing and reclassification in the laboratory and differences may exist between the field logs and the report logs. The engineer preparing the report reviews the field logs, laboratory classifications, and test data and then prepares the report logs. Our recommendations are based on the contents of the report logs and the information contained therein.

REVIEW OF DESIGN DETAILS, PLANS, AND SPECIFICATIONS

SME should be retained to review the design details, project plans, and specifications to verify those documents are consistent with the recommendations contained in this report.

REVIEW OF REPORT INFORMATION WITH PROJECT TEAM

Implementation of our recommendations may affect the design, construction, and performance of the proposed improvements, along with the potential inherent risks involved with the proposed construction. The client and key members of the design team, including SME, should discuss the issues covered in this report so that the issues are understood and applied in a manner consistent with the owner's budget, tolerance of risk, and expectations for performance and maintenance.

FIELD VERIFICATION OF GEOTECHNICAL CONDITIONS

SME should be retained to verify the recommendations of this report are properly implemented during construction. This may avoid misinterpretation of our recommendations by other parties and will allow us to review and modify our recommendations if variations in the site subsurface conditions are encountered.

PROJECT INFORMATION FOR CONTRACTOR

This report and any future addenda or other reports regarding this site should be made available to prospective contractors prior to submitting their proposals for their information only and to supply them with facts relative to the subsurface evaluation and laboratory test results. If the selected contractor encounters subsurface conditions during construction, which differ from those presented in this report, the contractor should promptly describe the nature and extent of the differing conditions in writing and SME should be notified so that we can verify those conditions. The construction contract should include provisions for dealing with differing conditions and contingency funds should be reserved for potential problems during earthwork and foundation construction. We would be pleased to assist you in developing the contract provisions based on our experience.

The contractor should be prepared to handle environmental conditions encountered at this site, which may affect the excavation, removal, or disposal of soil; dewatering of excavations; and health and safety of workers. Any Environmental Assessment reports prepared for this site should be made available for review by bidders and the successful contractor.

THIRD PARTY RELIANCE/REUSE OF THIS REPORT

This report has been prepared solely for the use of our Client for the project specifically described in this report. This report cannot be relied upon by other parties not involved in the project, unless specifically allowed by SME in writing. SME also is not responsible for the interpretation by other parties of the geotechnical data and the recommendations provided herein.

© 2009 SME

LABORATORY TESTING PROCEDURES

VISUAL ENGINEERING CLASSIFICATION

Visual classification was performed on recovered samples. The appended General Notes and Unified Soil Classification System (USCS) sheets include a brief summary of the general method used visually classify the soil and assign an appropriate USCS group symbol. The estimated group symbol, according to the USCS, is shown in parentheses following the textural description of the various strata on the boring logs appended to this report. The soil descriptions developed from visual classifications are sometimes modified to reflect the results of laboratory testing.

MOISTURE CONTENT

Moisture content tests were performed by weighing samples from the field at their in-situ moisture condition. These samples were then dried at a constant temperature (approximately 110º C) overnight in an oven. After drying, the samples were weighed to determine the dry weight of the sample and the weight of the water that was expelled during drying. The moisture content of the specimen is expressed as a percent and is the weight of the water compared to the dry weight of the specimen.

HAND PENETROMETER TESTS

In the hand penetrometer test, the unconfined compressive strength of a cohesive soil sample is estimated by measuring the resistance of the sample to the penetration of a small calibrated, spring-loaded cylinder. The maximum capacity of the penetrometer is 4.5 tons per square-foot (tsf). Theoretically, the undrained shear strength of the cohesive sample is one-half the unconfined compressive strength. The undrained shear strength (based on the hand penetrometer test) presented on the boring logs is reported in units of kips per square-foot (ksf).

TORVANE SHEAR TESTS

In the Torvane test, the shear strength of a low strength, cohesive soil sample is estimated by measuring the resistance of the sample to a torque applied through vanes inserted into the sample. The undrained shear strength of the samples is measured from the maximum torque required to shear the sample and is reported in units of kips per square-foot (ksf).

LOSS-ON-IGNITION (ORGANIC CONTENT) TESTS

Loss-on-ignition (LOI) tests are conducted by first weighing the sample and then heating the sample to dry the moisture from the sample (in the same manner as determining the moisture content of the soil). The sample is then re-weighed to determine the dry weight and then heated for 4 hours in a muffle furnace at a high temperature (approximately 440º C). After cooling, the sample is re-weighed to calculate the amount of ash remaining, which in turn is used to determine the amount of organic matter burned from the original dry sample. The organic matter content of the specimen is expressed as a percent compared to the dry weight of the sample.

ATTERBERG LIMITS TESTS

Atterberg limits tests consist of two components. The plastic limit of a cohesive sample is determined by rolling the sample into a thread and the plastic limit is the moisture content where a 1/8-inch thread begins to crumble. The liquid limit is determined by placing a ½-inch thick soil pat into the liquid limits cup and using a grooving tool to divide the soil pat in half. The cup is then tapped on the base of the liquid limits device using a crank handle. The number of drops of the cup to close the gap formed by the grooving tool ½ inch is recorded along with the corresponding moisture content of the sample. This procedure is repeated several times at different moisture contents and a graph of moisture content and the corresponding number of blows is plotted. The liquid limit is defined as the moisture content at a nominal 25 drops of the cup. From this test, the plasticity index can be determined by subtracting the plastic limit from the liquid limit.

© 2009 SME

Passionate People Building and Revitalizing our World

SME

Abonmarche Consultants, Inc.

95 West Main Street
Benton Harbor, Michigan 49022

Utility Corridor Investigation Report

for the

Main Pump Station & Black River Street Reconstruction Project

South Haven, Michigan

May 5, 2016

Project #16-097

Villa Environmental Consultants, Inc.

Villa Environmental Consultants, INC

215 Colfax Avenue • Benton Harbor, MI 49022 • Phone 269.927.2434 • www.villaenv.com

May 5, 2016

Chris Cook, PE, President/C.E.O.
Abonmarche, Inc.
95 W. Main Street
Benton Harbor, MI 49022

RE: Utility Corridor Investigation Report
Main Pump Station & Black River Street Reconstruction Project
South Haven, MI 49090
Project #16-097

Dear Mr. Cook:

Enclosed is the Utility Corridor Investigation Report for the Main Pump Station & Black River Street Reconstruction Project in South Haven, Michigan. This report summarizes the field investigation conducted at the site on April 14, 2016. The findings and recommendations generated from the soil, sediment, and groundwater sampling are included in this report.

If you should have any questions or wish to further discuss this project, please contact our office at (269) 927-2434 at your convenience.

Yours truly,

Richard P. Villa

Richard P. Villa, President
rvilla@villaenv.com

RPV: reg

Enc.

Utility Corridor Investigation Report

1.0 Summary

Villa Environmental Consultants, Inc. was contracted by Abonmarche Consultants, Inc. to complete a utility corridor investigation along the proposed route for the planned main pump station and Black River Street reconstruction project located in South Haven, Michigan. This investigation was completed in response to known and/or suspected sources of contamination which may have the potential to impact the soils, sediments, and/or groundwater encountered during the completion of the proposed project.

The following conclusions and recommendations were derived from the investigative activities completed at the project site during the April 14, 2016 investigation:

1. Subsurface soils and drainage ditch sediments contain elevated levels of heavy metals, particularly Arsenic and Lead, the concentrations of which exceed applicable Part 201 Direct contact Criteria (DCC), Drinking Water Protection Criteria (DWPC), and Groundwater Surface Water Interface Protection Criteria.

    a. With soils and sediments potentially exceeding DCC, a project health and safety plan (HASP) must be developed and implemented pursuant to the protection of worker safety. The HASP should include the use of OSHA Level-D personal protection equipment (PPE) and the proper decontamination of equipment to prevent exacerbation of contaminants via the accidental transport of soils from the project site.

    b. All excavated soils should be staged near the excavation trench and used as backfill at the locations they were generated. Excess soils that cannot be used as backfill can not be relocated off site due to their exceedance of Part 201 DWPC and/or Groundwater Surface Water Interface Protection Criteria (GSIPC) and therefore must be sufficiently de-watered and disposed at a Type II landfill as non-hazardous waste.

2. Groundwater throughout the site contains elevated concentrations of heavy metals which exceed applicable Part 201 Drinking Water Criteria (DWC) and Groundwater Surface Water Interface Criteria (GSI).

    a. We provided our analytical results to the South Haven City Engineer, the South Haven Wastewater Treatment Plant (WWTP) Operator and the Michigan Department of Environmental Quality (DEQ) Industrial Storm Water Staff to determine options for handling groundwater generated during this project. The DEQ Storm Water Permit Section Staff will review this data to determine whether discharging this material into the environment (through storm sewers, surface waters, groundwater or other means) will be allowed and if a permit is required.

3. A project Environmental Fact Sheet will be developed for use after the excavation, de-watering, and groundwater management plans have been finalized and agreed upon by all of the involved organizations.

Figure 1 - Soil Boring /Sample Location Map, provided in Appendix A of this report, depicts the general locations of all soil borings and samples collected according to the scope of this investigation.

2.0 Background Information

Villa Environmental Consultants, Inc. contracted Earth Solutions, Inc. to provide Geoprobe services for the completion of fifteen (15) soil borings (SB-1 through SB 15) located at approximate 150 foot internals along the proposed utility corridor. Each soil boring was extended to a total depth of approximately eight (8) feet below ground surface (bgs) for the collection of fifteen (15) soil and fifteen (5) groundwater samples for laboratory analysis to assess the potential for environmental impact.

The investigation also included the collection of four (4) sediment samples (SED-1 through SED-4) of sediments which have accumulated within an open stormwater drainage ditch located to the east of East Wells Street.

Three (3) composite soil samples (Waste Composite SB-2-5, Waste Composite SB-6-9, and Waste Composite SB-10-14) were collected for waste characterization purposes pursuant to the possible need to dispose of trench spoils that may be generated via the proposed utility excavations.

3.0 Subsurface Investigation

Soils and Sediments

Soil borings at each of the fifteen (15) boring locations were conducted utilizing a Geoprobe direct push, hydraulic driven drilling rig. A continuous core sample was advanced from the surface to a depth of 5 feet bgs for the examination and collection of subsurface soils. The recovered vadose soils were examined for indications of staining or odors which may be potentially indicative of environmental impact. The soils were also field screened utilizing a Photo-Ionization Detector (PID), which measures the presence of Volatile Organic Compounds (VOCs) in parts per million (ppm). At each boring location, a sample of the subsurface soil was collected from a depth interval of 3-4 feet bgs (immediately above the water table), preserved in accordance with Michigan Department of Environmental Quality (MDEQ) and EPA sampling protocol, logged on a sample chain of custody, and submitted to ALS Environmental Laboratories for analysis of heavy metals, VOCs, and Semi-Volatile Organic Compounds (SVOCs). All sampling materials and Geoprobe tooling were decontaminated in between each successive soil boring.

Each of the four (4) sediment samples collected from the open stormwater drainage ditch was obtained utilizing a hand shovel and stainless steel sampling trowel. A representative sediment

sample was collected from each sampling location for laboratory analysis of concentrations of heavy metals, VOCs, SVOCs, and polychlorinated biphenys (PCBs).

Vadose soils from soil borings SB-2 through SB-5, SB-6 through SB-9, and SB-10 through SB-14 were collected and mixed to form the respective composite samples, which were submitted for EPA Toxicity Characteristic Leaching Procedure (TCLP) analysis for metals, VOCs, and SVOCs. The TCLP analysis is utilized in determining appropriate transportation and waste disposal measures for potentially hazardous wastes.

Groundwater

Groundwater was encountered at an approximate depth of 4 feet bgs at each of the fifteen (15) soil boring locations. A stainless steel slotted screen was advanced via Geoprobe to span a depth interval of 5-8 feet bgs at each soil boring location for the collection of a groundwater sample for laboratory analysis of metals, VOCs, and SVOCs. Groundwater was collected utilizing a peristaltic pump and new polyethylene tubing at each sampling location and field preserved in accordance with applicable EPA and MDEQ sampling protocol.

3.1 Geological Observations

Vadose soils encountered within each of the fifteen (15) soil boring locations generally consisted of a mixture of fine grained sand with various amounts of fill materials including demolition debris, and gritty, glassy materials typical of foundry sands. Some of soil borings contained varying amounts of peat, indicative of former swampy conditions of the area. Groundwater was encountered consistently at approximately 4 feet bgs at each soil boring location. No constructive layer such as silts or clays were encountered in any of the soil pits.

4.0 Laboratory Analysis

Vadose Soil Samples

Table 1 - Soil Analytical Results, provided in Appendix B of this report, summarizes the laboratory analytical results of the fifteen (15) soil samples collected from their respective soil boring locations. In general, each of the soil samples contained detectable concentrations of heavy metals. In particular, concentrations of Arsenic, Barium, Cadmium, Lead, Mercury, Selenium, and Silver (or some combination thereof) were elevated above applicable Part 201 DWPC and/or GSIPC at soil boring locations SB-2, SB-3, SB-4, SB-5, SB-6, SB-7, SB-8, SB-11, and SB-13. DWPC and GSIPC are applicable to the management and/or possible relocation of these soils.

Soils at SB-6 and SB-7 contained Arsenic concentrations exceeding DCC. Soils at SB-6 also contained Lead concentrations exceeding DCC for Lead. With soils exceeding DCC for Arsenic and Lead, workers that may potentially exposed to the soils during the project construction activities will need to don Level D PPE and follow appropriate health and safety protocol (no smoking or eating at the site, washing hands after handling any soils, decontaminating boots and clothing at the site to prevent off-site exposure, etc.) as part of a project-specific health and safety plan to be developed and implemented for the project.

As presented in Table 1, there were some minor detections of SVOCs and VOCs within the soils and none of the concentrations exceeded any applicable criteria. All other analytical parameters not listed in Table 1 were non-detect for all soil samples. No concentrations of any parameter in any of the soil samples collected exceeded the MDEQ Particulate Soil Inhalation Criteria (PSIC) for soils. A complete copy of the laboratory analytical report is provided in Appendix C of this report.

Sediment Samples

Table 2 - Drain Sediment Analytical Results, provided in Appendix B, summarizes the analytical results of the four (4) sediment samples collected from the open stormwater drain, the locations of which are depicted in Figure 1.

Various metals concentrations were detected in each of the sediment samples but none of the samples exceed DCC or PSIC. Only concentrations of Mercury in samples SED-1, SED-2, and SED-4 exceeded GSIPC. All other analytes for the four (4) drainage ditch sediment samples were either non-detect or below any applicable Part 201 criteria. The sediment samples were collected from an approximate depth of 6 to 18 inches bgs. It is likely that contaminant levels of deeper sediment and subsurface soils below the drainage ditches are similar to that of the soils encountered in the fifteen (15) soils samples collected throughout the project. Therefore, any excavated sediments from the drainage ditches should be managed with the same protocol as the soils excavated from the utility trenches.

Groundwater Samples

Groundwater sample results are summarized in Table 3 - Groundwater Analytical Results, located in Appendix B. None of the groundwater samples contained detectable concentrations of any VOCs or SVOCs. Various detectable metals concentrations were present in each of the fifteen (15) groundwater samples. In general, groundwater throughout the project site contains elevated concentrations of Arsenic, Barium, Cadmium, Chromium, Lead, Mercury, Selenium, and Silver exceeding Part 201 DWC and/or GSI. Due to the relatively high water table, it is expected that groundwater will be encountered throughout the project site during the completion of proposed utility construction activities. If any groundwater is to be withdrawn from the excavation trench or generated via de-watering of saturated soils, and is not to be returned back to the trench, it will need to be treated and disposed at the wastewater treatment facility, if agreed upon by the City of South Haven. If the City of South Haven can not accept the generated wastewater, then an on-site treatment system may be put into operation in accordance with applicable wastewater treatment and discharge regulations.

Waste Composite Samples

TCLP analysis for each of the three (3) representative waste composite samples, along with the other soil and sediment analytical data generated from the sampling presented in this report, indicates that vadose soils generated via the proposed utility corridor excavations would be characterized as non-hazardous waste and may be transported to a Type II landfill for disposal. Therefore, all vadose soils which cannot be used as backfill in the utility trenches from which they were generated should be

disposed at a Type II landfill. Saturated soils which cannot be used as backfill must be sufficiently de-watered before they can be transported to the Type II landfill for disposal.

4.1 Sample Methodology

Soil samples were preserved in sample containers based on approved laboratory methods, placed into a cooler with ice, and tracked via chain of custody protocol. The samples were shipped via laboratory courier to ALS Environmental Laboratory (ALS), located in Holland, Michigan. Sample analysis was based on historic, potential contamination sources at the subject property. Samples were analyzed for:

- Metals by ICP, Environmental Protection Agency (EPA) Method SW6020A.
- Mercury by CVAA, EPA Method SW7471B (soil) and SW7470A (groundwater).
- VOCs by EPA Method SW8260B.
- SVOCs by EPA Method SW846 8270D.
- PCBs by EPA Method SW8082.

APPENDIX A
Figure 1 – Soil Boring/Sample Location Map

● = Soil Boring Location ● = Storm Drain Sediment Sample Location — = Approximate Utility Corridor Location

Villa Environmental Consultants, Inc.

SOIL BORING / SAMPLE LOCATION LOCATION MAP

Project: Abonmarche Consultants
City of South Haven Utility Corridor Investigation
South Haven, MI 49090

Date: April 29, 2016
Project No: #16-097

Scale: N/A
Figure No: 1

APPENDIX B
Table 1 - Soil Analytical Results
Table 2 - Drain Sediment Analytical Results
Table 3 - Groundwater Analytical Results

Table 1
Soil Analytical Results

Analytical Parameter	Soil Boring Location															MDEQ Part 201 Residential Soil Criteria			
	SB-1	**SB-2**	**SB-3**	**SB-4**	**SB-5**	**SB-6**	**SB-7**	**SB-8**	**SB-9**	**SB-10**	**SB-11**	**SB-12**	**SB-13**	**SB-14**	**SB-15**	**DWPC**	**GSIPC**	**PSIC**	**DCC**
METALS:																			
Arsenic	3,000	**7,800**	**4,800**	2,100	2,800	**160,000**	**14,000**	2,800	1,600	620	2,500	ND	3,900	1,600	2,600	4,600	4,600	7.20E+05	7,600
Barium	31,000	77,000	57,000	38,000	27,000	**770,000**	95,000	21,000	17,000	18,000	29,000	12,000	32,000	13,000	22,000	1.30E+06	4.40E+05	3.30E+08	3.70E+07
Cadmium	210	2,200	270	ND	2,100	**25,000**	1,800	220	ND	ND	ND	ND	270	260	ND	6,000	3,000	1.70E+06	5.50E+05
Chromium (total)	5,300	7,100	7,800	10,000	21,000	84,000	9,900	3,800	4,500	2,900	5,300	2,100	5,400	3,800	6,500	1.00E+09	3.0E+09	3.30E+08	7.90E+08
Lead	11,000	330,000	12,000	23,000	180,000	**1,400,000**	170,000	12,000	31,000	3,200	9,100	1,700	46,000	22,000	14,000	7.00E+05	2.50E+06	1.00E+08	4.00E+05
Mercury	ND	ND	ND	ND	ND	**200**	**340**	ND	ND	ND	ND	ND	**93**	ND	ND	1,700	50	2.00E+07	1.60E+05
Selenium	ND	**830**	**1,100**	**1,100**	**1,100**	**26,000**	**1,300**	**1,400**	ND	ND	**780**	ND	**1,100**	ND	ND	4,000	400	1.30E+08	2.60E+06
Silver	ND	ND	ND	ND	ND	**9,600**	ND	ND	ND	ND	ND	ND	ND	ND	ND	4,500	100	6.70E+06	2.50E+06
SVOCs:																			
Benzo(a)anthracene	ND	ND	ND	ND	ND	ND	810	ND	ND	ND	ND	ND	ND	ND	ND	NLL	NLL	ID	20,000
Benzo(a)pyrene	ND	ND	ND	ND	ND	ND	700	ND	ND	ND	ND	ND	ND	ND	ND	NLL	NLL	1.50E+06	8,000
Benzo(b)fluoranthene	ND	ND	ND	ND	ND	ND	970	ND	ND	ND	ND	ND	490	ND	ND	NLL	NLL	ID	20,000
Benzo(g,h,i)perylene	ND	ND	ND	ND	ND	ND	470	ND	ND	ND	ND	ND	ND	ND	ND	NLL	NLL	8.00E+08	2.50E+06
Benzo(k)fluoranthene	ND	ND	ND	ND	ND	ND	370	ND	ND	ND	ND	ND	ND	ND	ND	NLL	NLL	ID	2.00E+05
Chrysene	ND	ND	ND	ND	ND	ND	900	ND	ND	ND	ND	ND	370	ND	ND	NLL	NLL	ID	2.00E+06
Fluoranthene	ND	ND	ND	ND	ND	ND	1,800	440	ND	ND	ND	ND	610	ND	360	7.30E+05	5,500	9.30E+09	4.60E+07
Indeno(1,2,3-cd)pyrene	ND	ND	ND	ND	ND	ND	490	ND	ND	ND	ND	ND	ND	ND	ND	NLL	NLL	ID	20,000
Naphthalene	ND	ND	ND	ND	360	ND	ND	ND	ND	ND	ND	ND	ND	ND	ND	35,000	730	2.00E+08	1.60E+07
Phenanthrene	ND	ND	ND	ND	ND	ND	1,000	ND	ND	ND	ND	ND	ND	ND	ND	56,000	2,100	6.70E+06	1.60E+06
Pyrene	ND	ND	ND	ND	ND	ND	1,500	390	ND	ND	ND	ND	560	ND	ND	4.80E+05	ID	6.70E+09	2.90E+07
VOCs:																			
1,2,4-Trimethylbenzene	ND	ND	220	ND	ND	ND	ND	ND	ND	ND	ND	ND	ND	ND	ND	2,100	570	8.20E+10	3.20E+07
2-Methylnaphthalene	ND	ND	360	ND	ND	ND	ND	ND	ND	ND	ND	ND	ND	ND	ND	57,000	4,200	6.70E+08	8.10E+06
Methylene Chloride	ND	ND	ND	ND	ND	ND	ND	ND	ND	ND	ND	ND	150	ND	ND	100	30,000	6.60E+09	1.30E+06
Xylenes (total)	ND	ND	450	ND	ND	ND	ND	ND	ND	ND	ND	ND	ND	ND	ND	5,600	820	2.90E+11	4.10E+08

All values are in µg/Kg
ID = Inadequate data to develop criterion
NLL = Chemical is not likely to leach under most soil conditions
NLV = Chemical is not likely to volatilize under most conditions
BOLD = Exceeds one or more applicable Part 201 criteria
DWPC = Drinking Water Protection Criteria
GSIPC = Groundwater Surface Water Interface Protection Criteria
PSIC = Particulate Soil Inhalation Criteria
DCC = Direct Contact Criteria

Table 2
Drain Sediment Analytical Results

Analytical Parameter	Sediment Sample Location				MDEQ Part 201 Residential Soil Criteria			
	SED-1	**SED-2**	**SED-3**	**SED-4**	**DWPC**	**GSIPC**	**PSIC**	**DCC**
METALS:								
Arsenic	3,500	1,900	3,500	4,500	4,600	4,600	7.20E+05	7,600
Barium	31,000	33,000	44,000	58,000	1.30E+06	4.40E+05	3.30E+08	3.70E+07
Cadmium	890	770	970	ND	6,000	3,000	1.70E+06	5.50E+05
Chromium (total)	8,300	5,200	23,000	7,600	1.00E+09	3.0E+09	3.30E+08	7.90E+08
Lead	42,000	65,000	50,000	69,000	7.00E+05	2.50E+06	1.00E+08	4.00E+05
Mercury	**58**	**86**	ND	**120**	1,700	50	2.00E+07	1.60E+05
Selenium	ND	ND	ND	ND	4,000	400	1.30E+08	2.60E+06
Silver	ND	ND	ND	ND	4,500	100	6.70E+06	2.50E+06
SVOCs:								
Benzo(a)anthracene	540	340	ND	930	NLL	NLL	ID	20,000
Benzo(a)pyrene	670	ND	ND	1,000	NLL	NLL	1.50E+06	8,000
Benzo(b)fluoranthene	850	360	ND	1,300	NLL	NLL	ID	20,000
Benzo(g,h,i)perylene	560	ND	ND	920	NLL	NLL	8.00E+08	2.50E+06
Benzo(k)fluoranthene	390	ND	ND	580	NLL	NLL	ID	2.00E+05
Chrysene	520	ND	ND	1,100	NLL	NLL	ID	2.00E+06
Fluoranthene	870	510	ND	1,700	7.30E+05	5,500	9.30E+09	4.60E+07
Indeno(1,2,3-cd)pyrene	550	ND	ND	860	NLL	NLL	ID	20,000
2-Methylnaphthalene	ND	ND	ND	370	57,000	4,200	6.70E+08	8.10E+06
Naphthalene	ND	ND	ND	ND	35,000	730	2.00E+08	1.60E+07
Phenanthrene	ND	ND	ND	930	56,000	2,100	6.70E+06	1.60E+06
Pyrene	780	470	ND	1,600	4.80E+05	ID	6.70E+09	2.90E+07

All values are in µg/Kg
ID = Inadequate data to develop criterion
NLL = Chemical is not likely to leach under most soil conditions
NLV = Chemical is not likely to volatilize under most conditions
BOLD = Exceeds one or more applicable Part 201 criteria
DWPC = Drinking Water Protection Criteria
GSIPC = Groundwater Surface Water Interface Protection Criteria
PSIC = Particulate Soil Inhalation Criteria
DCC = Direct Contact Criteria

Table 3
Groundwater Analytical Results

Analytical Parameter	Soil Boring Location															Part 201 Residential GroundwaterCriteria	
	SB-1	**SB-2**	**SB-3**	**SB-4**	**SB-5**	**SB-6**	**SB-7**	**SB-8**	**SB-9**	**SB-10**	**SB-11**	**SB-12**	**SB-13**	**SB-14**	**SB-15**	**DWC**	**GSIC**
METALS:																	
Arsenic	**13**	**37**	**35**	**56**	**16**	**110**	**190**	**200**	**60**	**35**	**150**	**23**	**49**	**38**	**100**	10	10
Barium	600	620	**2,100**	**1,300**	620	**4,800**	**4,900**	**1,500**	ND	510	**1,500**	620	**990**	**730**	**3,200**	2,000	670
Cadmium	1.4	ND	**30**	**9.4**	2.5	**44**	**290**	**82**	ND	2.1	**5.1**	1.3	**3.2**	2.3	**6.8**	5	2.5
Chromium (total)	**140**	57	**190**	95	100	**130**	**280**	**250**	14	96	**310**	**130**	**260**	**120**	**230**	100	100
Lead	**62**	**22**	**5,000**	**1,100**	**240**	**5,400**	**56,000**	**3,200**	**11**	**110**	**910**	**98**	**290**	**460**	**1,200**	4	14
Mercury	**0.24**	ND	**0.99**	**1.0**	ND	**0.78**	**17**	**0.40**	ND	**0.22**	**1.0**	**0.34**	**0.35**	**0.49**	**3.1**	2.0	0.0013
Selenium	**5.1**	ND	ND	**5.2**	ND	**6.3**	**30**	**8.4**	ND	ND	**16**	ND	**8.8**	**6.9**	**18**	50	5
Silver	**0.47**	ND	**3.8**	**4.7**	**0.39**	**2.7**	**26**	**3.0**	ND	ND	**0.52**	**0.22**	**0.59**	**0.29**	**0.56**	34	0.2

All values are in µg/L
ID = Inadequate data to develop criterion
NLL = Chemical is not likely to leach under most soil conditions
NLV = Chemical is not likely to volatilize under most conditions
BOLD = Exceeds one or more applicable Part 201 criteria
DWC = Drinking Water Criteria
GSIC = Groundwater Surface Water Interface Criteria